Dec. 23, 1930. C. D. O'CONNOR 1,785,971

MAN POWER HORSE BOAT

Filed April 2, 1928 4 Sheets-Sheet 1

Fig. 1.

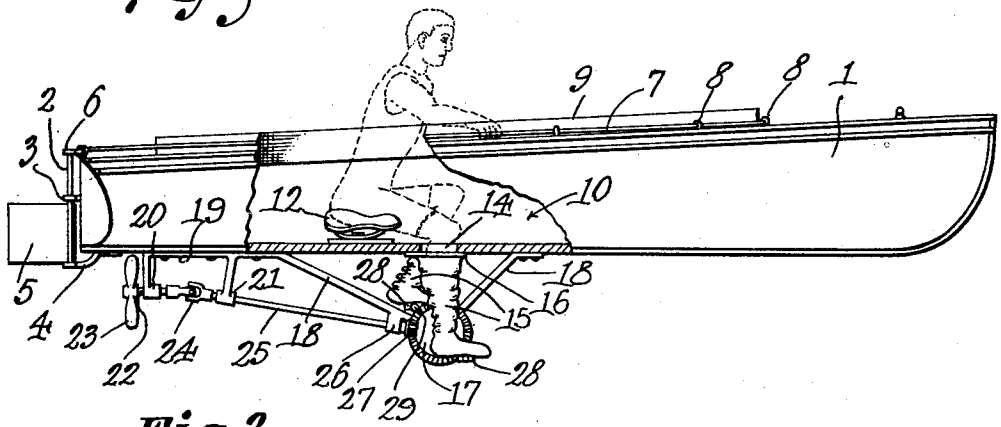

Fig. 2.

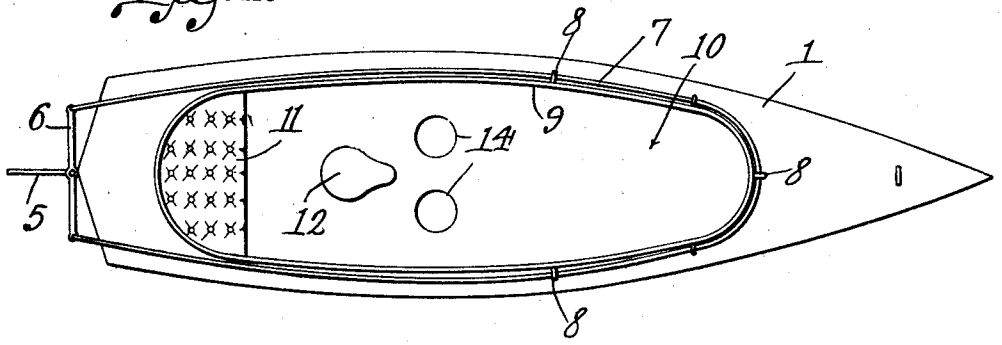

Fig. 3.

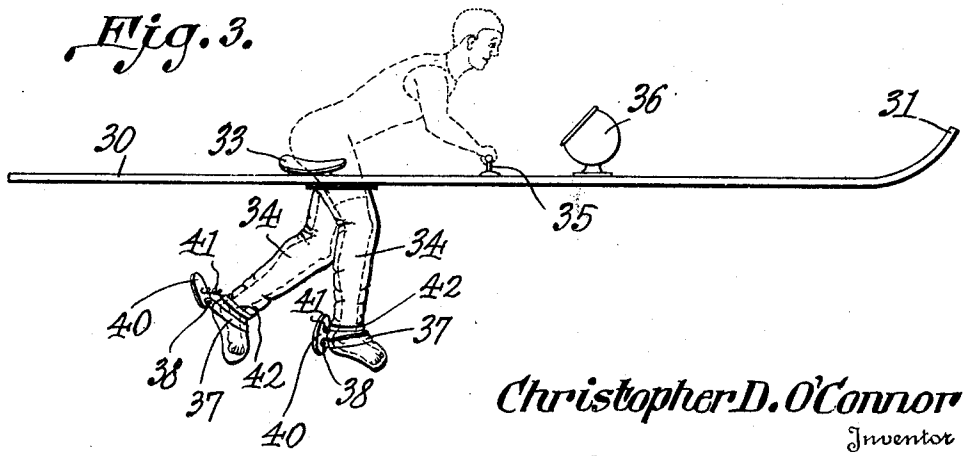

Christopher D. O'Connor
Inventor

By C. A. Snow & Co.
Attorneys

Dec. 23, 1930. C. D. O'CONNOR 1,785,971

MAN POWER HORSE BOAT

Filed April 2, 1928 4 Sheets-Sheet 2

Fig. 4.

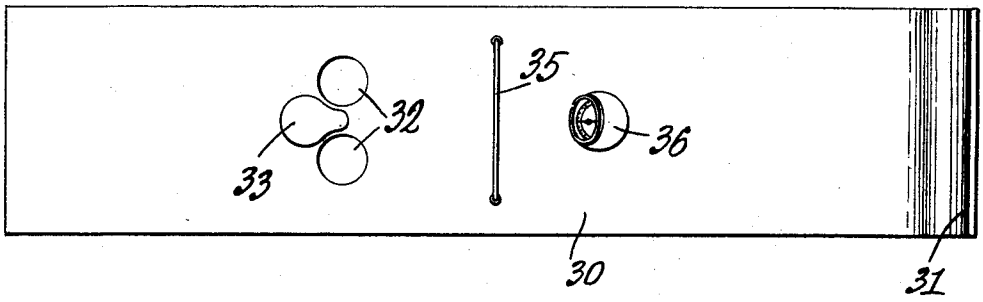

Fig. 5.

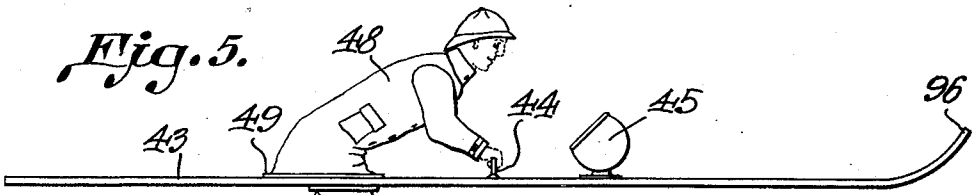

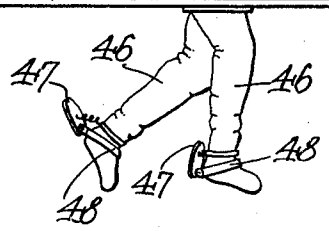

Fig. 6.

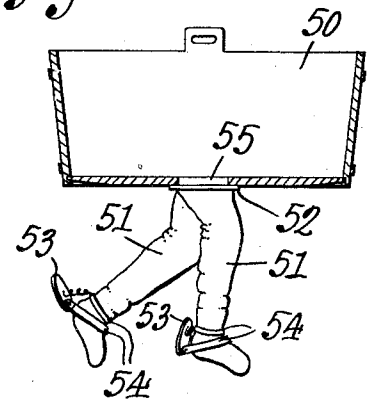

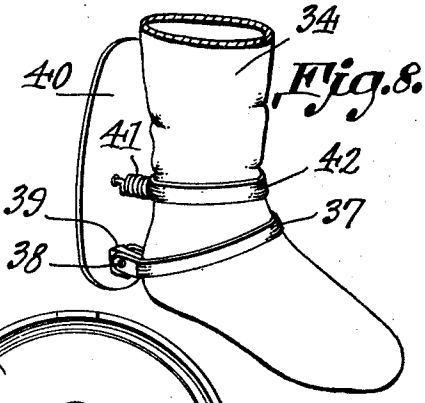

Fig. 8.

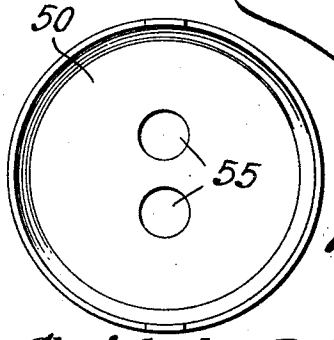

Fig. 7.

Christopher D. O'Connor
Inventor

By Cashow & Co.
Attorneys

Dec. 23, 1930. C. D. O'CONNOR 1,785,971

MAN POWER HORSE BOAT

Filed April 2, 1928 4 Sheets-Sheet 3

Fig. 9.

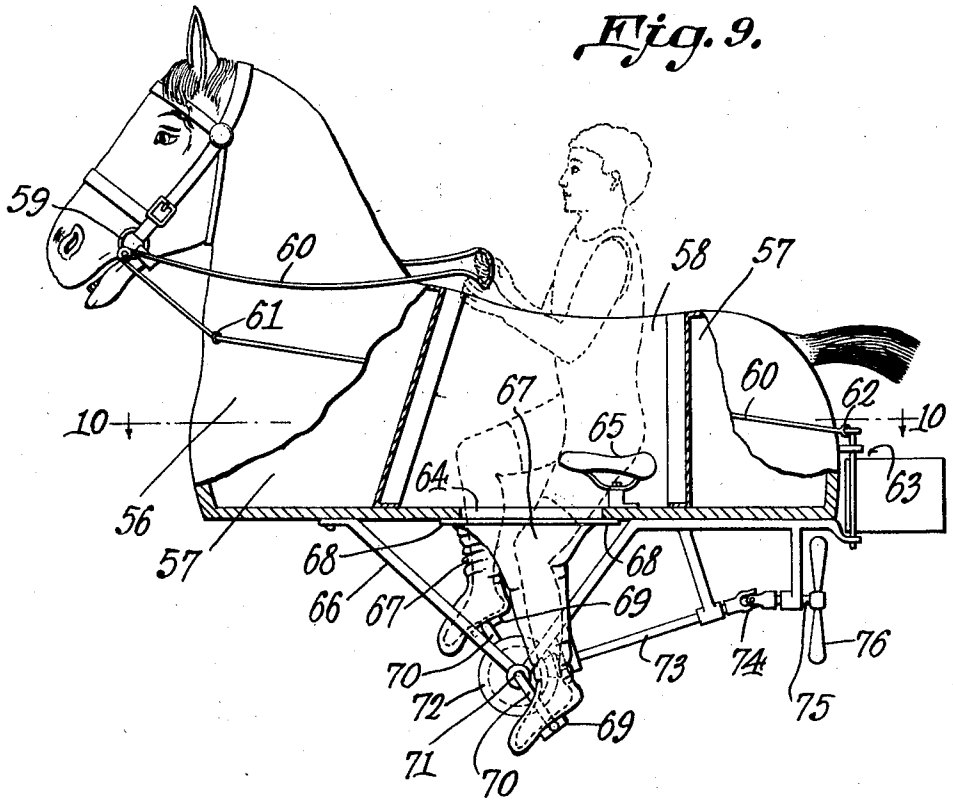

Fig. 10.

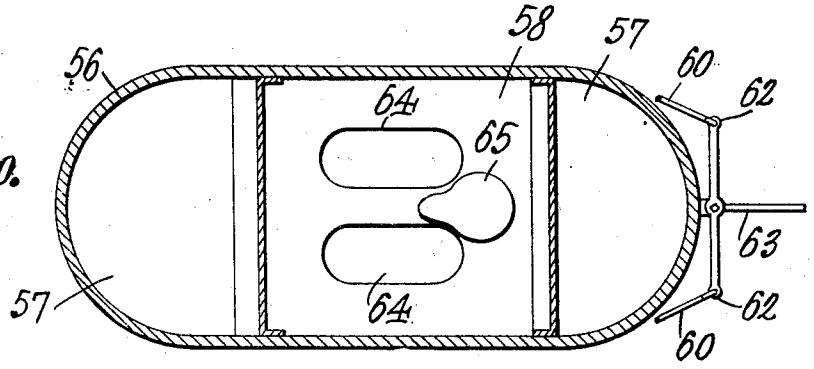

Christopher D. O'Connor
Inventor

By C. A. Snow & Co.
Attorneys

Dec. 23, 1930. C. D. O'CONNOR 1,785,971

MAN POWER HORSE BOAT

Filed April 2, 1928 4 Sheets-Sheet 4

Fig. 11.

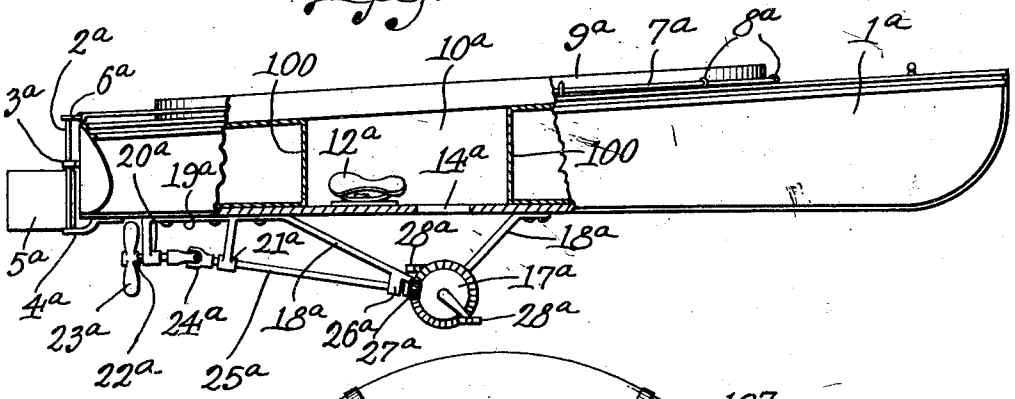

Fig. 12.

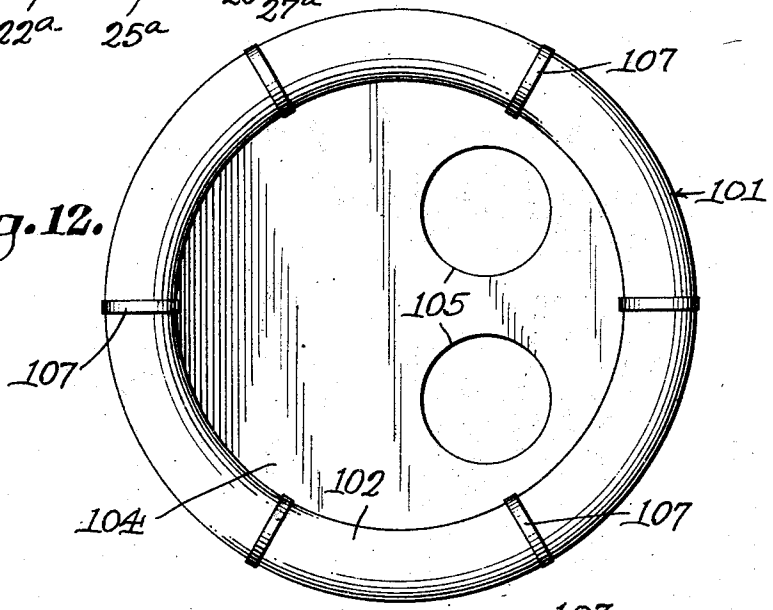

Fig. 13.

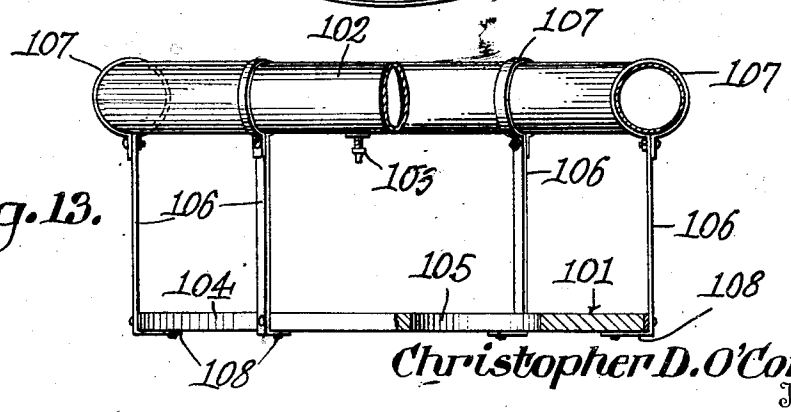

Christopher D. O'Connor
Inventor

By Cachow & Co.
Attorneys

Patented Dec. 23, 1930 1,785,971

UNITED STATES PATENT OFFICE

CHRISTOPHER D. O'CONNOR, OF SANTA BARBARA, MEXICO

MAN-POWER HORSE BOAT

Application filed April 2, 1928. Serial No. 266,665.

This invention aims to provide a novel means whereby a person may propel a boat without resorting to complicated machinery, the word "boat" being taken to mean any buoyant object adapted to carry a navigator.

It is within the province of the disclosure to improve generally and to enhance the utility of devices of that type to which the invention appertains.

With the above and other objects in view which will appear as the description proceeds, the invention resides in the combination and arrangement of parts and in the details of construction hereinafter described and claimed, it being understood that changes in the precise embodiment of the invention herein disclosed, may be made within the scope of what is claimed, without departing from the spirit of the invention.

In the drawings:—

Figure 1 shows in side elevation, a device constructed in accordance with the invention, parts being broken away, and parts being in section;

Figure 2 is a top plan of the structure shown in Figure 1;

Figure 3 is a side elevation disclosing a modified form of the invention;

Figure 4 is a top plan of the structure shown in Figure 3;

Figure 5 is a side elevation disclosing a modification;

Figure 6 is a sectional view illustrating a modification;

Figure 7 is a top plan of the structure shown in Figure 6;

Figure 8 is a perspective view showing the propelling means employed in several different forms of the invention;

Figure 9 is a side elevation showing a modified form of the invention, parts being broken away, and parts being in elevation;

Figure 10 is a section on the line 10—10 of Figure 9;

Figure 11 shows in side elevation, with parts broken away, a device constructed in accordance with the invention and made somewhat like the structure shown in Figure 1 of the drawings;

Figure 12, parts being broken away, is a top plan showing a modification; and

Figure 13 shows in side elevation, the device that is made the subject matter of illustration in Figure 12.

Referring to Figures 1 and 2, there is shown a vessel including a hull 1. The rudder post 2 is mounted in a gudgeon 3 and in a skeg 4 on the hull and carries the rudder 5, the yoke on the rudder post being marked by the numeral 6. To the ends of the yoke 6 are connected a yoke line 7 that is rove through fairleaders 8 mounted on the deck of the vessel, about the coaming 9 that surrounds the cockpit 10, there being an after thwart 11 in the cockpit, and amidship seat 12 being mounted on the bottom of the vessel, within the cockpit 10. Holes 14 are formed in the bottom of the hull 1, and the seat 12 is located a little abaft of the holes 14, as Figure 2 will clearly show. Depending flexible waterproof socks 15 are secured at their upper ends, as indicated at 16, to the bottom of the hull 1, and surround the openings 14.

A vertically disposed gear wheel 17 is supported for rotation on a frame 18 secured to the bottom of the boat, the frame 18 including a rearwardly extended arm 19 provided with depending bearings 20 and 21. A shaft section 22 is journaled in the bearing 20, and carries a propeller 23. By means of a universal joint 24, the forward end of the shaft section 25 is connected to the after end of a shaft section 22 that is journaled in the bearing 21 and also in a bearing 26 which extends downwardly from a part of the frame 18. There is a beveled pinion 27 secured to the forward end of the shaft 25, and the beveled pinion 27 meshes with the gear wheel 17. The shaft that supports the gear wheel 17 for rotation is provided with arms 29 carrying pedals 28.

In practical operation, the person handling the boat assumes a sitting posture on the seat 12 and sticks his legs down through the holes 14, into the flexible waterproof socks 15, the feet of the operator encased within the socks 15, being placed on the pedals 28. By means of the pedals 28, rotation is imparted to the gear wheel 17, and the gear wheel 17 rotates the shaft section 25 by way of the beveled pin-

ion 27. The universal joint 24 transmits rotation from the shaft section 25 to the shaft section 22, and the propeller 23 is operated either to advance the vessel through the water, or to set the vessel aback, as may be desired. The person in charge of the boat can reach the yoke lines 7 readily, as indicated in Figure 1 of the drawings, and in this way the vessel may be set on a course and steered wherever desired.

In the form shown in Figures 3 and 4, the hull 30 is in the form of a flat board or similarly shaped buoyant object, provided with an upwardly inclined prow 31. The holes 32 correspond to the holes 14 of Figure 2. The seat 33 corresponds to the seat 12. Flexible depending waterproof socks 34 are secured to the hull 30, about the holes 32, as hereinbefore described. A handle 35 is secured to the hull 30 forward of the holes 32, and a compass binnacle 36 may be mounted on the hull 30 at any accessible point, so that the operator may steer a compass course should he find it convenient or desirable to do so. Suspension bands 37 are secured to the socks 34 and to the bands 37 are pivoted at 38, ears 39 on thrust plates 40 connected by retractile springs 41 with anchoring bands 42 secured to the socks 34 above the supporting bands 37.

The operator occupies the seat 33 and places his legs in the socks 34. By a proper movement of the legs, the vessel may be propelled. On the forward movement of the legs, the springs 41 yield, allowing the thrust plates 40 to swing back, so that they will not unduly impede the movement of the legs of the operator through the water. So soon, however, as the operator begins the backward thrust with the legs, the thrust plates 40 swing upwardly into the position shown in Figure 8 and enable the operator to acquire a hold on the water which will enable him to propel the vessel rapidly. The operator steadies himself by easing the handle 35, in a way which will be understood readily by those skilled in the art when Figure 3 of the drawings is examined. When the navigator reaches shallow water, he can, of course, walk along the bottom, and step out of the socks 34 at his will.

In Figure 5 of the drawings, the hull 43 is of the general kind shown at 30. The handle appears at 44, the binnacle at 45, and the upturned prow at 96. The flexible waterproof socks are shown at 46. The thrust plates 47 are mounted at 48 on the socks 46, in the way hereinbefore described. A jacket 48 is secured at 49 to the hull 43 above the socks 46 The jacket 48 is flexible and waterproof.

The general method of operation of the form shown in Figure 5 does not differ much from the operation of the form depicted in Figure 3. The operator thrusts his legs into the socks 46 and buttons his trunk in the jacket 48. The form shown in Figure 5 of the drawings is desirable, when, owing to the inclemency of the weather, or the season of the year, more protection is desired than is afforded by the form shown in Figure 3 of the drawings, the socks 34 of Figure 3 being used without the jacket 48 which is disclosed in Figure 5.

In the form shown in Figure 6, the hull 50 is in the form of a tub, to which the waterproof socks 51 are secured at 52, the thrust plates appearing at 53 and being connected at 54 to the socks 51 in the way shown in Figure 8 of the drawings. The holes in the bottom of the hull 50 which communicate with the socks 51, are shown at 55.

The operator places his legs in the socks 51 through the holes 55 and propels the craft like the structure shown in Figures 5 and 3. The operator, of course, can proceed by walking on the bottom or kicking himself along, if the water is shallow enough.

In Figure 9 there is shown a form of the invention wherein the possibilities of the structure, as an amusement device, are accentuated. The hull 56 is shaped like the body of a horse, and is provided, fore and aft, with air-tight compartments 57, between which the cockpit 58 is located. The numeral 59 represents rings which resemble the bit rings on a bridle, and through the rings 59 are slidably extended the yoke lines 60. The yoke lines 60 are readily accessible to a person in the cockpit 58, as Figure 9 will show. After passing through the rings 59, the yoke lines 60 are extended rearwardly through guides 61 on the hull or body, the rear ends of the yoke lines 60 being connected at 62, to the rudder mechanism which, as a whole, is marked by the numeral 63.

There are elongated openings 64 in the bottom of the vessel, within the cockpit 58 and within the cockpit, on the bottom of the vessel is located a seat 65. A frame 66 is connected to the bottom of the vessel and is constructed like the frame 18 shown in Figure 1 and hereinbefore described. The flexible waterproof socks 67 are secured at 68 to the bottom of the vessel, around the holes 64. The operator, occupying the seat 65, can reach the yoke lines 60 and steer the vessel, the legs of the operator being disposed in the waterproof socks, and the feet of the operator, enclosed within the socks being placed on pedals 69 connected to arms 70 on a shaft 71 journaled in a frame 66, the shaft 71 driving the gear 72 like the gear 17, the gear 72 operating, like the gear 17 of Figure 1, to impart rotation to a shaft section 73 supported for rotation on the frame 66 and connected by a universal joint 74 with a shaft section 75 journaled on the frame 66 and carrying the propeller 76.

The operation of the device shown in Figure 9 of the drawings will be understood readily from what has been stated hereinbe-

fore in connection with the structure that is illustrated in Figure 1.

Although a propeller mechanism, such as the part 76, has been described, it will be understood that any suitable sort of a propeller may be employed, the propeller 76 being illustrated as a preferred embodiment, because its efficiency is well known and unquestioned.

In Figure 11 of the drawings, parts used in Figure 1 have been used again, with the suffix "a". The salient features of the form shown in Figure 11 consists, generally stated, in omitting the waterproof socks 15 which are used in Figure 1. In the form shown in Figure 11, the operator simply puts his feet down through the holes 14*a* into the water, and the water is permitted to rise in the cockpit 10*a*. The cockpit 10*a* is kept of comparatively small size by thwartship bulkheads 100, so that the water rising through the openings 14*a* cannot swamp the craft.

In Figures 12 and 13, the hull is marked by the numeral 101 and includes an annular inflatable tube 102, the inflating valve for the tube being marked by the numeral 103. The hull 101 includes a base 104 having openings 105 through which the operator can insert his legs to propel the craft, whilst the operator is seated on the base 104. Any suitable means, such as standards 106, may be provided for joining the base 104 to the tube 102. At their lower ends, the standards 106 may be provided with feet 108 extended under and secured to the base 104, and at their upper ends, the standards 106 may be provided with eyes 107 adapted to receive the inflatable tube 102, the eyes 107 being so constructed that they can be opened to receive the tube 102. Figures 12, 13, and 11, make it evident that the water-proof socks, such as the parts 15, may be omitted wherever desired.

The device forming the subject matter of this application, regardless of its form, enables an operator to propel a small craft about in the water, it being unnecessary for the operator to expose his legs to the chilling effect of the water.

What is claimed is:—

1. A boat including a hull in the form of a draft animal provided with a head having a mouth carrying a bit, a steering mechanism on the hull, and yoke lines accessible to an occupant of the hull, the yoke lines being carried forwardly to the bit, to simulate a bridle, and thence aft to the steering mechanism, the yoke lines being operatively connected to the steering mechanism for the control thereof.

2. A boat including a hull in the form of a draft animal provided with a head having a mouth carrying a bit equipped with rings, yoke lines accessible to an occupant of the hull, the yoke lines being rove slidably through the rings of the bit, to simulate a bridle, and a steering mechanism on the hull, the yoke lines being carried backwardly from the rings to the steering mechanism for the governance of the steering mechanism at the will of the occupant of the hull.

In testimony that I claim the foregoing as my own, I have hereto affixed my signature.

CHRISTOPHER D. O'CONNOR.