F. DIEHL.

CONTROLLER FOR ELECTRIC MOTORS.

APPLICATION FILED MAY 11, 1908.

938,649. Patented Nov. 2, 1909.

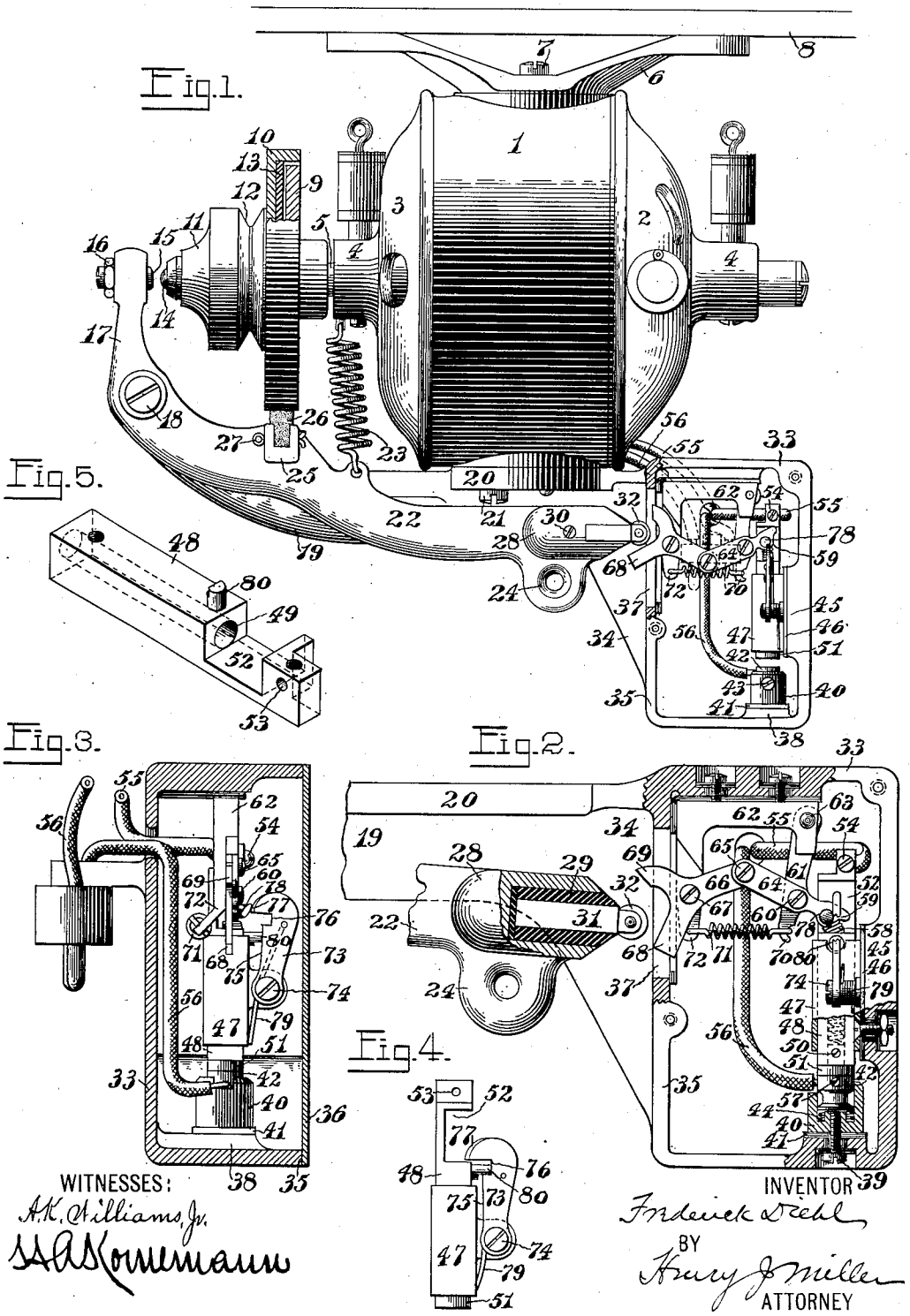

WITNESSES:

A.K. Williams, Jr.

H.A. Kornemann

INVENTOR

Frederick Diehl

BY

Henry J. Miller

ATTORNEY

UNITED STATES PATENT OFFICE.

FREDERICK DIEHL, OF ELIZABETH, NEW JERSEY, ASSIGNOR TO DIEHL MANUFACTURING COMPANY, A CORPORATION OF NEW JERSEY.

CONTROLLER FOR ELECTRIC MOTORS.

938,649. Specification of Letters Patent. Patented Nov. 2, 1909.

Application filed May 11, 1908. Serial No. 432,027.

To all whom it may concern:

Be it known that I, FREDERICK DIEHL, a citizen of the United States, residing at Elizabeth, in the county of Union and State of New Jersey, have invented certain new and useful Improvements in Controllers for Electric Motors, of which the following is a specification, reference being had therein to the accompanying drawings.

This invention relates more particularly to an improvement in that class of electrical driving devices shown and described in the United States Patent to Gustave C. Marx, No. 854,050, of May 21, 1907, and it has for its object to provide a switch adapted to make and break the motor circuit instantaneously regardless of the speed with which the clutch-operating lever moves in establishing and interrupting driving relation between the motor and the machine to be driven.

In the preferred form of the present improvement, the motor-frame is provided with a switch-box or housing containing fixed and movable contact-plugs connected respectively with the two branches of the motor circuit, the movable contact member being controlled by actuating means comprising a vibrating actuating lever having two arms lying alternately in the path of movement of the clutch-operating lever and connected with a spring adapted to accelerate the movement initiated by the clutch-operating lever to one or the other of its extreme positions. The invention includes various constructive details of the switch and its actuating mechanism.

The invention will be understood by reference to the accompanying drawings, in which—

Figure 1 is a side elevation of an electrical driving device embodying the present improvements, with the cover of the switch-box removed to expose the contained parts. Fig. 2 is an enlarged sectional side elevation disclosing the switch and the adjacent end of the clutch-operating lever, and showing the switch members in a different position, and Fig. 3 a transverse sectional elevation of the switch-box at the end nearest the clutch-operating lever. Fig. 4 is a detached elevation showing the relation of the latch-lever with the contact-plug-carrying slide-block when the switch is opened. Fig. 5 is a perspective view of the movable contact member.

The motor-frame is shown composed of a cylindrical body portion 1 and end caps 2 and 3 each provided with a bearing boss 4 in which is journaled the rotary armature-shaft 5, the body portion of the motor-frame being provided with a foot-piece 6 attached thereto by means of screws 7 to enable it to be secured to the bottom of a sewing machine or other work-table or support 8. Upon one end of the armature-shaft 5 is secured the hub of the fixed member 9 of a friction clutch, shown herein as a flat disk, which is embraced by the recessed operative face of the driven clutch-member 10 whose hub 11 is fitted loosely upon the armature-shaft 5 and is provided with a grooved belt-wheel 12 adapted to be belted to a similar wheel upon the main-shaft of the machine to be driven. The driven clutch-member 10 is shown herein provided with the usual facing 13 of leather or other suitable yielding material.

A button 14 is applied to the end of the hub 11 to serve as a wearing piece for engagement with the inner operative end of an adjustable contact-screw 15 applied to a suitably threaded hole and maintained in the proper adjustment by means of a jam-nut 16 in the upper end of the short upright arm 17 of an operating lever fulcrumed upon a stud-screw 18 carried by a bracket-arm 19 extending laterally from a foot-piece 20 connected by screw-bolts 21 with the lower side of the motor-frame portion 1, the longer arm 22 of the operating lever being maintained normally in its raised inoperative position by means of a spring 23 interposed between the same and one of the motor-shaft bearings 4 and adapted to be depressed to shift such lever into operative position by means of a treadle rod connected with the perforated lug 24 of the lever-arm 22. The lever-arm 22 is provided adjacent the rim of the clutch-member 10 with a transverse socket 25 to receive a brake-shoe 26 of yielding material secured therein by means of split pins 27. The rearward end of the lever-arm 22 is provided with a longitudinal socket 28 containing an insulating bushing 29 secured therein by the set-screw 30 and containing the metallic bushing 31 preferably carrying the anti-friction roller 32, which latter is thus insulated from the lever-arm 22 which carries it.

Adjacent and just beyond the path of movement of the roller 32 is disposed the switch-box 33 mounted upon a bracket 34 attached to the motor-frame and provided upon one side with a flat seat 35 to receive the removable cover-plate 36, and having a slot 37 in one wall adjacent and parallel with the path of movement of the roller-stud 32. The bottom of the box 33 is provided with a projecting seat 38 to which is secured by means of the fastening screw 39 the socket 40 with interposed insulating washer 41 and suitable insulation for the fastening screw. To the cylindrical bore of the socket 40 is applied the relatively fixed contact-plug 42 having a grooved shank entered by the point of the laterally extending stop-screw 43 and pressed normally outward by means of a spring 44 interposed between the bottom of the same and the inner end of a countersink in the bottom of the bore of the socket 40.

Secured to a seat 45 upon the side wall of the box 33, with an interposed insulating strip 46 is a tubular guide or socket 47 of angular cross-section to the interior of which is fitted the endwise movable slide-block 48 having the longitudinal hole or socket 49 in the lower end of which is secured by means of the set-screw 50 the movable contact-plug 51 adapted to be shifted into and out of contact relation with the plug 42. The contact-plug-carrying slide-block 48 is provided near its upper end with the lateral notch 52, and its upper extremity is provided with a transverse hole 53 in which is secured by means of the fastening screw 54 one of the terminals 55 of the motor circuit, the other terminal-wire 56 being similarly secured by means of the set-screw 57 in the relatively stationary contact-plug 42.

The reduced shank of the plug 51 forms a bottom for the socket 49, upon which rests one end of a spring 58 whose other end rests against the rounded rearwardly projecting arm 59 of a lever fulcrumed by means of a screw-stud 60 upon a swinging lever 61 pivoted to the fixed insulated bracket-piece 62 by means of the pin 63, and the forwardly extending arm 64 of said lever being linked by means of the screw-pin 65 to the rearwardly extending arm 66 of a rock-lever mounted upon a fixed fulcrum-pin 67 and having its opposite end portion forked to form two arms 68 and 69 whose extremities extend through the slot 37 in the switch-box and lie alternately in the path of movement of the roller 32 carried by the clutch-operating lever 22. The swinging lever 61 has a depending finger 70 attached to one end of a spring 71 whose opposite end is connected with the rigid arm 72 depending from the insulated bracket-piece 62, whereby the movable fulcrum-pin 60 is normally drawn toward the fixed fulcrum-pin 67 so as to bend the toggle formed by the lever-members 64 and 66 into either extreme upper or lower position, and thereby throw the lever-members 68 and 69 of the switch actuating rock-lever alternately into extreme position with one or the other lying within and the other outside of the path of movement of the operating roller-stud 32.

When the toggle is thrown upwardly into operative position by the engagement of the roller 32 with the lower arm 68 of the actuating rock-lever in the downward movement of the clutch-actuating lever 32, as represented in Fig. 2, the lever-arm 59 is in its lowered position and the spring 58 compressed to its fullest extent to throw the contact-plug 51 downward into contact with the yielding plug 42, but when the clutch-operating lever 22 is permitted to rise under the action of its spring 23, the engagement of the roller 32 with the upper arm 69 of the actuating rock-lever shifts the latter and causes the toggle fulcrum-pin 65 to descend across an imaginary line joining the fulcrum-pins 60 and 67, whereby the action of the spring 71 upon the swinging lever 61 causes the fulcrum-pin 60 to approach the fulcrum-pin 67 and bend the toggle into its lowered position represented in Fig. 1, thereby causing the arm 59 of the rearward toggle member to forcibly engage the head of the slide-block 48 and lift the same in opposition to the spring 58 to disengage the movable contact-plug 51 from the relatively stationary plug 42.

In order to insure the instantaneous actuation of the movable contact-member, so as to prevent arcing between the two contact-plugs, I employ a latch-lever 73 fulcrumed upon a fixed stud-screw 74 and provided with a straight cam-edge 75 terminating in a notch 76 and having a rounded nose 77 adapted to engage the beveled end of a cam-pin 78 carried by the lever-arm 59. The latch-lever 73 is normally pressed by means of the spring 79 in contact with the end of a laterally projecting pin 80 upon the slide-block 48.

As indicated in Fig. 1, the cam-pin 78 is, in the initial open position of the switch, withdrawn from contact with the nose of the latch-lever 73, and when the clutch-actuating lever 22 is depressed, the downward movement of the lever-arm 59 first causes the compression of the spring 58 while the end of the pin 80 rests within the notch 76 of the latch-lever, as represented in Fig. 4. It is not until the lever-arm 59 reaches nearly its lower position that the cam-pin 78 engages the nose 77 of the latch-lever 73 to shift the latter backwardly so as to release the pin 80, when the slide-block 48 is permitted to descend under the action of the spring 58 to establish instantaneous contact between the contact-plugs 51 and 42. When

e clutch-operating lever 22 rises to engage e roller 32 with the switch actuating lever-m 69, the straightening of the toggle thus used effects the lifting of the lever-arm 59, e action of the spring 58 between the latter d the slide-block 48 continuing to maintain e latter in its extreme lower position with-t disturbing the contact between the plugs and 42, until the toggle 64 66 has passed mean straightened position, when the nsion of the spring 71, acting upon the inging lever 61, causes the instantaneous nding of the toggle to extreme position d the forcible engagement of the rounded d of the lever 59 with the upper end or ad of the slide-block 48, thus forcibly lift-g the same and instantaneously raising it its retracted circuit-opening position with e contact-plugs 51 and 42 detached to ex-me open position.

It will be observed that in the actuation the switch, the clutch operating lever 22 ts merely to straighten the toggle and ve the same slightly beyond its mean raightened position, at which point the au-matic action of the spring 71 serves to con-nue the movement of the toggle to extreme sition, with the effect above described, the eration of the switch being effected by itial manual action and final automatic tion. The object of cushioning the sta-onary contact-plug 42 by means of the ring 44 is to enable the latter to yieldingly ceive the impact of the spring-actuated ug 51 without causing the rebound of the me upon the closing of the switch with the sultant arcing.

By reference to the drawings, it will be en that the contact-screw 15 carried by the wardly extending shorter arm of the tch-operating lever is spaced appreciably om the button 14 carried by the axially ovable clutch-hub 11, and that the roller carried by the longer laterally extending m 22 of such operating lever, when in itial raised position, extends closely adja-nt to the arm 68 of the actuating lever-ember of the toggle device, whereby the itial movement of the lever-arm 22 serves immediately bend the toggle to and ightly beyond intermediate or neutral po-tion, at which point the action of the ring 71 upon the fulcrum-carrying lever causes the advance of the toggle to ex-eme upper position as represented in Fig. and this is thus accomplished in closing e circuit to start the motor before the horter arm 17 of the clutch-operating lever rces the driven clutch-member 10 into op-rative engagement with the driving clutch-ember 9 to impose a load upon the arma-ure-shaft. The motor is thus enabled to at-in a considerable speed before it is fric-onally connected with the machine to be riven, and is thus caused to operate effi-ciently by reason of the successive closing of the switch and application of the load to the motor.

Having thus set forth the nature of the invention, what I claim herein is:—

1. A driving device comprising an electric motor including a rotary armature-shaft, a driving clutch-member connected to rotate with said armature-shaft, an independently mounted driven clutch-member having means of connection with the machine to be driven, a reciprocatory operating member for effecting the establishment and interruption of driving relation between said clutch-members, an electric switch connected with said motor and provided with an actuating lever extended into the path of movement of the clutch-operating member, and a spring to complete the throw of the switch lever initiated by its engagement with the clutch-operating member.

2. A driving device comprising an electric motor including a rotary armature-shaft, a driving clutch-member connected to rotate with said armature-shaft, an independently mounted driven clutch-member having means of connection with the machine to be driven, a reciprocatory operating member for effecting the establishment and interruption of driving relation between such clutch-members, an electric switch connected with the motor-circuit and provided with a lever normally extended into the path of movement of the clutch-operating member, and means connected with the switch-actuating lever for throwing it beyond the range of movement of the clutch-operating member and closing the circuit.

3. A driving device comprising an electric motor including a rotary armature-shaft, a driving clutch-member connected to rotate with said armature-shaft, an independently mounted driven clutch-member having means of connection with the machine to be driven, a reciprocatory operating member for effecting the establishment and interruption of driving relation between such clutch-members, an electric switch connected with the motor-circuit and provided with relatively fixed and movable contact-plugs, a carrier for the movable contact-plug, an actuating toggle device composed of pivotally connected levers one of which has an arm adapted for operative engagement with said carrier, a swinging lever upon which said toggle-lever is fulcrumed, a second toggle-lever mounted upon a fixed fulcrum and having angularly disposed arms each of which is adapted to project into the path of movement of the clutch-operating member while the other remains out of said path, whereby the movement of the clutch-operating member causes the pivotal connection of the toggle-members to move to and beyond intermediate or neutral position,

and a spring connected with the swinging fulcrum-carrying lever for drawing the movable fulcrum-point of one toggle-lever toward the fixed fulcrum-point of the other toggle-lever to bend the toggle to extreme position independently of the clutch-operating member.

4. A driving device comprising an electric motor including a rotary armature-shaft, driving and driven clutch-members independently mounted upon said armature-shaft, for relative axial movement, the one being connected to rotate with the shaft and the other free to rotate thereon and provided with means of connection with the machine to be driven, an operating lever mounted upon a fixed fulcrum and having a shorter arm normally spaced from but adapted to engage the axially movable clutch-member to force it into driving relation with the other clutch-member, and having a longer arm in angular relation to said shorter arm, an electric switch connected with the motor-circuit and provided with a movable contact-member, and an actuating toggle device operatively connected therewith and comprising a lever normally extended into the path of movement of and closely adjacent to the longer arm of said operating lever, and a spring connected with said toggle device and acting after the initial engagement by the clutch-operating lever of the toggle lever to throw the latter beyond the range of movement of the clutch-operating lever and to shift the movable contact-member to close or open the circuit.

5. An electric switch comprising relatively fixed and movable contact members, and means for shifting the movable member toward and from the fixed member including a pair of pivotally connected toggle-levers one of which is mounted upon a fixed fulcrum, a swinging fulcrum-carrying lever upon which the other of said toggle-levers is fulcrumed intermediate its ends, a spring for forcing said fulcrum-carrying lever toward the fixed fulcrum of the first-mentioned toggle-lever, a connection intermediate the free end of the second-named toggle-lever and the movable contact member, and manually actuated means for bending the toggle-device beyond intermediate or neutral position.

6. An electric switch comprising relatively fixed and movable contact-members, and means for shifting the movable member toward and from the fixed member including a toggle device having a yielding connection with the movable contact-member, manually actuated means for bending the toggle device beyond the intermediate or neutral position, detaining means for locking the movable contact-member from movement in the initial actuation of the toggle, means for releasing said detaining means after the initial actuation of the toggle, and automatically acting means for advancing the toggle to extreme position to effect the throw of the movable contact-member.

7. An electric switch comprising relatively fixed and movable contact-members, and means for shifting the movable member toward and from the fixed member including a toggle device having a yielding connection with the movable contact-member, manually actuated means for bending the toggle device beyond the intermediate or neutral position, detaining means for locking the movable contact-member from movement in the initial actuation of the toggle, means carried by the toggle device for releasing said detaining means after the initial actuation of the toggle, and automatically acting means for advancing the toggle to extreme position to effect the throw of the movable contact-member.

8. An electric switch comprising relatively fixed and movable contact members, a reciprocating carrier for the movable contact member, a detaining device for locking said carrier in circuit-closing or operative position, and actuating means for said carrier including a toggle-device having one of its members in operative relation with said carrier and its detaining device, and means including a spring for throwing the toggle from one to the other extreme position across its straightened or neutral position, whereby said detaining device may be disengaged and the carrier shifted from operative to inoperative position.

9. An electric switch comprising relatively fixed and movable contact members, a self-acting detaining device for locking said movable contact member in circuit-closing or operative position, and actuating means for successively disengaging said detaining device and shifting the movable contact member from operative to inoperative position.

10. An electric switch comprising relatively fixed and movable contact-members, a reciprocating carrier for the movable contact-member, and actuating means for said carrier including a toggle device composed of a pair of toggle-levers one of which has an arm disposed adjacent said carrier and adapted to positively engage the same on one side, a spring interposed between the other side of said toggle lever-arm and the carrier, manually actuated means for bending the toggle device beyond the intermediate or neutral position, and automatically acting means for advancing the toggle to extreme position to effect the throw of the movable contact-member.

11. An electric switch comprising relatively fixed and movable contact-members, a

reciprocating carrier for the movable contact-member, actuating means for said carrier including a toggle device composed of a pair of toggle levers one of which has an arm disposed adjacent said carrier and adapted to positively engage the same on one side, a spring interposed between the other side of said toggle lever-arm and the carrier, a detent mounted upon said carrier, a spring-pressed detaining lever having a shoulder adapted to engage said detent, a cam projection upon said toggle lever-arm adapted to disengage said detaining lever from said detent, manually actuated means for bending the toggle device beyond the intermediate or neutral position, and automatically acting means for advancing the toggle to extreme position to effect the throw of the movable contact-member.

12. An electric switch comprising relatively fixed and movable contact-members, a reciprocating carrier for the movable contact-member, actuating means for said carrier including a toggle device composed of a pair of toggle-levers one of which has an arm disposed adjacent said carrier and adapted to operatively engage the same, a swinging lever upon which said toggle-lever is fulcrumed to move transversely of the direction of reciprocation of said carrier, manually actuated means for bending the toggle device beyond the intermediate or neutral position, and a spring applied to the fulcrum-carrying lever for advancing the toggle to extreme position to effect the throw of the movable contact-member.

13. An electric switch comprising relatively fixed and movable contact-members, a reciprocating carrier for the movable contact-member, actuating means for said carrier including a toggle device composed of a pair of toggle-levers one of which has an arm disposed adjacent said carrier and adapted to positively engage the same on one side, a swinging lever upon which said toggle-lever is fulcrumed to move transversely of the direction of reciprocation of said carrier, a spring interposed between the other side of said toggle-lever arm and the carrier, a detent mounted upon said carrier, a spring-pressed detaining lever having a shoulder adapted to engage said detent, a cam projection upon said toggle-lever arm adapted to disengage said detaining lever from said detent, manually actuated means for bending the toggle device beyond the intermediate or neutral position, and a spring applied to the fulcrum-carrying lever for advancing the toggle to extreme position to effect the throw of the movable contact-member.

In testimony whereof, I have signed my name to this specification, in the presence of two subscribing witnesses.

FREDERICK DIEHL.

Witnesses:

H. A. KORNEMANN,

JOSEPH F. JAQUITH.