3 Sheets—Sheet 1.

A. Q. REYNOLDS.

AUTOMATIC FRUIT DRIERS.

No. 190,368. Patented May 1, 1877.

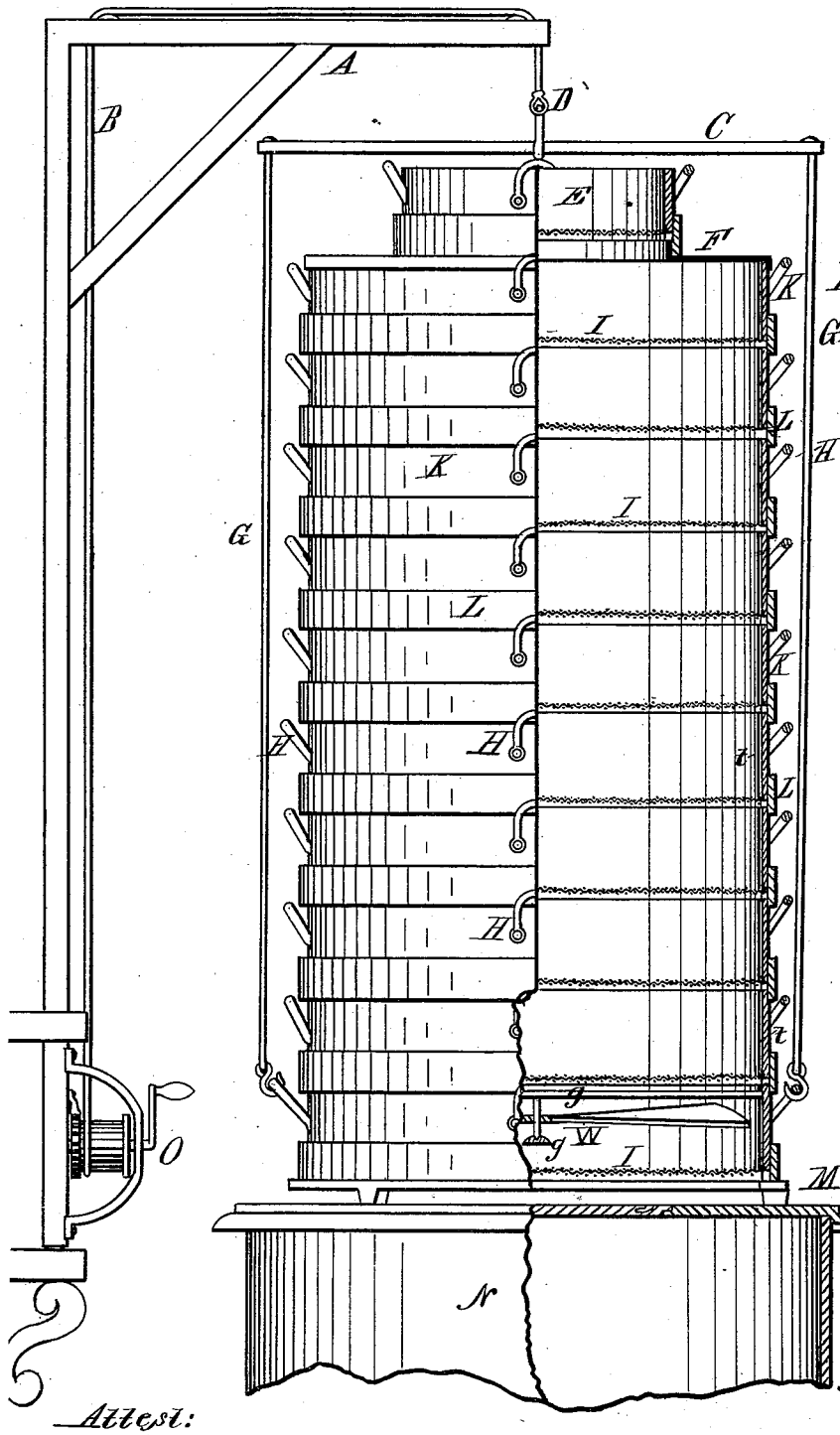

Fig. 1.

Attest:
C. R. Searle.
A. P. Lowe

Asa Q. Reynolds,
Inventor.
By North Osgood,
Attorney.

N. PETERS, PHOTO-LITHOGRAPHER, WASHINGTON, D. C.

3 Sheets—Sheet 2.

A. Q. REYNOLDS.

AUTOMATIC FRUIT DRIERS.

No. 190,368. Patented May 1, 1877.

Fig. 2.

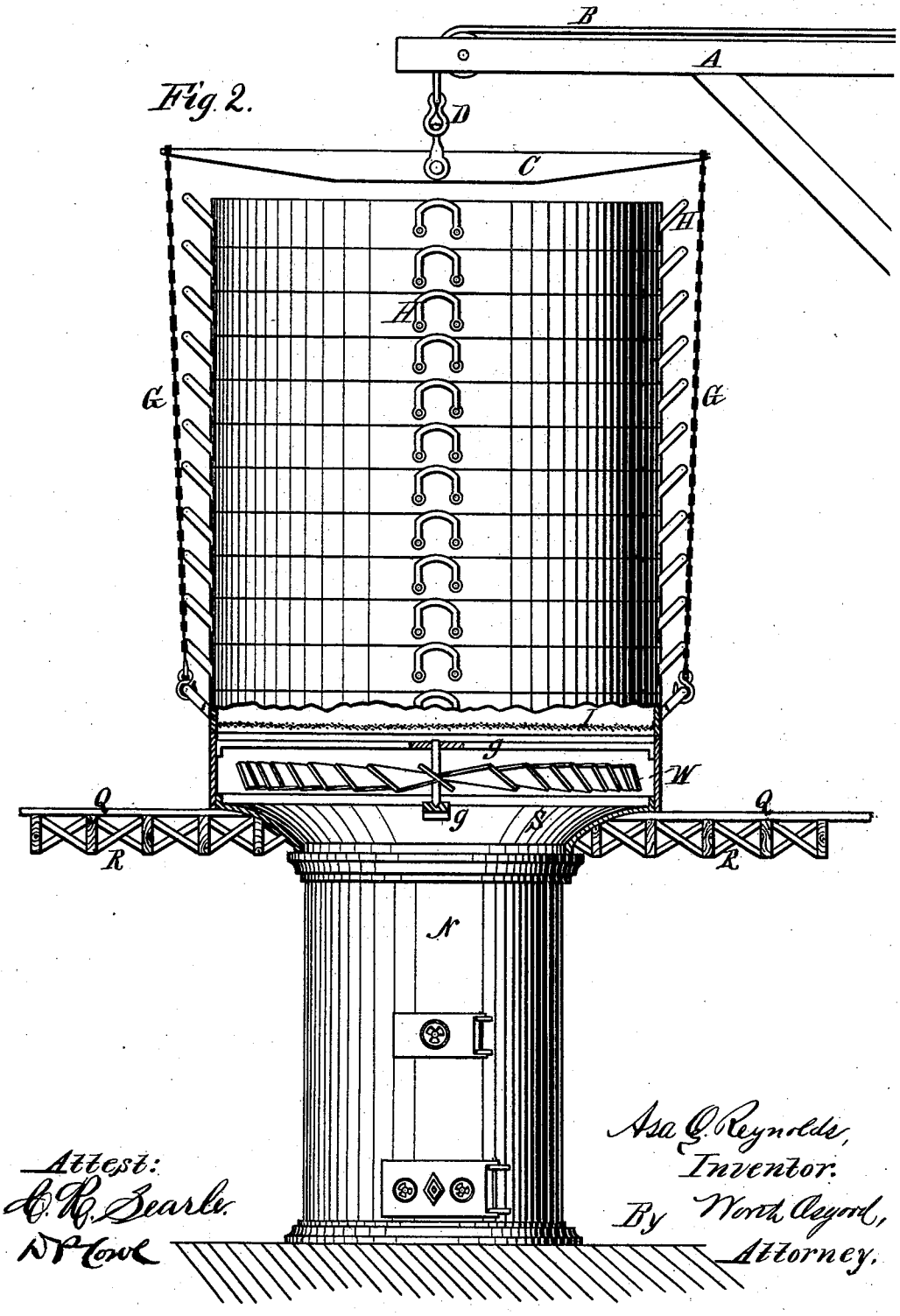

Attest:
C. R. Searle.
D. P. Cowl

Asa Q. Reynolds,
Inventor.
By Worth Osgood,
Attorney.

N. PETERS. PHOTO-LITHOGRAPHER, WASHINGTON, D. C.

3 Sheets—Sheet 3.

A. Q. REYNOLDS.

AUTOMATIC FRUIT DRIERS.

No. 190,368. Patented May 1, 1877.

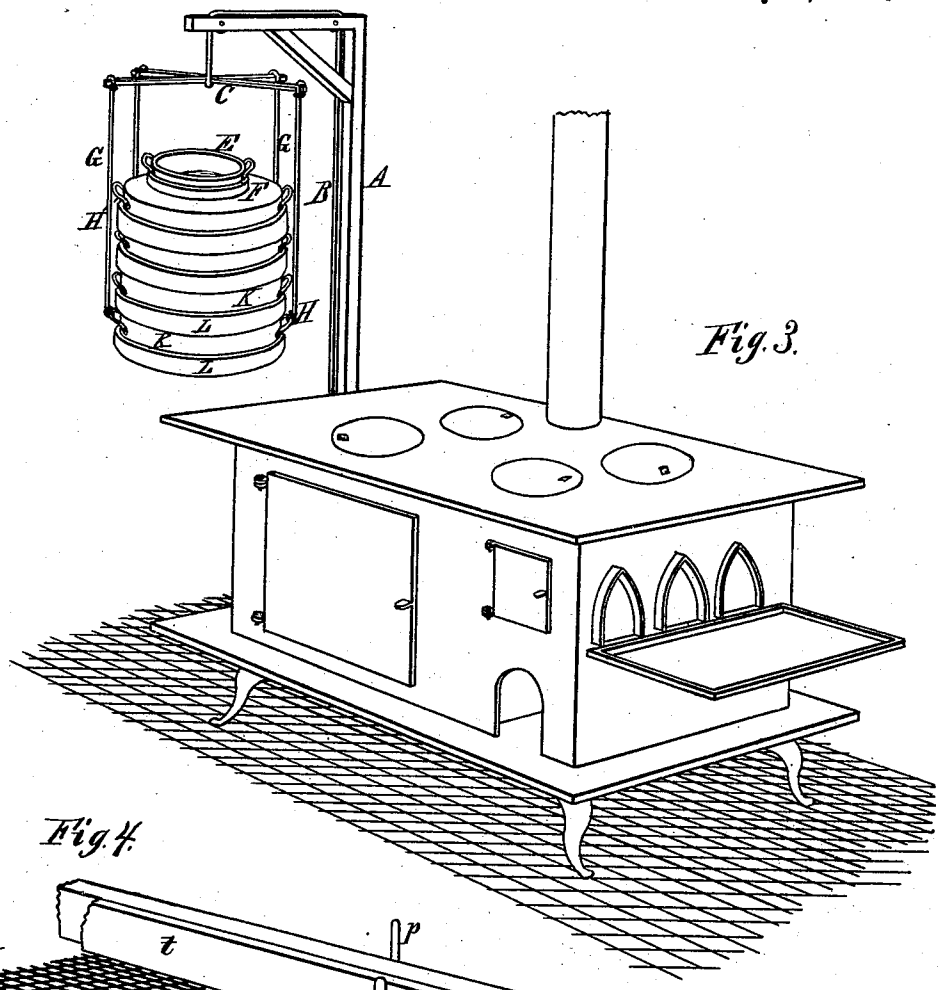

Fig. 3.

Fig. 4.

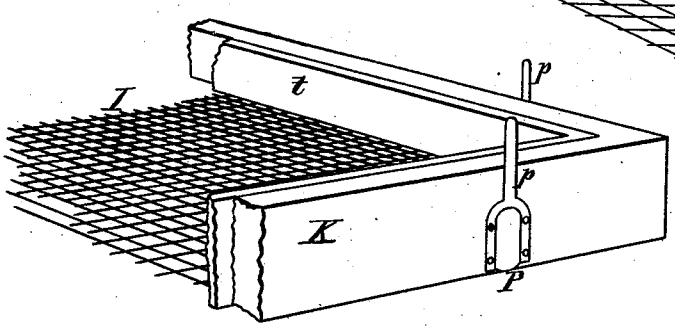

Fig. 5.

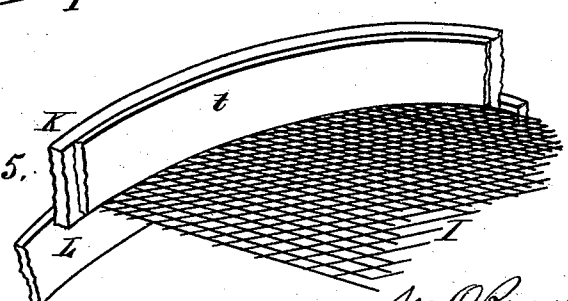

Attest:
C. R. Searle.
D. P. Cowe

Asa Q. Reynolds,
Inventor.
By North Osgood,
Attorney.

N. PETERS, PHOTO-LITHOGRAPHER, WASHINGTON, D. C.

UNITED STATES PATENT OFFICE.

ASA QUINCY REYNOLDS, OF CHICAGO, ILLINOIS.

IMPROVEMENT IN AUTOMATIC FRUIT-DRIERS.

Specification forming part of Letters Patent No. **190,368**, dated May 1, 1877; application filed April 2, 1877.

To all whom it may concern:

Be it known that I, ASA QUINCY REYNOLDS, of Chicago, county of Cook, and State of Illinois, have invented certain new and useful Improvements in Automatic Fruit-Driers, of which the following is a full, clear, and exact description, reference being had to the accompanying drawings, and to the letters of reference marked thereon.

Figure 1 is a partial section and elevation of my improved fruit-drier, showing the same as being located over an ordinary stove, and illustrating a simple means of elevating the machine. Fig. 2 is a similar view, showing the drier as located over a large furnace, as in the most extensive dry-houses. Fig. 3 is a perspective view, illustrating the improved drier in a position removed from over an ordinary cooking-stove. Fig. 4 is a perspective view of a fragment of a square tray or section, showing more plainly the metallic lining, and the sockets and pins, which may be conveniently used in this form of tray. Fig. 5 is a similar view of a fragment of a round tray or section, showing also the tin or metallic lining.

Like letters of reference in all the figures indicate corresponding parts.

The object of my invention is to simplify the construction of the fruit-driers in common use, both for domestic and factory purposes, reducing the cost, increasing the efficiency, and rendering them easier to be manipulated, and at the same time fire-proof, and capable of being enlarged or contracted at the pleasure of the operator; to accomplish all of which it (the invention) consists in certain details of construction and combinations of parts, as will be hereinafter fully described, and then pointed out in the claims.

In Fig. 1 N is an ordinary stove or heating-drum, over which is located the drier, consisting of a number of trays so constructed as that any one will receive a similar one above, and also fit over a similar one below. For the lighter forms of driers I propose to make these trays of the ordinary sieves, or build them in the same manner, with perhaps two or more braces beneath the foraminated bottom, to give it sufficient strength to support the weight of fruit. K is the main body of the tray, having a surrounding hoop, L. The several trays being of one size (save the uppermost, to be hereinafter described,) it will be observed that each one will form a section of the wall of the drier, no matter what its position, and that this wall may be increased in height as much as desired or found necessary.

A is a crane, and B a rope or chain running over it, and controlled by the windlass O. From the cross-bars C the ropes or chains G depend, and these are made to suspend the drier through the medium of the handles H H, &c., upon each tray. In order to prevent the drier from tipping when elevated, three or more handles should be employed in connection with a corresponding number of chains or ropes, G.

At M is shown an iron ring, supported slightly above the top of the stove N, and upon which the lower tray rests. The drier is built up as follows:

Fruit having been suitably disposed in a tray, the hooks upon the lower ends of the ropes G are placed under two or more of the handles H H, on the lowermost tray of the drier already over the stove, and the whole is elevated, by means of the windlass, O, a trifle more than the depth of one tray. The fresh tray is then placed upon the ring M, and those above lowered upon it, being so guided by the hands that the hoop of the one to which the ropes are attached will fit over the top of the one placed thereunder. In this way the drier may be built as high as desired by the successive introduction of trays below. The swinging crane and windlass combined is regarded as the simplest means likely to be employed for elevating the drier.

As the drying progresses and the trays are elevated, the fruit therein becomes more and more compact or shriveled up, leaving a comparatively free passage for the heated air through the body of the drier, in consequence of which very much of said air would pass off without accomplishing the work intended, and the partially-cured fruit occupying considerably less space than the fresh, it is desirable that one or more smaller-sized trays be provided for its reception.

Upon the top of the uppermost of the main

series of trays I place a flange, F, having a circular opening, with upwardly-projecting collar, over which flange is located the tray E′, made in all respects similar to those below save as to its size. This flange serves to contract the flue formed by the series of trays below, and if the partially-dried fruit be placed in the tray E it will partially retard the flow of the air, and thus utilize so much thereof as would otherwise be wasted in the completion of the drying process. Above the flange F any number of small trays, E, may be placed, being matched one upon the other in a manner similar to those below.

Within each tray I propose to place a metallic lining, *t t*, (preferably of bright tin,) the object of which is to protect the wood of the trays from heat, and prevent moisture from penetrating the same.

In Fig. 2 the series of trays forming the dry-house is shown as located over a large furnace placed below the flooring Q. This form is intended for the larger sizes of dry-houses, and is not different in principle or construction from that already described, except in that no hoops are illustrated as being placed upon the trays. These may be connected or matched with each other by any desirable and appropriate means.

It may be found advantageous to construct the trays in other forms than circular, as indicated in Fig. 4, wherein the pin *p* and socket P are secured at suitable points upon the outside, and arranged to engage with similar sockets and pins upon the trays above and below, after the manner adopted in "molders' flasks," and the like.

With the swinging crane the drier may be removed from over the stove, as shown at Fig. 3, when the ordinary cooking operations may be performed, and the drier returned at pleasure; or, if desirable, the driers may be elevated above the stove, leaving sufficient space between the two for the cooking utensils, and thus the drying and cooking processes be conducted simultaneously.

At D, Figs. 1 and 2, is a swivel-connection, by means of which the series of trays may be revolved, and thus the drying equalized throughout.

As fast as the fruit is thoroughly cured the trays are removed from the top, and may then be inserted at bottom, after having been charged with a fresh supply.

In all fruit-driers it is observed that the material is liable to contract or shrivel in such manner as to open passages for the heated air, in consequence of which the fruit in the trays is unequally dried, the air passing off through these passages without coming in contact with the surrounding fruit. This difficulty has given rise to numerous inventions calculated to obviate it, among the most noticeable of which are revolving trays and revolving covers or shields for said trays. These are found in practice expensive to build, difficult to handle and move, and liable to get out of order; and it is a very important feature of the present invention to do away with all these objections.

This I accomplish by the introduction of a fan-wheel calculated to retard the ascending currents of heated air, and to distribute them uniformly across the whole area of the fruit-containing tray.

In Fig. 1 the wheel W, composed of a series of inclined blades, is pivoted between the two bars *g g*, which are attached to the metallic lining *t*, before alluded to. It is sufficiently elevated above the foraminated bottom I as not to interfere with the placing of fruit upon said bottom, if desired. The inclined blades cause the wheel to be rapidly revolved by the ascending currents of air, and these, meeting with a resistance, are compelled to pass by the blades in a uniform manner, said blades being so cut or separated as that they shall permit the passage of an equal quantity of air at every point below the bottom of the tray placed next above. Any number of these fans may be placed in the series of trays, as is apparent from the construction above described. They are automatically operated, not liable to get out of repair, and they are found to be very efficient for the purposes intended. If the currents of air be very rapid and strong, the revolutions of the wheels are correspondingly rapid, and thus, under all circumstances, the said currents are automatically regulated and always evenly distributed.

For the larger-sized driers the wheel W may advantageously be placed immediately over the funnel-mouth S, conducting the heated air from the furnace below, as in Fig. 2. It may be pivoted in any desirable way, and other fans may be distributed throughout the series of trays.

When the trays are made in square form, one fan occupying as much space therein as possible will be found to work satisfactorily. If the trays be made oblong, then two fans might be introduced, the better to occupy the necessary space. They should, of course, be made to work upon about the same level. These wheels have now come to be denominated "flutter-wheels," and I desire to be understood as not limiting my invention to any particular number to be employed, to any specified location of said wheels in the drier, or to any particular method of suspending the same, so long as they are made to revolve independently of the trays, and to accomplish the results intended.

Having thus fully described my invention, what I claim as new, and desire to secure by Letters Patent, is—

1. In combination with a series of fruit-drying trays, located one above the other, a second or supplementary series smaller than the first, and adapted to operate as and for the purposes explained.

2. The plate F, adapted to cover the flue formed by the lower series of trays, and to

receive and hold the upper series, the whole being arranged and combined substantially as set forth.

3. In combination with a fruit-drying tray, a fan-wheel operated by the ascending currents of heated air, movable independently of said tray, and adapted to equalize the currents of air, in the manner set forth.

4. In combination with a fruit-drier, the outer wall of which is made up of the frames of the several trays, as explained, a suspending device, operating substantially as described, and supporting said drier from a point in or on the lowermost tray thereof, for the objects named.

5. In combination with a fruit-drier adapted to be elevated, in the manner described, and suspended above a stove or furnace, a suspending device, substantially as shown, provided with a swivel-connection, as and for the purposes set forth.

In testimony that I claim the foregoing I have hereunto set my hand in the presence of two witnesses.

ASA QUINCY REYNOLDS.
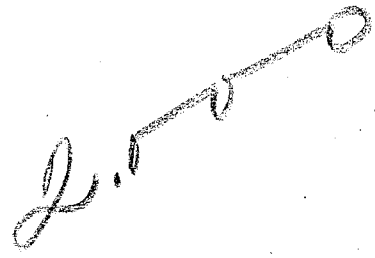
Witnesses:
PHILIP A. EARL,
CHAS. R. SEARLE.