PCT WORLD INTELLECTUAL PROPERTY ORGANIZATION
International Bureau

INTERNATIONAL APPLICATION PUBLISHED UNDER THE PATENT COOPERATION TREATY (PCT)

(51) International Patent Classification 6 : F23D 17/00, F23C 7/00, F23R 3/12 | A1

(11) International Publication Number: WO 95/23316

(43) International Publication Date: 31 August 1995 (31.08.95)

(21) International Application Number: PCT/US95/02209

(22) International Filing Date: 23 February 1995 (23.02.95)

(30) Priority Data:
201,310 24 February 1994 (24.02.94) US

(71) Applicant: UNITED TECHNOLOGIES CORPORATION [US/US]; United Technologies Building, Hartford, CT 06101 (US).

(72) Inventors: SNYDER, Timothy, S.; 129 Springside Trail, Glastonbury, CT 06033 (US). ROSFJORD, Thomas, J.; 175 Orchard Hill Drive, South Windsor, CT 06074 (US). MCVEY, John, B.; 223 Cider Mill Road, Glastonbury, CT 06033 (US). HU, Aaron, S.; 39 Allendale Road, Hartford, CT 06106 (US). SCHLEIN, Barry, C.; 263 Hartford Avenue, Wethersfield, CT 06109 (US).

(74) Agent: CHIANTERA, Dominic, J.; United Technologies Corporation, Patent Dept., United Technologies Building, Hartford, CT 06101 (US).

(81) Designated States: CA, JP, KR, European patent (AT, BE, CH, DE, DK, ES, FR, GB, GR, IE, IT, LU, MC, NL, PT, SE).

Published
With international search report.
Before the expiration of the time limit for amending the claims and to be republished in the event of the receipt of amendments.

(54) Title: TANGENTIAL ENTRY FUEL NOZZLE

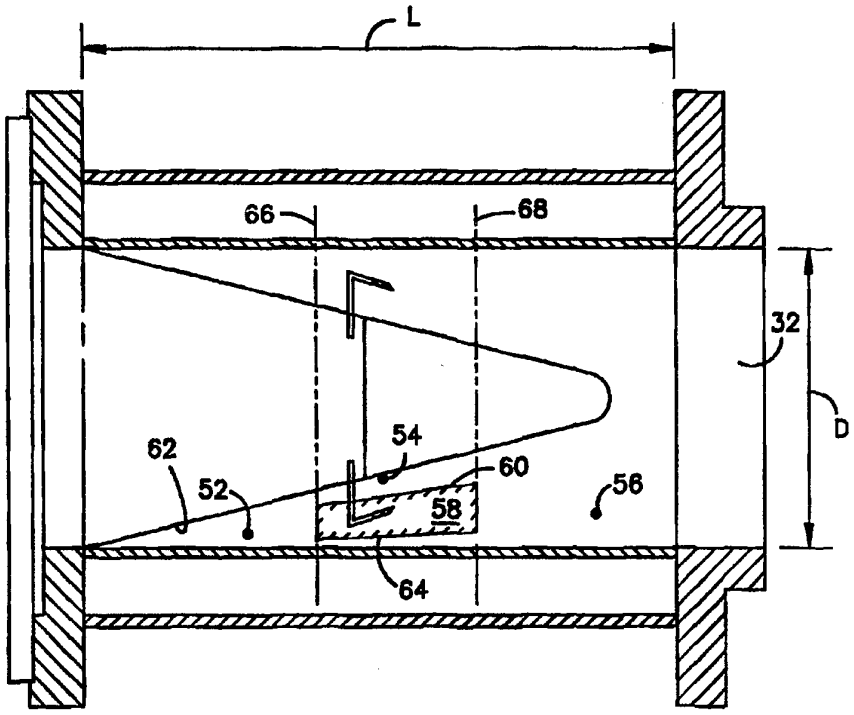

(57) Abstract

A premix liquid fuel nozzle has longitudinal air entrance slots (24) into a cylindrical chamber (20). A centerbody (42) produces an axially increasing flow area toward the chamber outlet (32). Liquid fuel is atomized in a specified location (58) adjacent the conical centerbody (42). This area has a high axial shear velocity producing thorough vaporization and uniform mixing before combustion.

FOR THE PURPOSES OF INFORMATION ONLY

Codes used to identify States party to the PCT on the front pages of pamphlets publishing international applications under the PCT.

AT	Austria	**GB**	United Kingdom	**MR**	Mauritania
AU	Australia	**GE**	Georgia	**MW**	Malawi
BB	Barbados	**GN**	Guinea	**NE**	Niger
BE	Belgium	**GR**	Greece	**NL**	Netherlands
BF	Burkina Faso	**HU**	Hungary	**NO**	Norway
BG	Bulgaria	**IE**	Ireland	**NZ**	New Zealand
BJ	Benin	**IT**	Italy	**PL**	Poland
BR	Brazil	**JP**	Japan	**PT**	Portugal
BY	Belarus	**KE**	Kenya	**RO**	Romania
CA	Canada	**KG**	Kyrgystan	**RU**	Russian Federation
CF	Central African Republic	**KP**	Democratic People's Republic of Korea	**SD**	Sudan
CG	Congo			**SE**	Sweden
CH	Switzerland	**KR**	Republic of Korea	**SI**	Slovenia
CI	Côte d'Ivoire	**KZ**	Kazakhstan	**SK**	Slovakia
CM	Cameroon	**LI**	Liechtenstein	**SN**	Senegal
CN	China	**LK**	Sri Lanka	**TD**	Chad
CS	Czechoslovakia	**LU**	Luxembourg	**TG**	Togo
CZ	Czech Republic	**LV**	Latvia	**TJ**	Tajikistan
DE	Germany	**MC**	Monaco	**TT**	Trinidad and Tobago
DK	Denmark	**MD**	Republic of Moldova	**UA**	Ukraine
ES	Spain	**MG**	Madagascar	**US**	United States of America
FI	Finland	**ML**	Mali	**UZ**	Uzbekistan
FR	France	**MN**	Mongolia	**VN**	Viet Nam
GA	Gabon				

DESCRIPTION
TANGENTIAL ENTRY FUEL NOZZLE

Technical Field

The invention relates to low NOx combustion and in particular to the combustion of liquid fuel.

Background of the Invention

Combustion at high temperature leads to the formation of NOx, or oxides of nitrogen, because of the combination of oxygen with nitrogen at high temperature. This is a notorious pollutant and much effort is being put forth to reduce the formation of NOx.

Current gas turbine engines used combustion systems in which the fuel is directly injected into the front end of the combustor. The result on the fuel-air mixture must assure stable efficient combustion. Where no attempt is made to premix these flows, wide variations in the mixture fuel-air ratio exists. Local regions having near stoichiometric fixtures create high temperature combustion products which generate the high NOx levels. In an effort to decrease the combustor emissions of NOx, advanced designs have focused on premixing the fuel and air prior to their introduction into the combustor. In this way, both the occurrence of high temperature combustor regions, and the peak temperature within them are minimized. As a consequence, NOx formation is minimized.

Such a strategy is more easily executed for gas fuel devices because of change of phase of the fuel is not required, and the overall fuel-air mixing process can be accelerated. With the use of liquid fuel, a high fuel-air ratio inherently exists at the liquid droplet an interface. The strategy must

therefore achieve adequate levels of fuel atomization and vaporization simultaneous with fuel distribution and mixing processes. The strategy which relies on fuel-air premixing to suppress peak temperatures is a "dry" NOx control, which is contrast to "wet" NOx control which injects steam or water into the nozzle to suppress flange temperature.

It is desirable that combustion be maintained outside the fuel injector with no flashback or recirculation into the nozzle. The liquid fuel should be vaporized before discharging into the combustor at high power. Where the liquid fuel nozzle is combined with a gas nozzle, the good gas performance of the gas combustion should not be decreased. It is desirable that a uniform mix before ignition be achieved because too rich an area leads to high NOx generation.

Summary of the Invention

A substantially cylindrical burner chamber is formed of several partial cylinders, each having the axis of the respective cylinder offset from the axis of the others. A slot is formed between the walls of adjacent partial cylinders with this slot having a length and width and the slot wall being tangential to the chamber wall. Combustion supporting air is supplied through this slot.

For a dual fuel nozzle, the gas distribution manifold is located adjacent to the slot with the plurality of axially spaced openings for delivering gas to the airflow as it passes into the slot.

A conical body is located in the chamber on the axis of the chamber with the base of the conical body at the upstream end of the chamber and the apex toward the outlet end of the chamber. There is a plenum therefore established between the conical body and the cylindrical chamber.

An injection zone is defined as a annular volume within this plenum concentric with the conical body, bounded by imaginary cones at 30% and 80% of the distance from a conical body surface to the diameter "D", this diameter being a diameter of the outlet of the chamber. It is also defined by planes axially located from the axial center of the inlet slot a distance plus

and minus 10% of the inlet slot axial length. There are means for injecting liquid fuel for atomizing within the injection zone.

The liquid fuel may be atomized within the injection zone by locating the splash plate within the zone and directing a flow of liquid fuel against the splash plate. It may be atomized within the injection zone by extending fuel tubes into the zone with a spray nozzle at the end of each tube. The fuel should be atomized to a (sauter) mean diameter of less than 80 microns and preferably about 40 microns particle size.

Brief Description of the Drawings

Figure 1 is a schematic of a gas turbine engine and combustor;

Figure 2 is a sectional axial view of a fuel injector;

Figure 3 is a sectional view of the fuel injector taken along section 3-3 of Figure 2;

Figure 4 is a sectional view showing the fuel injection zone; and

Figure 5 is a view of an alternate embodiment to that of Figure 2.

Description of the Preferred Embodiment

The Figure 1 schematic illustrates a gas turbine engine with the compressor supplying compressed air to combustor 12. Gas through gas supply line 14 or oil through oil supply line 16 is supplied to the combustor for combustion. The gaseous combustion products pass through turbine 18.

Referring to Figures 2 and 3, a substantially cylindrical combustor chamber 20 is formed by two partial cylinders 22 having their axis offset from one another. Inlet airflow slots 24 are thereby formed having a height "H" and a width "W". These slots are located with the wall 26 of each slot being tangential to the inner wall 28 of the substantially cylindrical chamber. These partial cylinders are secured to a base plate 30 having an opening 32 of diameter "D" for the exit of the air fuel mixture. This diameter is established by a tangent to the inner portion 34 of the partial cylinders and this diameter is relevant to the ratios discussed here below even though the

fuel nozzle may be extended with the reduced diameter at the discharge end.

Combustion supporting airflow 36 passes through the slots establishing the whirling action in chamber 20 if gas is supplied as an alternate fuel the gas enters through line 14 to manifold 38 passing through fuel orifice 40. A gas injection nozzle of this sort is described in co-pending application Serial No. 841,942, filed February 26, 1992.

A conical centerbody 42 is axially centered in the chamber with its base 44 located at an upstream end and its apex 46 located at the downstream end. While shown and described here as a precise truncated cone, it may have surfaces which are not linear but are parabolic. It has significance in that it modifies the flow area of the incoming air passing through chamber 20 so that the flow area constrains the flow in a manner to produce an average axial velocity which is maintained at a rather uniform level.

A splash plate or splash plates 48 are supported within the chamber 20 by any convenient means with the support having minimum obstruction to the airflow. Liquid fuel through lines 16 is injected through openings 50 and directed against the splash plates 48. Liquid fuel is injected onto the splash plate in a manner which promotes fuel filming over the surface. The swirling airflow shear atomizes the liquid fuel which subsequently vaporizes and mixes with the air.

Tests have been conducted to determine the flow pattern occurring within the combustor chamber and around the conical member. It has been found that fuel introduced at an upstream location 52 or at location 54 near the surface each tends to remain confined to the flow region adjacent to the conical body. This results in a concentration fuel at the center of the exit plane. On the other hand, fuel introduced at a downstream location 56 tends to concentrate around the periphery of the exit plane. Any local concentration of fuel leads to high NOx formation. The desired location of fuel injection would be one which promotes a uniform mixing of the air and fuel at the exit plane where combustion takes place.

These tests have permitted us to define an injection zone 58 at which location the fuel should be atomized. The zone is radially bounded by a first conical imaginary surface 60 located 30% of the distance from the surface 62 of the cone to the surface established by diameter "D". A second imaginary conical surface 64 sets the outside boundary of the radial dimension, this being 80% of the distance between the surface 62 and the diameter "D".

The axial limits of this zone are established by a first plane 66, the location of this plane being related to the length "L" to the inlet slot by being 10% of the length upstream of the midpoint. A downstream plane 68 sets the other boundary, this being 20% downstream of the midpoint of the inlet opening.

It has been found that an intense axial shear occurs within this injection zone which promotes mixing and vaporization of the liquid fuel, and which uniformly distributes the fuel in the vaporized form over the exit plane of outlet 32.

The defined injection zone is appropriate for atomization techniques which provide a mean droplet diameter of less than about 80 microns. The vaporization and inertial characteristics of droplets of larger diameter result in fuel being centrifuged to the outer wall 28 thereby resulting in undesirable rich fuel concentration regions.

In Figure 2, a splash plate was shown as a means for atomizing fuel within the injection zone. Figure 5 shows an alternate where fuel tubes 80 carrying fuel spray nozzles 82 are located within the injection zone.

The central airflow chamber 84, with or without swirling van 86, may be used in the center of the cone to modulate any recirculation occurring in this swirling flow leaving the fuel nozzle.

We claim:

Claims

1. A low NOx burner for a gas turbine engine, comprising:

a substantially cylindrical burner chamber having an axis, having an axially extending chamber wall, and having an upstream end and an outlet end;

said outlet end having a diameter "D";

at least one longitudinally extending slot in the wall of said cylindrical chamber, said slot having an axial length and a slot wall tangential to said chamber wall;

supply means for supplying air through said slot;

a gas distribution manifold located adjacent said slot and having a plurality of axially spaced openings for delivering gas into the airflow as it passes into said slot;

a conical body located in said chamber on the axis of said chamber with the base of said conical body at the upstream end of said chamber and the apex of said conical body toward the outlet end of said chamber;

an injection zone defined as an annular volume concentric with said conical body bounded by imaginary surfaces at 30% and 80% of the distance from said conical body surface to the diameter "D", and by planes axially located from the axial center of said inlet slot a distance 10% toward said base and 20% toward said outlet end of said inlet slot axial length; and

liquid fuel injection means for atomizing fuel within said injection zone.

2. A low NOx burner for a gas turbine engine as in claim 1 wherein:

said liquid fuel injection means comprises a splash plate located with at least a portion of said plate within said injection zone; and means for directing a flow of liquid fuel against said splash plate.

3. a low NOx burner for a gas turbine engine as a claim 1 wherein:

said liquid fuel injection means comprises a plurality of imperforate fuel tubes terminating in said injection zone; and a spray nozzle at the end of each fuel tube.

4. A low NOx burner for a gas turbine engine as in claim 1 comprising also:

said substantially cylindrical chamber formed of a plurality of partial cylinders having the axis of each cylinder offset from the axis of the other, whereby a plurality of slots are formed between the walls of adjoining partial cylinders.

5. a low NOx burner for a gas turbine engine as in claim 2 comprising also:

the number of partial cylinders and the number of slots being two.

6. A low NOx burner for a gas turbine engine, comprising:

a substantially cylindrical burner chamber having an axis, having an axially extending chamber wall, and having an upstream end and an outlet end;

said outlet end having a diameter "D";

at least one longitudinally extending slot in the wall of said cylindrical chamber, said slot having an axial length and a slot wall tangential to said chamber wall;

supply means for supplying air through said slot;

a gas distribution manifold for delivering gas into the airflow passing through said slot;

a centerbody located in said chamber on the axis of said chamber in a manner to increase the annular flow area around said centerbody toward said outlet end of said chamber;

an injection zone defined as an annular volume concentric with said centerbody bounded by imaginary surfaces at 30% and 80% of the distance

from said centerbody surface to the diameter "D", and by planes axially located from the axial center of said inlet slot a distance 10% toward said base and 20% toward said outlet end of said inlet slot axial length; and

liquid fuel injection means for atomizing fuel within said injection zone.

7. A low NOx burner for a gas turbine engine as in claim 6 comprising also:

said substantially cylindrical chamber formed of two partial cylinders, having the axis of each cylinder offset from the axis of the other, whereby two slots are formed between the walls of adjoining partial cylinders.

8. A low NOx burner for a gas turbine engine, comprising:

a substantially cylindrical burner chamber having an axis, having an axially extending chamber wall, and having an upstream end and an outlet end;

said outlet end having a diameter "D";

at least one longitudinally extending slot in the wall of said cylindrical chamber, said slot having an axial length and a slot wall tangential to said chamber wall;

supply means for supplying air through said slot;

a centerbody tapered from a base to an apex, and located in said chamber on the axis of said chamber with the base of said centerbody at the upstream end of said chamber and the apex of said centerbody toward the outlet end of said chamber;

an injection zone defined as an annular volume concentric with said centerbody bounded by imaginary surfaces at 30% and 80% of the distance from said centerbody surface to the diameter "D", and by planes axially located from the axial center of said inlet slot a distance 10% toward said base and 20% toward said outlet end of said inlet slot axial length; and

liquid fuel injection means for atomizing fuel within said injection zone.

9. A low NOx burner for a gas turbine engine, comprising:

a substantially cylindrical burner chamber having an axis, having an axially extending chamber wall, and having an upstream end and an outlet end;

said outlet end having a diameter "D";

at least one longitudinally extending slot in the wall of said cylindrical chamber, said slot having an axial length and slot wall tangential to said chamber wall;

supply means for supplying air through said slot;

a centerbody located in said chamber on the axis of said chamber having a large diameter base of said centerbody at the upstream end of said chamber and having an apex of said centerbody toward the outlet end of said chamber;

an injection zone defined as an annular volume concentric with said centerbody bounded by imaginary surfaces at 30% and 80% of the distance from said centerbody surface to the diameter "D", and near the axial center of said inlet slot;

liquid fuel injection means for atomizing fuel within said injection zone.

10. A low NOx burner for a gas turbine engine as in claim 9 comprising also:

said substantially cylindrical chamber formed of two partial cylinders having the axis of each cylinder offset from the axis of the other, whereby two slots are formed between the walls of adjoining partial cylinders.

11. A method of burning liquid fuel in the combustor of a gas turbine engine with a premixing type of combustion, comprising:

tangentially introducing combustion air through a slot of length "L" into a substantially cylindrical chamber having a centerbody and increasing

axial flow area toward an outlet end of said substantially cylindrical chamber having a diameter "D";

distributively atomizing liquid fuel into said combustion air in an injection zone in said substantially cylindrical chamber, said injection zone located from 10% of the length "L" upstream of the center of said slot to 20% of the length "L" downstream, and between 30% and 80% of the distance from said centerbody to said diameter "D"; and

burning said main gas flow at the outlet of said substantially cylindrical chamber.

fig.1

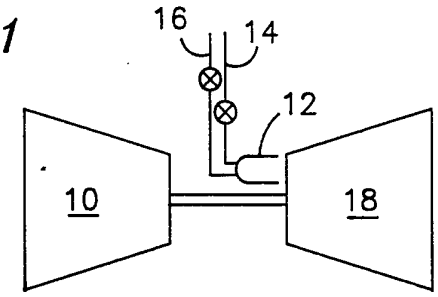

fig.2

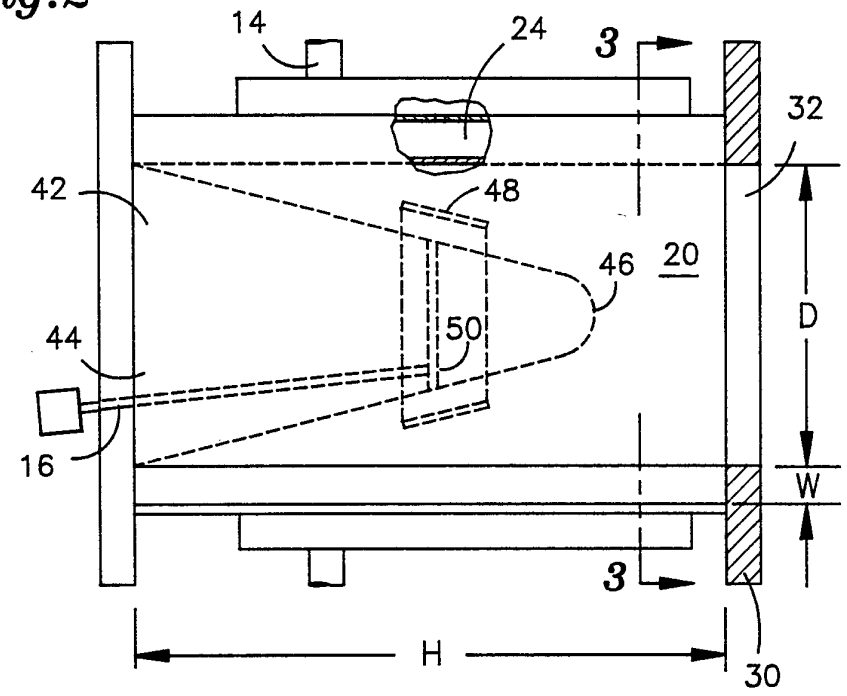

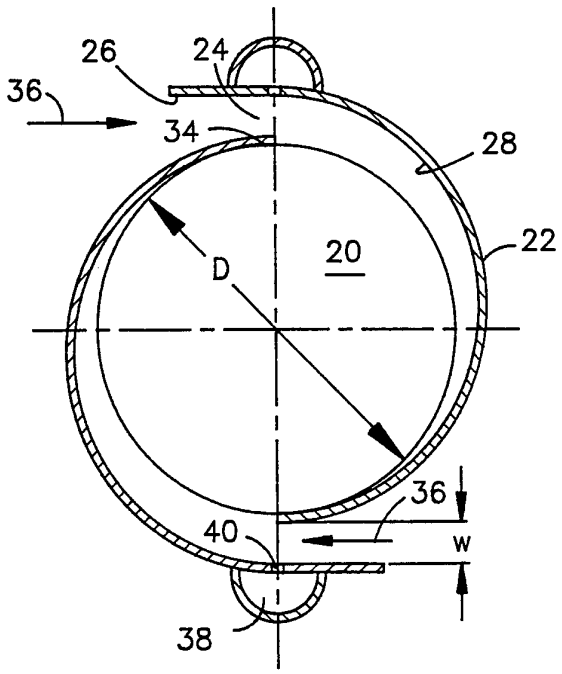

fig.3

fig.4

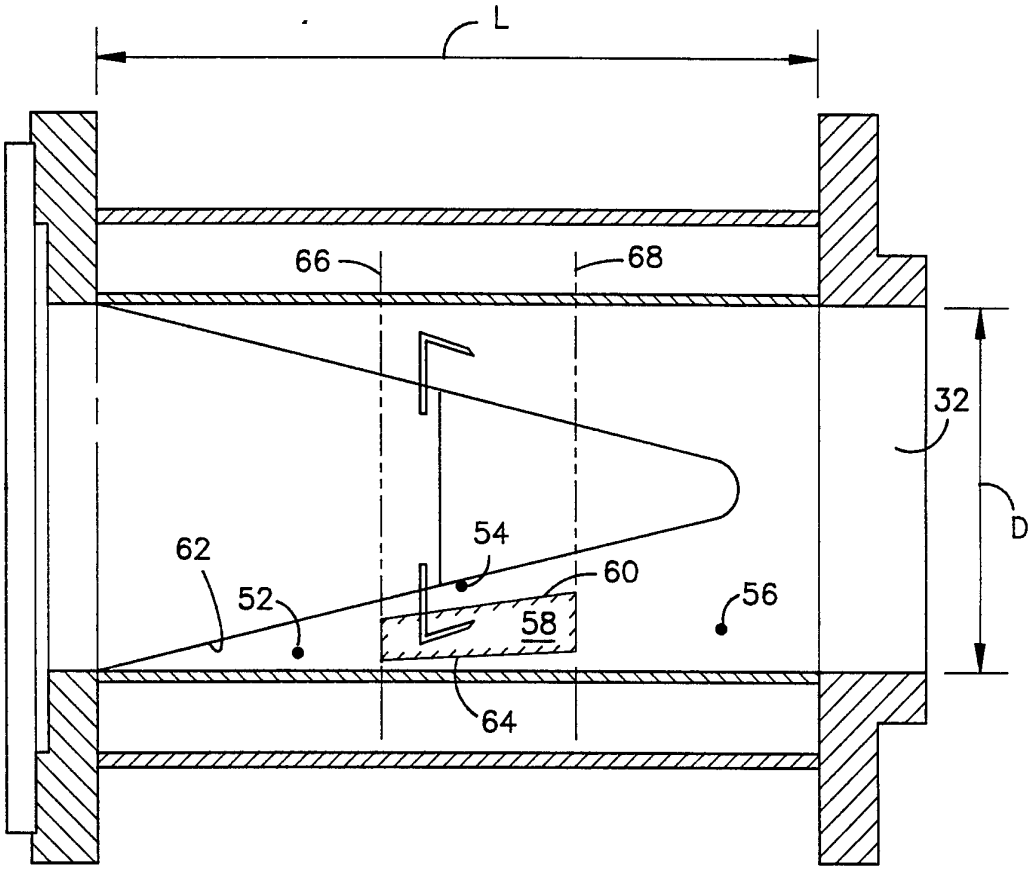

fig.5

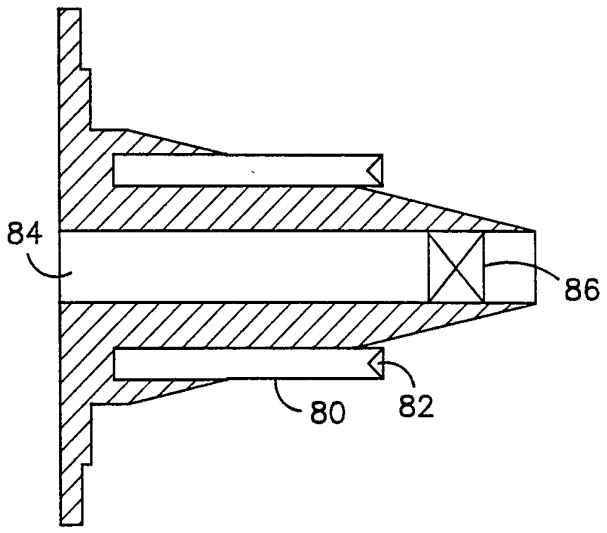

INTERNATIONAL SEARCH REPORT

Inte onal Application No
PCT/US 95/02209

A. CLASSIFICATION OF SUBJECT MATTER
IPC 6 F23D17/00 F23C7/00 F23R3/12

According to International Patent Classification (IPC) or to both national classification and IPC

B. FIELDS SEARCHED

Minimum documentation searched (classification system followed by classification symbols)
IPC 6 F23D F23C F23R

Documentation searched other than minimum documentation to the extent that such documents are included in the fields searched

Electronic data base consulted during the international search (name of data base and, where practical, search terms used)

C. DOCUMENTS CONSIDERED TO BE RELEVANT

Category °	Citation of document, with indication, where appropriate, of the relevant passages	Relevant to claim No.
A	WO-A-93 17279 (UNITED TECHNOLOGIES CORP) 2 September 1993 cited in the application see the whole document ---	1,4-11
A	US-A-4 398 388 (LANGSTON JR CHANDOS E) 16 August 1983 see column 3, line 22 - line 27; figure 2 ---	2
A	EP-A-0 210 462 (BBC BROWN BOVERI & CIE) 4 February 1987 see figure 5 ---	
A	EP-A-0 503 319 (ASEA BROWN BOVERI) 16 September 1992 see the whole document -----	

☐ Further documents are listed in the continuation of box C.

☒ Patent family members are listed in annex.

° Special categories of cited documents :

"A" document defining the general state of the art which is not considered to be of particular relevance

"E" earlier document but published on or after the international filing date

"L" document which may throw doubts on priority claim(s) or which is cited to establish the publication date of another citation or other special reason (as specified)

"O" document referring to an oral disclosure, use, exhibition or other means

"P" document published prior to the international filing date but later than the priority date claimed

"T" later document published after the international filing date or priority date and not in conflict with the application but cited to understand the principle or theory underlying the invention

"X" document of particular relevance; the claimed invention cannot be considered novel or cannot be considered to involve an inventive step when the document is taken alone

"Y" document of particular relevance; the claimed invention cannot be considered to involve an inventive step when the document is combined with one or more other such documents, such combination being obvious to a person skilled in the art.

"&" document member of the same patent family

Date of the actual completion of the international search	Date of mailing of the international search report
15 June 1995	21. 06. 95

Name and mailing address of the ISA	Authorized officer
European Patent Office, P.B. 5818 Patentlaan 2 NL - 2280 HV Rijswijk Tel. (+31-70) 340-2040, Tx. 31 651 epo nl, Fax: (+31-70) 340-3016	Coli, E

Form PCT/ISA/210 (second sheet) (July 1992)

INTERNATIONAL SEARCH REPORT

Information on patent family members

Intc onal Application No
PCT/US 95/02209

Patent document cited in search report	Publication date	Patent family member(s)		Publication date
WO-A-9317279	02-09-93	US-A-	5307634	03-05-94
		EP-A-	0627062	07-12-94
		JP-T-	7504265	11-05-95
		US-A-	5402633	04-04-95
US-A-4398388	16-08-83	NONE		
EP-A-0210462	04-02-87	JP-B-	6103085	14-12-94
		JP-A-	63038812	19-02-88
		US-A-	4781030	01-11-88
EP-A-0503319	16-09-92	CH-A-	682952	15-12-93
		DE-A-	4113681	17-09-92
		JP-A-	4320711	11-11-92
		US-A-	5244380	14-09-93