Dec. 22, 1964 H. ZÖLLER 3,162,093

HYDRAULIC SERVO-MECHANISM

Filed June 9, 1961

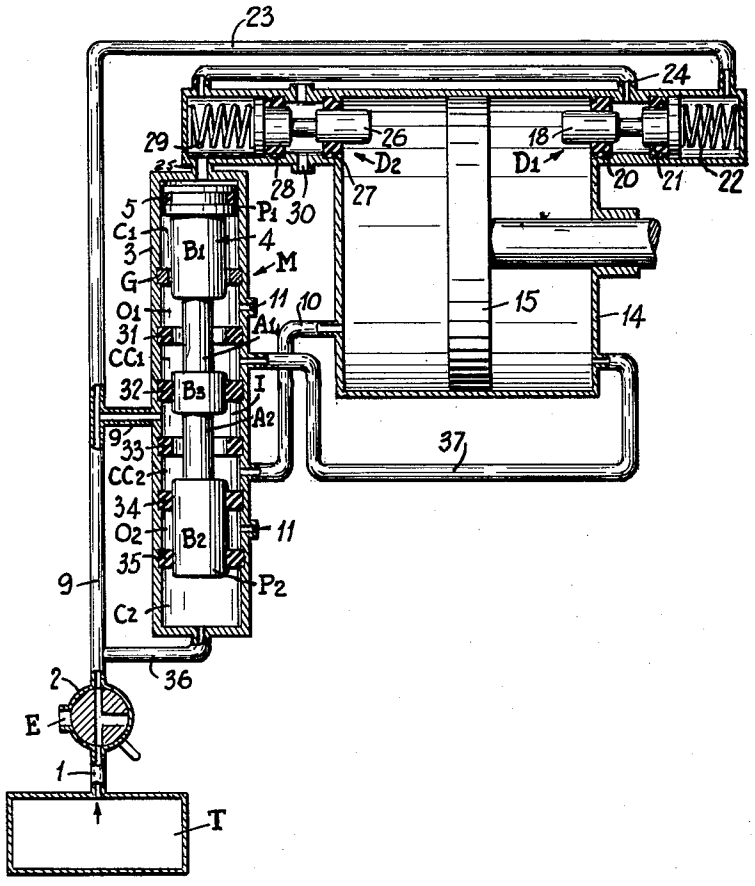

United States Patent Office

3,162,093

Patented Dec. 22, 1964

1

3,162,693

HYDRAULIC SERVO-MECHANISM

Hans Zöller, deceased, late of Laubenheim, near Mainz, Germany, by Elisabeth Katharina Zöller, née Kehl, and Helga Schulz-Zöller, née Zöller, heirs, both of 59–60 Wormserstrasse, Laubenheim, near Mainz, Germany

Filed June 9, 1961, Ser. No. 116,662

2 Claims. (Cl. 91—306)

This invention relates to fluid driven engines and methods of operating them in which a piston is driven alternately from two sides by a fluid under pressure. More particularly the invention concerns a special main control valve in a feed system for such an engine.

An object of the present invention is to provide a system for driving a double action engine which is operated by a pressure medium. Such a pressure medium may be a fluid under pressure, such as a liquid or a compressed gas (which may be air or steam, for example), which constitutes the working fluid or propellant for the working piston.

According to the present invention a system is provided which comprises (1) a source of pressure medium, working fluid or propellant; (2) a pressure engine provided with a working piston operating within a cylinder; (3) a plurality of pressure medium conduits, pipes, tubes or ducts which provide connections between the pressure medium source and the cylinder; (4) a plurality of valves inserted in selected conduits and in particular at least one main control valve operated by differential pressure; (5) and finally means for switching the entire system on and off which may be a manually operated switch valve.

The main control valve system comprises a number of pressure medium or fluid chambers or compartments which convey the working fluid successively alternately to the first and thereafter the second side of the piston of the control valve. This valve is controlled by two secondary operating valves allocated respectively to the first side and the second side of the working piston.

Another object of the invention is to provide, in a system of the kind described, a single main control valve which is actuated by the system itself and is therefore automatic in response to differential feed back pressure. The valve system of the main valve contains several pressure medium chambers. One chamber is a propellant inlet chamber which is always in communication either with a first or with a second connecting chamber. The two connecting chambers communicate respectively with the cylinder on either side of the piston.

Further objects, features and advantages of the invention appear in the following detailed description of a preferred embodiment of the invention taken together with the drawing. The drawing and detailed example are provided by way of illustration and not of limitation.

Construction

In the drawing, a pressure medium source T, such as a compressed air tank, is connected to the system by a pipe 1. The pipe 1 contains a manually operated shut-off valve or switch 2 which may be constructed as a three-way valve. It may be arranged so that it shuts off the pipe 1 from the rest of the system or so that it connects the entire system to an exhaust aperture E.

2

A principal component of the system is a main control valve M. A main valve control piston or slider 4 is mounted in a housing 3 of the main valve M so that it can move longitudinally. As seen at the top of the drawing, the main valve piston 4 has on its upper extremity a first piston head P_1 provided with a packing ring 5, which move together in a first cylinder chamber C_1. At its other end the valve piston 4 extends to form a second head P_2 which projects into a second cylinder chamber C_2 of the housing. The cross sectional area of the second head P_2 is smaller than that of the piston head P_1.

Within the housing 3 of the main valve M are five fluid chambers I, CC_1, CC_2, O_1 and O_2. These are arranged in line adjacent one another and are sealed by packing rings 31, 32, 33, 34 and 35 respectively. The packing rings are mounted in circumferential grooves in and arranged in a fixed position with respect to the inner surface of the wall of the housing 3; their inner annular surfaces engage closely and seal with the enlarged parts of the main valve piston 4.

The chambers are arranged as follows:

A fluid inlet chamber I is arranged as a central or intermediate chamber and is connected, via the main fluid conduit 9, the manually operated on-off valve 2, and the feed pipe 1, with the source T of pressurized fluid. The connecting chambers CC_1 and CC_2 are situated on each side of the inlet chamber I and are separated from the inlet chamber I solely by the respective packing ring 32 or 33.

The first connecting chamber CC_1, is joined by the pipe 37 with the engine working cylinder 14 on one side of the working piston 15; while the second connecting chamber CC_2 is joined by the pipe 10 with the cylinder 14 on the other side of the piston 15.

Adjacent to the first connecting chamber CC_1, and separated from it by the packing ring 31 is the first fluid outlet chamber O_1. A vent 11 of this chamber is always connected with the external atmosphere, or in the case of a hydraulic system with a collection sump for the liquid. Similarly, the second fluid outlet chamber O_2 is provided adjacent the second connecting chamber CC_2 and is separated from it by a packing ring 34.

Adjacent the first outlet chamber O_1 is the first valve operating cylinder C_1 of the main control valve M. The chamber O_1 and cylinder C_1 are separated by a guide ring G. The ring G provides a path for the fluid between the cylinder C_1 and the chamber O_1. The outer surface of the guide ring G is inserted in a circumferential groove provided in the inner surface of the wall of the housing 3 and so is secured to the cylinder wall.

The second outlet chamber O_2 is isolated from the adjacent second cylinder C_2 by a packing ring 35. When the manual valve 2 is switched on, the second cylinder C_2 is always connected with the fluid source T by the duct 36 which is a branch of the main conduit 9.

The control piston or slider 4 of the main valve M has two recessed zones A_1 and A_2 of reduced cross section between two enlarged longer zones B_1 and B_2 and a shorter enlarged central zone B_3.

The first outer enlarged zone B_1 acts with the sealing ring 31 and in the operating position of the valve piston 4 (not shown in the drawing) engages the ring 31 with a sealing effect.

The second outer zone B_2 of enlarged cross section acts with the rings 34 and 35 and constantly engages the ring

35. In the position of the valve slider 4 (which is not shown in the drawing) this zone, B_2, disengages the ring 34.

The central enlarged zone B_3 cooperates with the rings 32 and 33. In the operating position of the control valve slider 4 (not shown in the drawing) this zone B_3 releases the ring 32 and engages the ring 33.

Auxiliary operating valves D_1 and D_2 are provided for control of the main valve M. The first operating valve D_1 is situated on one side of the working piston 15 and its control pin 18 projects into the inner chamber of the cylinder 14. The control pin 18 is held and moves in the packing 20. The packing ring 21, together with the rear part of the control pin 18, separates the internal chamber of the valve D, into two compartments of which the rear or right one is connected with the main conduit 9 by the pipe 23. The control pin 18 is held in the position in which the two compartments are separated by a spring 22. The pin 18 is provided with a portion of reduced thickness in order to allow the two compartments to be joined when the pin 18 is pressed in to the right.

The operating valve D_2, allocated to the left or second side of the working piston 15, is constructed in what is basically the same manner as the valve D_1. It is provided with a control pin 26, a main packing 27, a packing ring 28, which subdivides the valve into two compartments, and a spring 29. The rear compartment of the second operating valve D_2 is connected by a conduit 24 to the front chamber of the first operating valve D_1, and by a pipe 25 to the first cylinder C_1 of the main control valve M. The front compartment of the second operating valve D_2 connects by vents 30 with the atmosphere or with a sump.

The circumferential portions of packing rings 20, 21, 27 and 28 are inserted into grooves at the inner surface of the valve housing wall. They are thus fixed with respect to the valve housing. The valve pins 18 and 26 are guided for axial sliding by packing rings 20, 21 and 27, 28 respectively.

A pump, valve, or switch to be driven may be attached to the working piston 15.

Operation

When the on-off valve 2 is open fluid flows through the conduits 1, 9, 23 and 36. When the main valve slider or piston 4 is in its top position, as seen in the drawing, the fluid flowing through the conduit 9 flows past the packing 33 along the recess A_2 of the valve piston 4, through the conduit 10 into the working cylinder 14 and moves the piston 15 to the right.

The piston 15 forces the pin 18 to the right against the spring 22 and against the pressure of the fluid coming from the conduit 23. Fluid then flows past the packing 21 in the valve D_1 and via the conduits 24 and 25 to the piston head P_1 of the main valve slider or piston 4 in the cylinder C_1. This forces the latter down, so that the packings 31 and 33 seal chambers CC_1 and I.

The packings 32 and 34 are disengaged so that fluid flowing out of conduit 9, goes past the packing 32 along the constriction A_1 and via the conduit 37, to the cylinder 14, forcing the piston 15 to the left. In this process, the exhaust fluid, from the piston 15, flows out via the conduit 10 into chamber CC_2, past the packing 34 along the constriction A_2 and out at 11.

When the piston 15 engages the pin 26, the pin 26 moves to the left against the spring 29 so that fluid in the cylinder C_1 flows past the packing 28 and exhausts at 30. The fluid from conduit 36 acts from below through chamber C_2 on the surface of the valve piston 4, forcing it up together with its seating 5 so that packings 32 and 34 are engaged as in the drawing, while packings 31 and 33 release the valve at the recesses. Again fluid flows along conduit 37 to the left past the packing 31 and out at the upper vent 11, as fluid from conduit 9 flows past the packing 33 and via conduit 10 enters the working cylinder 14 and forces the piston 15 to the right as seen in the drawing.

The operating cycle described repeats regularly and as long as the switch valve 2 is open: The piston 15 moves in the cylinder 14 alternately left and right until reversal occurs in each case via the secondary valve pins 18 and 26 and the main valve piston 4.

What is claimed is:

1. A main control slide valve which is operated by differential pressure for operating a pressure-medium engine, of which the working piston is fed and driven by a pressure-medium from two sides in alternation during the working strokes, comprising at least three stationary valve chambers formed by an annular space between the outer surface of the full diameter zones of a slide valve having two zones of constricted diameter and the inner surface of a cylindrical valve housing, said stationary valve chambers being arranged side by side along the longitudinal axis of said cylindrical valve housing and being separated from each other by packing rings secured to the inner surface of the valve housing and alternately engaged and released by said full diameter zones of the slide valve so that chambers which are in communication in a first slide position are separated in the second position and vice versa; and differential pressure means to move said slide valve between said two positions comprising a first piston head of enlarged cross section on a first end of said control slide valve, which piston head works in a first operating chamber of said valve housing and a second piston head of smaller cross section on a second end of said control slide, which second piston head works in a second operating-chamber of said valve housing and means independent from said pressure inlet of the valve which connect said second operating-cylinder directly with pressure-medium piping at all times and which connect said first operating-cylinder selectively with said pressure medium inlet valve and with said second operating-cylinder via valves, and connect selectively with said pressure-medium piping and with a pressure-medium vent.

2. In a system for driving an engine in which a working piston is supplied with a pressurized fluid alternately from each side, and which comprises: a source of fluid under pressure; an engine including a piston moving in a working cylinder; a plurality of fluid conduits, including a main conduit connecting said source and said working cylinder; and a plurality of valves arranged in working relation with at least one of said conduits; the improvement comprising a main fluid valve having a valve piston sliding in a cylinder between two end positions to connect alternately each side of said working piston with said main conduit; said slide valve piston having two zones of constricted diameter and three zones of full diameter, said valve piston forming an annular space with the inner surface of the valve housing along its entire length, said annular space being divided into five stationary chambers within said housing separated from each other by packing rings which are secured to the inner surface of the valve housing and alternately engaged and released by said full diameter zones of the valve pistons; said five stationary pressure-medium chambers comprising a pressure-medium inlet-chamber, a first pressure-medium connecting-chamber which is situated on one side of and is connected with a working cylinder on a first side of a working piston, a second pressure-medium connecting-chamber which is situated on a second side of and opposite said first pressure-medium connecting-chamber and is connected with said working cylinder on a second side of said working piston, a first pressure-medium outlet-chamber which is situated opposite said pressure-medium inlet-chamber and adjacent to said first pressure-medium connecting-chamber and is provided with a pressure-medium vent, a second pressure-medium outlet-chamber which is situated opposite said pressure-medium inlet-chamber and adjacent to said second pressure-medium

connecting-chamber and is provided with a pressure-medium vent, said slide-valve piston in a first position connecting said first pressure-medium connecting-chamber with said first pressure-medium-outlet-chamber and said second pressure-medium connecting chamber with said pressure-medium inlet-chamber, while in a second position said piston connecting said first pressure-medium connecting-chamber with said pressure-medium inlet-chamber and said second pressure-medium connecting chamber with said second pressure-medium outlet-chamber, said main valve including differential pressure operating means, comprising two pressure chambers cooperating in counteracting relation with two operating surfaces of different size on said valve piston, said pressure chambers being connected to said main conduit independently

of a pressure medium inlet of said main valve; and means controlling said operating means independently of said pressure medium inlet of said main valve.

References Cited in the file of this patent

UNITED STATES PATENTS

471,882	Nanny	Mar. 29, 1892
818,284	Pelham	Apr. 17, 1906
986,592	Rankin	Mar. 14, 1911
2,712,302	Zoller	July 5, 1955
2,745,429	Crookston	May 15, 1956

FOREIGN PATENTS

1,054,297	Germany	Apr. 2, 1959