(No Model.) 3 Sheets—Sheet 1.

# F. F. RAYMOND, 2d.

## HEEL NAILING MACHINE.

No. 316,828. Patented Apr. 28, 1885.

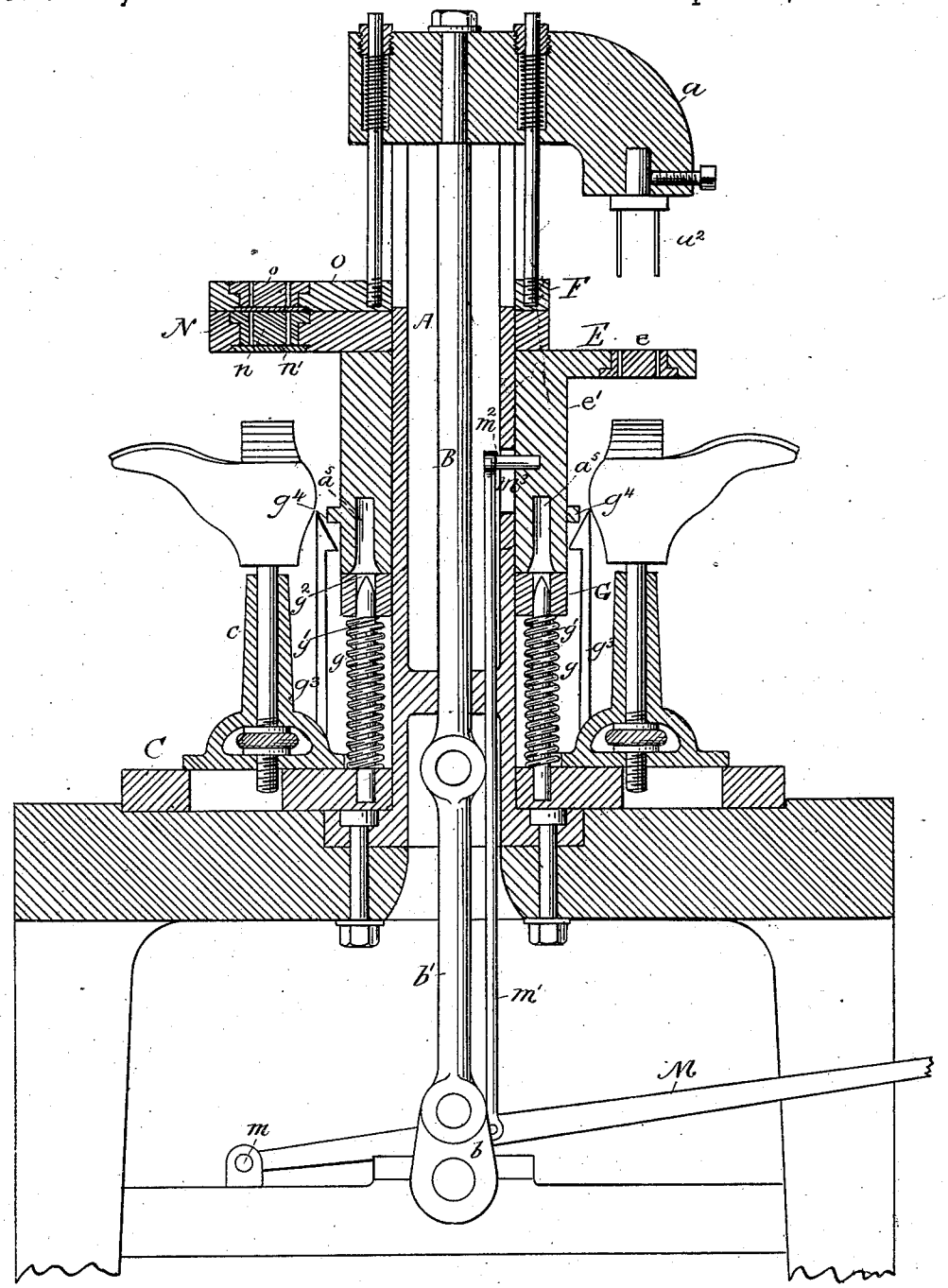


Fig. 1.

WITNESSES

J. M. Dolan

Fran. B. Dolan

INVENTOR

F. F. Raymond, 2d

N. PETERS. Photo-Lithographer, Washington, D. C.

(No Model.) 3 Sheets—Sheet 2.

# F. F. RAYMOND, 2d.

## HEEL NAILING MACHINE.

No. 316,828. Patented Apr. 28, 1885.

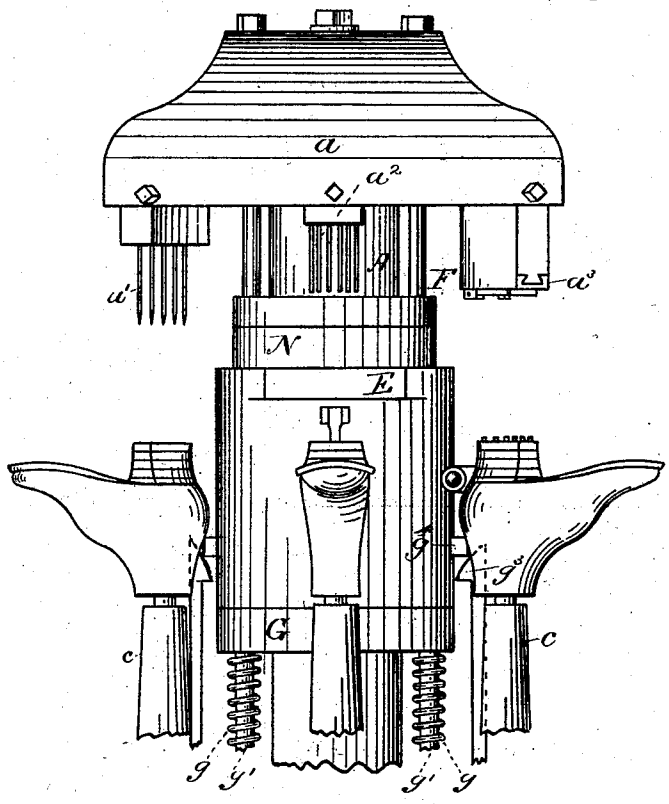


Fig. 2.

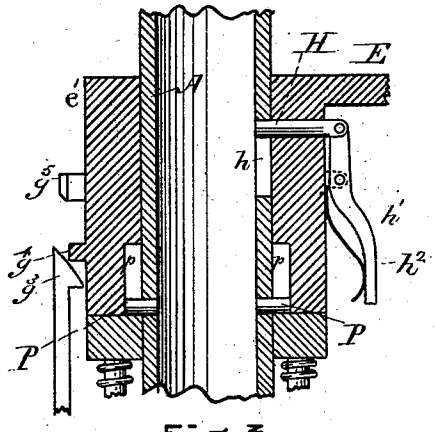


Fig. 3.

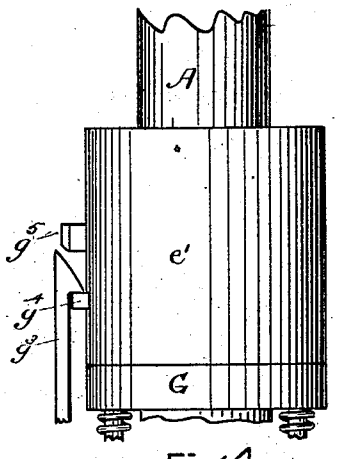


Fig. 4.

WITNESSES

J. M. Dolan.

Fred. B. Dolan.

INVENTOR

F. F. Raymond

N. PETERS. Photo-Lithographer. Washington. D. C.

(No Model.) 3 Sheets—Sheet 3.

# F. F. RAYMOND, 2d.

## HEEL NAILING MACHINE.

No. 316,828. Patented Apr. 28, 1885.

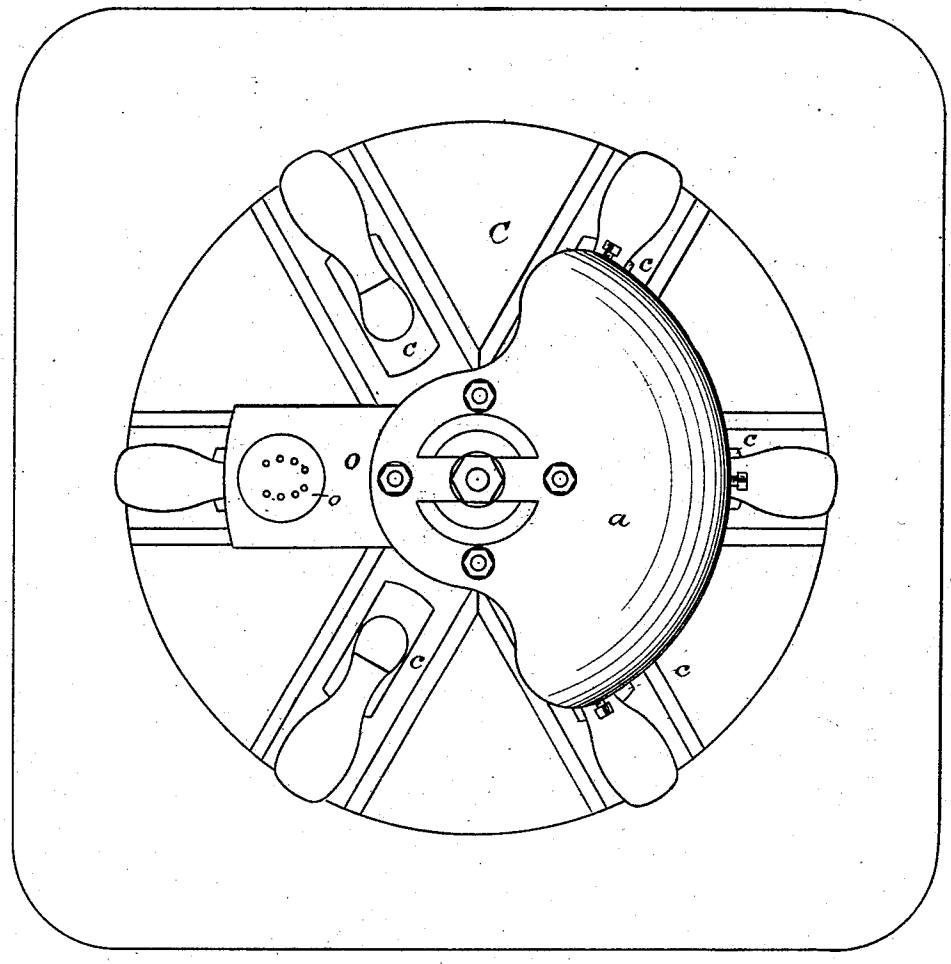


Fig. 5.

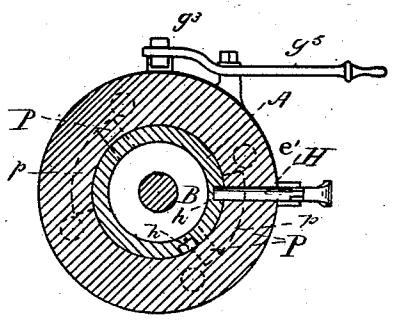


Fig. 6.

WITNESSES

J. M. Dolan.

Fred. P. Dolan.

INVENTOR

F. F. Raymond 2d

N. PETERS. Photo-Lithographer. Washington, D. C.

# UNITED STATES PATENT OFFICE.

FREEBORN F. RAYMOND, 2D, OF NEWTON, MASSACHUSETTS.

## HEEL-NAILING MACHINE.

SPECIFICATION forming part of Letters Patent No. 316,828, dated April 28, 1885.

Application filed January 24, 1885. (No model.)

*To all whom it may concern:*

Be it known that I, FREEBORN F. RAYMOND, 2d, of Newton, in the county of Middlesex and State of Massachusetts, a citizen of the United States, have invented a new and useful Improvement in Heel-Nailing Machines, of which the following is a full, clear, and exact description, reference being had to the accompanying drawings, forming a part of this specification, in explaining its nature.

The invention relates to a heel nailing or attaching machine, and comprises various features of construction whereby the boots or shoes are fed continuously to the heel-attaching devices, and the heel-blank first pricked and then moved with the jack to the attaching devices, all of which will hereinafter be more fully described, together with the various details of construction.

Referring to the drawings, Figure 1 is a vertical section of a machine containing my improvement. Fig. 2 is a front elevation of the central upper parts of the machine. Fig. 3 is a vertical central section to illustrate various stops for controlling the movement of the templet or pressure plate, hereinafter referred to. Fig. 4 is a detail view which illustrates a method of locking the templet-plate down in place. Fig. 5 is a plan view of the machine. Fig. 6 is a horizontal section of the column and templet-plate sleeve on the line of the registering-pin, hereinafter described.

A represents a central post or column, upon which is reciprocated the head *a* by means of the rod B, crank *b*, and link *b'*, or any other equivalent mechanism. The head *a* carries a gang or group of awls, *a'*, a gang or group of drivers, $a^2$, and a spanker, $a^3$, (see Fig. 2,) and these are arranged preferably so that two of them—namely, the drivers and the spanker—simultaneously operate.

C is the revolving bed. It is like the revolving bed described in my application for Letters Patent of the United States filed January 13, 1885, and it supports a series of jacks or heel-supports, *c*, which preferably slide thereon. By means of these jacks or heel-supports the boots or shoes are brought successively under the templet or pressure plate E, which has a templet-block, *e*. This templet or pressure plate projects from the sleeve *e'*, which surrounds the column, and it has two movements thereon—first, a vertical movement, which is imparted to it by means of the pressure-block F, which is like that described in my said application, and a revolving movement sufficient to permit the holes of the templet-block to be used alternately, first with the awls and then with the drivers. The sleeve *e'* of this templet or pressure plate is supported upon the yielding sleeve or ring G, which is itself supported by the springs *g* about the posts *g'*, that project upward from the revolving table C and enter holes $g^2$ in the ring or sleeve G. The templet or pressure plate sleeve *e'* also has holes $a^5$, corresponding with the holes in the supporting-ring G, and these holes are so arranged that upon the movement of the templet or pressure plate into either of the positions above mentioned, and upon its downward movement, the posts will extend into the holes $a^5$, and center and lock the templet rigidly in position to the revolving table C, and when the templet or pressure plate has been so moved it is held locked down by one of the latches $g^3$, which are attached to the revolving table C, and adapted to successively engage with the catch $g^4$ on the templet or pressure plate sleeve. The ends of the posts *g'* are preferably made tapering, and the entrance to the holes $a^5$ in the templet or pressure plate sleeve enlarged.

The templet-plate is locked by the locking-pin H in two positions—namely, when the templet-block is in register with the awls, and when the templet-block is in register with the drivers and the locking-pin enters one of the two long slots or grooves *h*, arranged in the column. When the templet or pressure plate is in either of these positions, the locking-pin is forced in automatically by a spring, *h'*, so that to move the templet or pressure plate from one position to another it is first necessary to withdraw the locking-pin, and this may be done by the lever $h^2$, or in any other desired way.

The operation of so much of the invention as I have described is as follows: The boy or the attendant places the boots or shoes in successive order upon the jacks or supports, and revolves the table C to the operator, who places the first jack or support having a boot

or shoe thereon in proper position under the templet or pressure plate E. Of course there may be provided suitable shoe-centering guides and a stop for regulating the extent of the inward movement of the jack, or the jack may be moved as described in my pending application of January 20, 1885, Serial No. 153,388. The heel-blank is then placed in position, and the templet moved down by means of the treadle M, pivoted at *m*, the treadle-rod in which is connected with the templet by a pin or block, $m^2$, adapted to move vertically in a slot, $m^3$, in the column, and the templet-sleeve has a circular horizontal recess, into which this pin or lug projects, and which permits the templet-sleeve and templet to be revolved in relation to it. The machine is then set in operation and makes one reciprocation, and the pressure or templet plate is moved downward and the heel pricked by the reciprocation of the awls. The pressure-plate is locked automatically by the latch upon its downward movement, and it is then revolved with the revolving table C, the pricked heel of the boot or shoe, and said boot or shoe to a position under the drivers. The nails are then fed to the holes in the templet, the machine again reciprocated, and the nails driven. The latch $g^3$ is then released by means of the unlatching-lever $g^5$, and the templet or pressure plate is moved upward by the springs *g*, and is returned to its first position under the awls and over the next jack or work support, which has been moved into position by the movement of the first jack to the nail-driving devices. The heel-blank is placed in position and the templet moved down upon the same and operated as before, and then moved forward to the drivers. This second forward movement of the pressure-plate, work, and bed C also moves the heel first attached under the spanker and top-lift holder $a^3$, so that upon the reciprocation of the head *a* a top lift is spanked upon the heel first presented to the awls; or, if a top lift is not to be applied, the heel is spanked and the nails for attaching the second heel are simultaneously driven. After this the operation of the machine becomes uniform and regular—that is, the templet is returned to its original position and the heel pricked, and work held clamped by the pressure-plate is moved to the drivers and the drivers and the spanker simultaneously reciprocated. It will be seen that upon one reciprocation of the machine the heel is pricked, the drivers and spanker doing no work, and that upon the next reciprocation of the machine the awls do no work while the drivers and spankers simultaneously operate. The continued revolution of the table C brings the boots or shoes in succession to the templet-plate, and finally the first shoe having the heel attached reaches the attendant, who then removes it and substitutes an unheeled shoe therefor, and the work proceeds.

To load the templet, I prefer to employ a plate, N, adapted to be revolved upon the column A, and holding at its end the nail-holder *n*, having a sliding bottom, *n'*. This movable holder is adapted to be moved to a position to the rear of the templet or pressure plate and column, where it can be filled by the attendant, or automatically, and it is moved forward by the operator after the awls have been pricked, but before the drivers have been operated, in order that its nails may be discharged into the holes of the templet-block.

There may be arranged to project backward from the post or column, and as a part of the yielding presser foot or block F, the plate O, having a stationary nail-holder, *o*, provided with a sliding bottom, and which is adapted to be filled with nails, either by hand or automatically, while the carrier or movable holder *n* is being moved into position and the nails being driven.

It will be observed that the upward movement of the ring or support G of the templet or pressure plate sleeve is limited by the stops P, which project outward from the column, and that there are formed recesses *p* upon the inner side of the sleeve *e'*, which permit the vertical movement, but limit the revolving movement thereof in relation to the said stops.

The sliding plates for closing the nail-carrier *n* and nail-holder *o* are moved automatically by pins located upon the templet-plate and upon the nail-carrier plate, and by springs which return the sliding plates, as described in the various patents granted to and applications made by H. A. Henderson and myself, and need not further be described here.

The advantages of the invention arise from the simplicity of the construction of the machine and the quickness with which the work can be performed.

Having thus fully described my invention, I claim and desire to secure by Letters Patent of the United States—

1. In a heel nailing or attaching machine, the combination of the revolving table C, having a series of jacks or work-supports adapted to be brought successively into position under the templet or pressure plate E, said templet-plate, which is adapted, by mechanism substantially as specified, to have a vertical and a limited revolving movement, and the reciprocating head A, carrying heel-attaching devices, all substantially as described.

2. The combination of the revolving bed C, supporting a series of jacks or work-supports, a templet or pressure plate, E, and mechanism, substantially as described, to give it a vertical movement and limited revolving movement, all substantially as and for the purposes described.

3. The combination of the reciprocating head, a gang or group of awls, a gang or group of drivers carried in a fixed operative position thereon, a jack or work-support movable horizontally, and a templet or pressure plate movable horizontally, whereby the heel is adapted to

be first presented to the awls and then transferred with the jack and templet to the nail-drivers, all substantially as described.

4. The combination of the templet-plate E, the column or post A, and stops P, all substantially as and for the purposes described.

5. The combination of the templet-plate E, the column A, the locking-pin H, and the slots or grooves *h*, all substantially as and for the purposes described.

6. The combination of the templet-plate E, having the sleeve *e'*, provided with holes $a^5$, and the revolving table having the posts *g'*, all substantially as and for the purposes described.

7. The combination of the templet or pressure plate E, having a sleeve, *e'*, the ring or support G, and the springs *g* and posts, all substantially as and for the purposes described.

8. The combination of the templet-plate E, the treadle M, the connecting-rod *m'*, and the pin or block $m^2$, all substantially as and for the purposes described.

9. The combination of the nail-holder *o*, the revolving nail-carier *n*, and the templet or pressure block *e*, all substantially as and for the purposes described.

10. The combination of the revolving bed C, having the centering or registering posts *g'*, the bed or support G, and the springs *g*, with the templet sleeve or supports *e'*, all substantially as and for the purposes described.

11. The combination of the templet or pressure plate E, the nail-carrier plate N, and the bar or ring F, all substantially as and for the purposes described.

12. The combination of the templet or pressure plate with the yielding pressure-ring F, for moving the same vertically downward, and the yielding pressure-ring G, and suitable lifting-springs for moving it vertically upward, all substantially as and for the purposes described.

13. The combination of the templet sleeve or support *e'*, having a number of holes, $a^5$, and adapted to be revolved with the locking-posts *g'*, the holes and locking-posts being arranged substantially as described, that the same holes will register with two or more sets of posts, all substantially as and for the purposes described.

14. The combination of the templet sleeve or support *e'*, having a circular groove or recess for the reception of the pin $m^2$, said pin $m^2$, treadle-rod *m'*, and treadle M, all substantially as and for the purposes described.

FREEBORN F. RAYMOND, 2D.

Witnesses:
J. M. DOLAN,
FRED. B. DOLAN.