March 22, 1932. T. T. GREENWOOD 1,850,321

INTERRUPTING ELECTRIC CIRCUITS

Filed Feb. 1, 1929

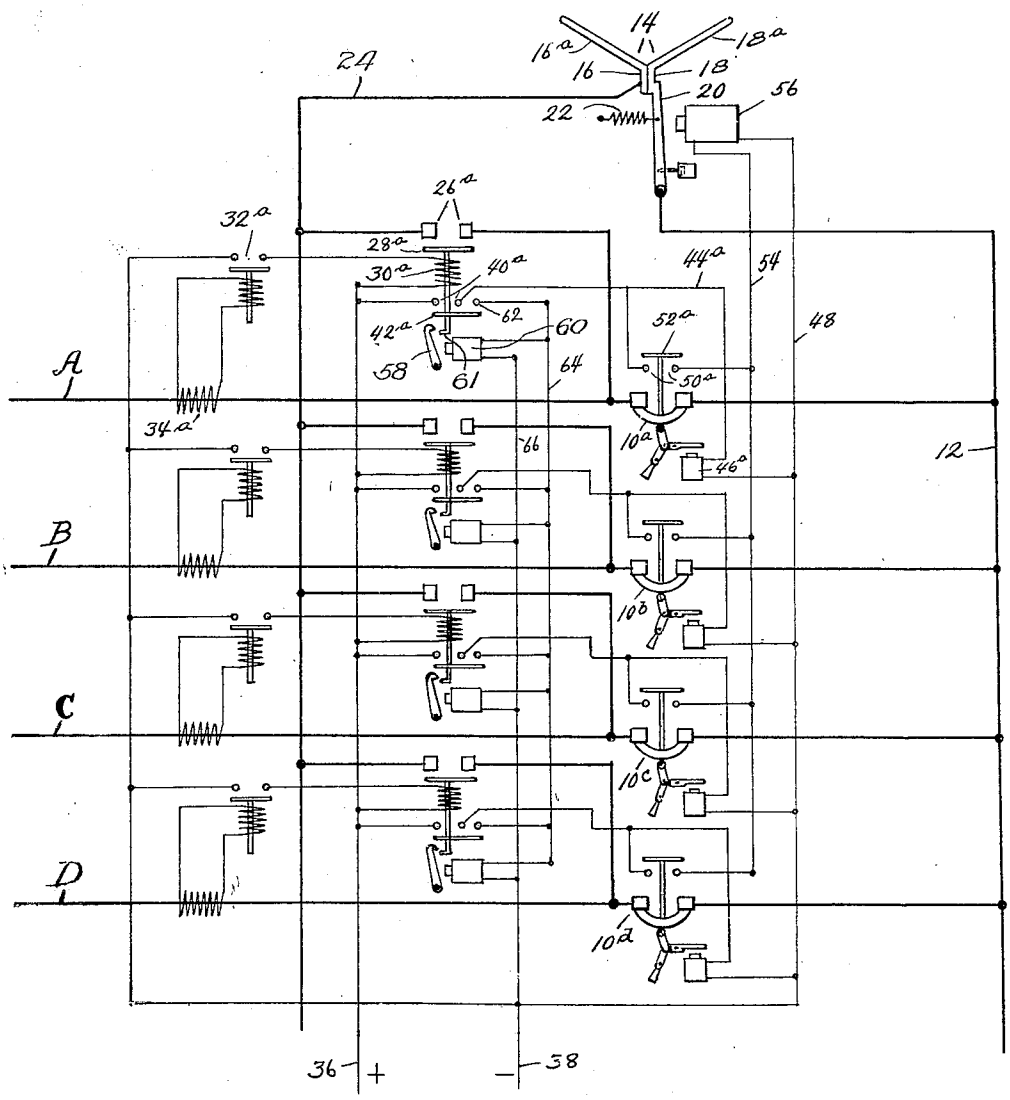

Inventor.

Talbot T. Greenwood

Patented Mar. 22, 1932

1,850,321

UNITED STATES PATENT OFFICE

TALMA T. GREENWOOD, OF EAST TEMPLETON, MASSACHUSETTS, ASSIGNOR TO CONDIT ELECTRICAL MANUFACTURING CORPORATION, OF SOUTH BOSTON, MASSACHUSETTS, A CORPORATION OF MASSACHUSETTS

INTERRUPTING ELECTRIC CIRCUITS

Application filed February 1, 1929. Serial No. 336,817.

This invention relates to a method of and system for interrupting high power electric circuits.

Electric power distribution systems are becoming so large in capacity that the current which any one switch of a circuit connected to a system may be called upon to interrupt on short circuit can be very large. The only practical switch at present known for handling large powers at high voltage is an oil immersed switch. This switch must be very large and expensive and must occupy a relative large amount of space. It is also subject to internal explosions which may damage the switch and to the expulsion of burning oil and hot, explosive gases about its vicinity, the presence of which can cause a vast amount of damage.

An object of the present invention is a system for interrupting high power circuits wherein the circuit is controlled and the current is carried by any suitable current carrying switch and wherein the circuit is interrupted under heavy load at some remote point and under conditions where the products of the circuit interrupting arc can not cause damage.

A further object of the invention is the provision of a circuit interrupter which can have relatively large dimensions and is able to interrupt successfully high values of current at high potential, which is disposed at some convenient locality as for instance on the roof of a station or in a vacant lot adjacent the station or in some especially designed room, and which is common to a plurality of circuits and is adapted to be connected to any circuit that is overloaded to interrupt the flow of power therein.

A further object of the invention is the provision of a plurality of distribution circuits each having a current carrying switch therein which controls the connection of the circuit to the system and a normally closed circuit interrupter common to all of but normally free from operative connection with the circuits of the system, and means responsive to overload or other abnormal conditions in any circuit to connect the circuit interrupter across the current carrying switch of the overloaded circuit and to effect the opening of the switch whereby to transfer the load to the circuit interrupter and thereafter to effect the opening of the interrupter, whereby to interrupt the flow of power in the overloaded circuit.

A further object of the invention is the provision of a plurality of distribution circuits each having a current carrying switch therein and a circuit interrupter common to all of the circuits for interrupting the power therein, with means for transferring an overloaded circuit to the normally closed interrupter and opening the switch of the overloaded circuit, and interlocking means so arranged that the interrupter can not be connected to an overloaded circuit while it is functioning to interrupt a previously overloaded circuit.

A further object of the invention is generally to improve upon circuit interrupting methods and systems.

The figure is a diagrammatic representation of a power distributing and circuit interrupting system embodying the invention.

The power distribution system may include any number of separate conductors here shown as four conductors A, B, C, D, respectively which are connected through separate switches 10*a*, 10*b*, 10*c* and 10*d* with a common bus 12. In accordance with the present invention said switches are adapted merely to carry the currents in their respective circuits but are not adapted to interrupt the circuits under any material load, and especially when they are heavily overloaded. Said switches thus may be of relatively inexpensive construction and can be of the air break type, or, if of the oil break type, the enclosing casings need not be strong as no severe pressures are intended to be set

up therein when the switches open. A circuit interrupter 14 is common to all of the aforesaid circuits and is arranged to interrupt the flow of power in any one of said circuits when the circuit is overloaded. The interrupter can be located remote from the current carrying switches and in some location where the products of the circuit interrupting arc can not cause damage and where the arc products can be dissipated freely. The circuit interrupter can have large dimensions since it is isolated by itself and thus can interrupt circuits having a large amount of power therein.

The circuit interrupter here diagrammatically shown is of the magnetic blow-out type and includes the stationary contact member 16 and the movable contact member 18 which latter is carried at the end of a pivoted switch arm 20. The contact members are normally maintained in engagement and the interrupter is thereby maintained normally closed by suitable means as the retractile spring 22 which is connected between said arm 20 and a fixed support. Long and divergent arcing horns 16*a* and 18*a* are associated with said contact members and extend in opposite directions. Magnetic means well known in the art and not herein necessary to illustrate, or other means, are employed to cause the ends of the arc to travel outwardly along said arcing horns whereby to distend and ultimately to interrupt the arc and thereby the circuit that may be connected with the interrupter at the time it operates. One of said contact members, as the contact member 16, is connected with an interrupter bus 24 which is associated with all of said distribution circuits A, B, C, D and the other contact member of the interrupter is connected to the feeder bus 12.

Means responsive to an overload or other abnormal condition are provided to connect said interrupter with any one of said distribution circuits. Said means include a transfer switch which is associated with each circuit and is arranged to connect the circuit with the interrupter bus 24 ahead of the current carrying switch of the circuit. The transfer switches of the circuits are or can be identical and but one will be described.

The transfer switch associated with the circuit A has the stationary contact members 26*a* which are connected respectively with the interrupter bus 24 and with the circuit A ahead of the current carrying switch 10*a*.

A bridging member 28*a* serves to bridge the contact members 26*a* whereby to place the interrupter 14 in shunting relation with the switch 10*a*. The bridging member 28*a*, however, is normally free from contact with the contact members 26*a* except when the circuit A is overloaded. The transfer switch is arranged merely to carry the current of the circuit and so can be of relatively inexpensive construction.

The actuating coil or winding 30*a* of the transfer switch is controlled by a relay 32*a* which is suitably energized from the circuit A, as by the current transformer 34*a* in said circuit. When said relay 32*a* is operated it serves to connect the actuating coil 30*a* of the transfer switch with the auxiliary or control buses 36 and 38 of the station.

The operation of the transfer switch to connect the interrupter with the circuit A is also arranged to effect the opening of the current carrying switch 10*a* and the subsequent opening of the interrupter. To this end, the transfer switch is provided with a set of auxiliary contact members 40*a* which, when the transfer switch is closed, are adapted to be bridged by a bridging member 42*a* and establish an electric circuit from the control bus 36 through the conductor 44*a* and through the tripping or opening coil 46*a* of the switch 10*a* and thence through the conductor 48 to the other auxiliary bus 38. The entire current in the circuit A then passes through the closed interrupter 14.

After the switch 10*a* has opened, the interrupter is adapted to open. To this end, the current carrying switch is provided with an auxiliary switch having the stationary contact members 50*a* which, when the switch 10*a* is open, are adapted to be bridged by the bridging member 52*a* thereby to complete the circuit from the control bus 36 through the auxiliary contacts of the transfer switch, the conductor 44*a* to the conductor 54 and from said conductor through the opening coil 56 of the circuit interrupter and thence through conductor 48 to the other control bus 38. Thus, after the current carrying switch 10*a* has been opened, the interrupter 14 opens and operates to interrupt the power in the circuit A. After the circuit has been interrupted, the relay 32*a* becomes de-energized and opens, thus de-energizing the actuating winding 30*a* of the transfer switch. The transfer switch thus opens and de-energizes the circuit for the opening coil 56 of the interrupter. The interrupter then recloses automatically under action of its reclosing spring 22 or other equivalent means.

The operation of the corresponding apparatus of the other distribution circuits B, C and D is essentially the same to connect their respective circuits to the interrupter.

As thus arranged, if two circuits become overloaded simultaneously, they will both be connected simultaneously with the interrupter 14. It may be undesirable, however, to connect one overloaded circuit with the interrupter at the time the interrupter is partially opened in the act of interrupting the power in a previously overloaded circuit. To this end, means are provided and so arranged that the closing of any one transfer

switch, or the opening of the interrupter, locks all of the other transfer switches from operation until the operated transfer switch has been restored to a normally open position, or until the interrupter is reclosed. The interlocking means here shown includes for each transfer switch a latch 58 and a control electro-magnet or winding 60 which is arranged when energized to move the latch from a normal unoperated position into a position where it can engage a projection 61 of the movable element of the unoperated transfer switch and hold it from operation.

Each transfer switch has a third auxiliary contact member 62 which is connected to a conductor 64 that is common with one terminal of all of the locking windings 60. The other terminals of all of said locking windings are connected to a conductor 66 that is connected to the control bus 38. As thus arranged, when any one of the transfer switches operates, the locking circuit is established from the bus 36 through the conductor 64 and all of the locking windings 60 to the other bus 38, thereby to move the latches 58 into position to hold down all of the transfer switches except the one that has operated. The latch for the operated transfer switch will be ineffective since the transfer switch will have been closed and the projection 61 thereof moved out of co-acting relation with its latch before the lockout circuit has been completed. The locking out of all of the transfer switches except the first one that operates can be effected under control of the circuit interrupter 14 if desired. To this end, the interrupter can be provided with an auxiliary switch having a movable member and a pair of stationary contacts which are connected respectively with the control bus 36 and the conductor 64. As thus arranged when the interrupter 14 opens, all of the lockout windings 60 will be energized as before. The provision of an auxiliary switch on the interrupter eliminates the necessity for the third auxiliary contacts 62 of the transfer switches.

I claim:

1. A power distribution circuit having a normally closed current-carrying switch therein, a normally closed circuit interrupter, means responsive to an abnormal condition in said circuit for shunting said interrupter across said switch and also for removing it from such shunting relation, means for opening said shunted switch, means for thereafter opening said interrupter, and means governed by the operation of said first named means for reclosing said interrupter after it has been removed from its shunting relation with said switch.

2. A power distribution circuit having a normally closed current-carrying switch therein, a normally closed circuit interrupter, an overload responsive transfer switch arranged to connect said interrupter in shunting relation with said current-carrying switch, and means controlled by said transfer switch to effect the opening of said current-carrying switch and the subsequent opening of said interrupter, said transfer switch also arranged to disconnect said interrupter from the circuit after the power therein has been interrupted, and means governed by the opening of said transfer switch to effect the closing of said interrupter after it has been disconnected from the circuit.

3. A power distribution system having a plurality of circuits each including a normally closed current-carrying switch, a normally closed circuit interrupter common to all of said circuits, means associated with each circuit for connecting said circuit interrupter in shunting relation with the current carrying switch of any one of said circuits when it is overloaded, means for opening said switch and for subsequently opening said interrupter and for disconnecting it from said circuit, and means responsive to the operation of any one of said first named means for reclosing said interrupter.

4. A power distribution system having a feeder bus, a plurality of circuits connected therewith and each having a current-carrying switch therein, an interrupter bus, a circuit interrupter for all of said circuits connected between said interrupter and feeder buses, transfer switches for connecting said interrupter bus with said circuits ahead of said current-carrying switches when the circuits are overloaded, means effective upon the closing of a transfer switch to open the current-carrying switch of the circuit associated therewith and thereafter to effect the opening of said circuit interrupter, said transfer switches also arranged to disconnect their respective circuits from said interrupter bus, and means controlled by any one of said transfer switches during opening movement thereof to reclose the disconnected interrupter.

5. A power distribution system having a plurality of circuits each including a current-carrying switch therein, a circuit interrupter common to all of said circuits, means associated with each circuit for connecting said circuit interrupter in shunting relation with the switch of a circuit when it is overloaded for interrupting said circuit, and interlocking means connecting all of the aforesaid means arranged when any one of said aforesaid means is operating to lock all of said other aforesaid means from operation when they are energized to operate.

6. A power distribution system having a plurality of circuits each including a current-carrying switch therein, a normally closed circuit interrupter common to all of said circuits for interrupting them, a transfer switch associated with each circuit for connecting its current-carrying switch in shunting relation

with said interrupter, means for effecting the opening of said shunted current-carrying switch and the subsequent opening of said interrupter, and interlocking means associated with said transfer switches and operated by the closing of any one transfer switch to lock all other transfer switches from closing for preventing the operation of such of said switches as have not operated at the time one thereof has gained control of said interrupter.

7. In combination, a plurality of circuit breakers, individual opening means for each breaker, individual means associated with each breaker for energizing the opening means thereof to open each of the breakers dependently of all other breakers, and means connected and arranged whereby the operation of any one of said second mentioned means permits the operation of the opening means for the circuit breaker associated therewith if none of the other opening means is operating and prevents the operation of the opening means for the other circuit breakers while the opening means for the circuit breaker associated therewith is operating.

8. An electric distribution system comprising a bus, a plurality of feeder circuits, circuit breakers for connecting each feeder separately with said bus, a circuit interrupter common to all of said feeders, a transfer switch associated with each feeder circuit and responsive to an abnormal condition therein for connecting its circuit through said interrupter with said bus and shunting its circuit breaker, means responsive to the closing of a transfer switch to subsequently open the circuit breaker associated therewith and also to open said interrupter, locking mechanism which is normally in a released position for locking each of said transfer switches in open position against closing and means responsive to the closing of any one transfer switch for holding said locking mechanism in locking relation with all of the transfer switches except the one which has closed.

9. The combination of a plurality of feeders, an interrupter common to all feeders, means for connecting any feeder to and disconnecting it from said interrupter and for opening the interrupter when a feeder is connected thereto, and means for preventing the connection of all other feeders to the interrupter while one feeder is connected thereto, and for freeing all other feeders for connection to the interrupter only after the previously-connected feeder has been disconnected from the interrupter.

10. The combination with a plurality of feeders, of an automatically-reconditioned overload protective system therefor comprising an interrupter common to all feeders adapted to open to interrupt the current in any feeder connected thereto, means responsive to an overload in a feeder which connects the feeder to the interrupter and which subsequently automatically disconnects it therefrom, means also responsive to an overload on a feeder which locks all other feeders against connection to the interrupter and which frees the other feeders for connection to the interrupter only after the overloaded feeder has been disconnected therefrom, and means responsive to the disconnection of the overloaded feeder from the interrupter which effects the reclosing of the interrupter.

In testimony whereof, I have signed my name to this specification.

TALMA T. GREENWOOD.