United States Patent [19]

Bonner et al.

[11] **3,774,217**

[45] **Nov. 20, 1973**

[54] **RADIO CONTROL SYSTEM FOR MOBILE AERIAL PLATFORMS**

[75] Inventors: **Robert B. Bonner**, New Hope; **John F. Wiehe, Jr.**, Roseville, both of Minn.

[73] Assignee: **Tele-E-Lect, Inc.**, South Minneapolis, Minn.

[22] Filed: **Feb. 21, 1973**

[21] Appl. No.: **334,284**

Related U.S. Application Data

[63] Continuation of Ser. No. 249,382, May 1, 1972, abandoned.

[52] **U.S. Cl.** ..... **343/225**, 182/148, 212/8 R, 212/35 HC, 340/171 PF

[51] **Int. Cl.** **B66c 23/62**

[58] **Field of Search** 343/225; 340/163, 340/171; 212/8, 35; 182/148; 318/16

[56] **References Cited**

UNITED STATES PATENTS

3,055,459	9/1962	Eitel	212/8 R
3,454,927	7/1969	Dame	318/16 X
3,480,109	11/1969	Eitel	182/148

Primary Examiner—Donald J. Yusko

Attorney—E. J. Schroeder et al.

[57] **ABSTRACT**

This invention is directed to an improved control system for articulated scaffoldings or mobile aerial towers employing a plurality of hydraulic actuators and an improved electric hydraulic control for operation of the same from a remote source through a portable transmitter and receiver combination. The transmitter includes a plurality of control handles and associated logic equipment to convert analogue directional and speed control signals into binary digital form for transmission by the transmitter on a modulated carrier frequency. The receiver which is mounted at the base of the tower receives the transmission and demodulates the signals converting them from binary digital form to analogue form for the purpose of proportionately energizing control valves operating the hydraulic motor for directional and speed controls of the motor. Included in this system is a bypass control for isolating the hydraulic system whenever the transmitter or receiver is inoperative or any type power failure may be experienced to insure against accidental or undesired movement of the hydraulic actuators thereof. Power is applied to the transmitter with operation of any of the manual controls and with reception of the signal at the receiver, the bypass control is opened allowing hydraulic fluid to flow to the motors for control purposes. The improved control system includes provision for manual override control on the control valves from the receiver site.

20 Claims, 10 Drawing Figures

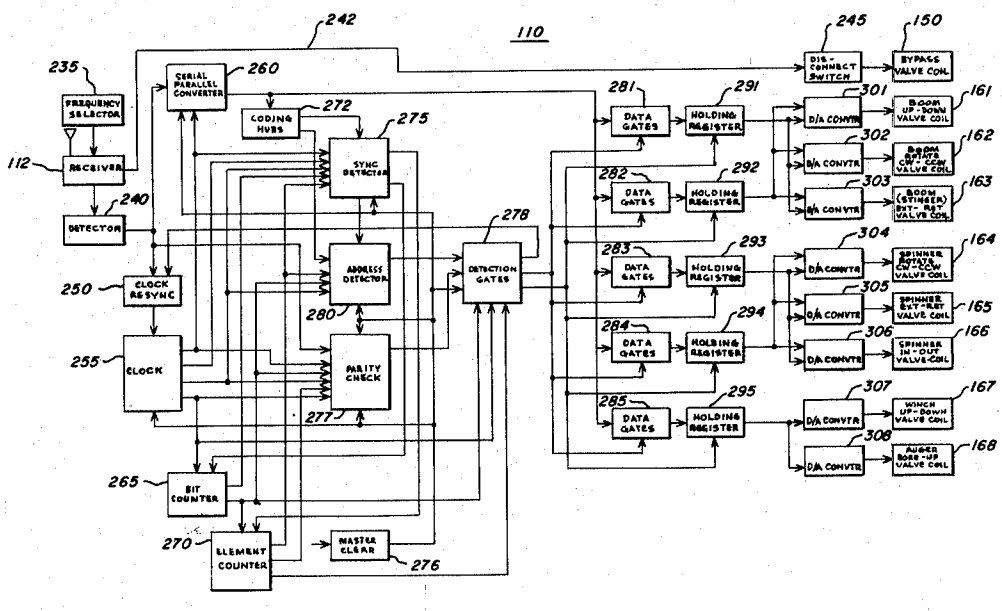

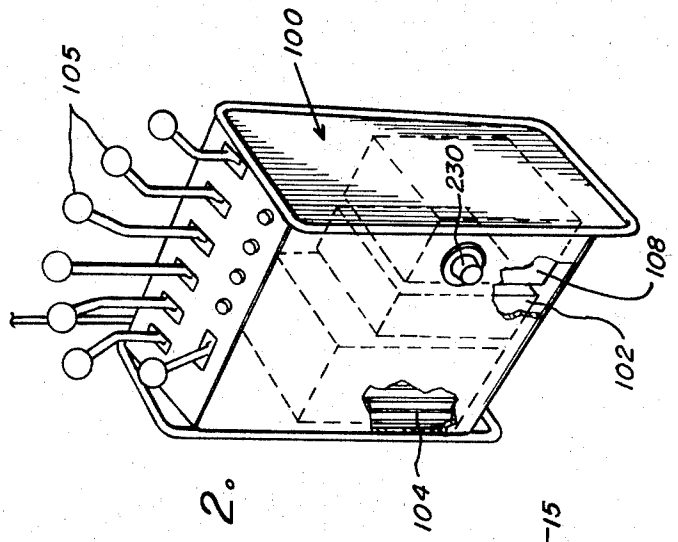

FIG. 2.

FIG. 1.

FIG. 3.

FIG. 4.

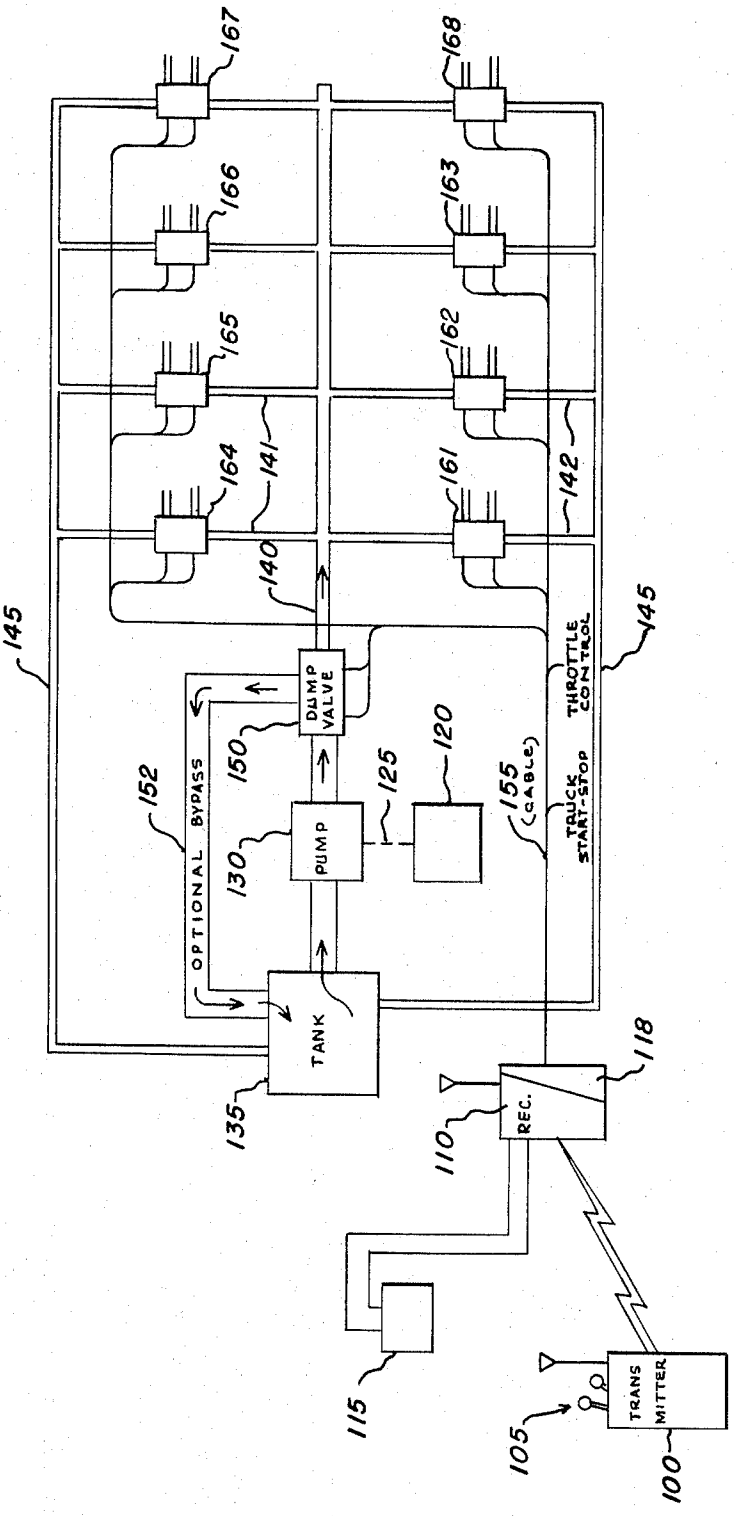
167
168
166
163
165
162
164
141
161
142
140
145
145
DUMP VALVE
THROTTLE CONTROL
150
120
152
125
155 (CABLE)
OPTIONAL BYPASS
PUMP
130
TRUCK START-STOP
TANK
118
135
REC.
110
115
105
TRANS MITTER
100

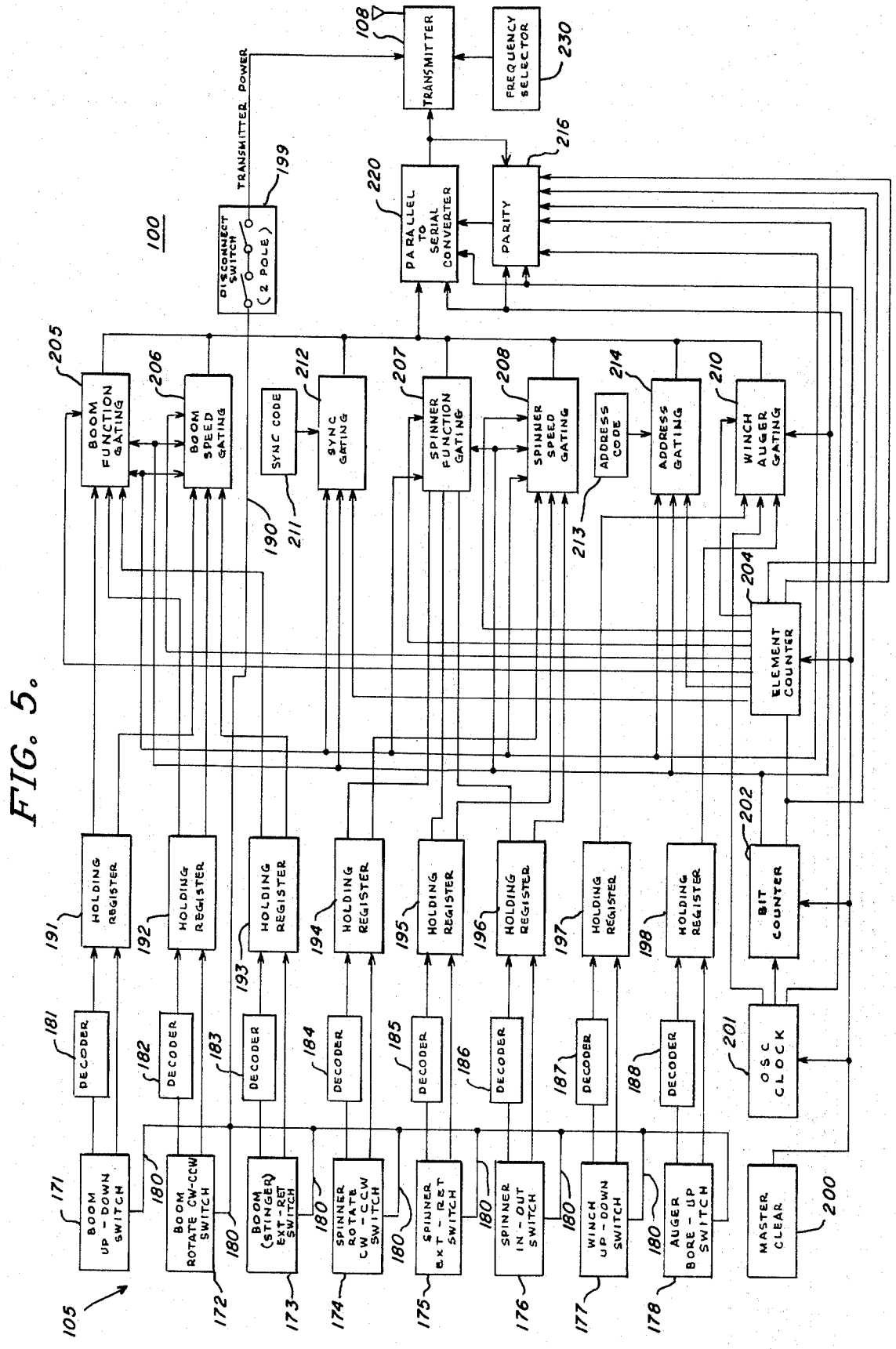
100
TRANSMITTER POWER
DISCONNECT SWITCH (2 POLE)
199
TRANSMITTER
108
FREQUENCY SELECTOR
230
PARALLEL TO SERIAL CONVERTER
220
PARITY
216
BOOM FUNCTION GATING
205
BOOM SPEED GATING
206
SYNC CODE
211
SYNC GATING
212
SPINNER FUNCTION GATING
207
SPINNER SPEED GATING
208
ADDRESS CODE
213
ADDRESS GATING
214
WINCH AUGER GATING
210
ELEMENT COUNTER
204
BIT COUNTER
202
OSC CLOCK
201
MASTER CLEAR
200
HOLDING REGISTER
191
HOLDING REGISTER
192
HOLDING REGISTER
193
HOLDING REGISTER
194
HOLDING REGISTER
195
HOLDING REGISTER
196
HOLDING REGISTER
197
HOLDING REGISTER
198
DECODER
181
DECODER
182
DECODER
183
DECODER
184
DECODER
185
DECODER
186
DECODER
187
DECODER
188
BOOM UP - DOWN SWITCH
171
BOOM ROTATE CW-CCW SWITCH
172
BOOM (STINGER) EXT-RET SWITCH
173
SPINNER ROTATE CW - CCW SWITCH
174
SPINNER EXT - RET SWITCH
175
SPINNER IN - OUT SWITCH
176
WINCH UP - DOWN SWITCH
177
AUGER BORE - UP SWITCH
178
180
105

FIG. 5.

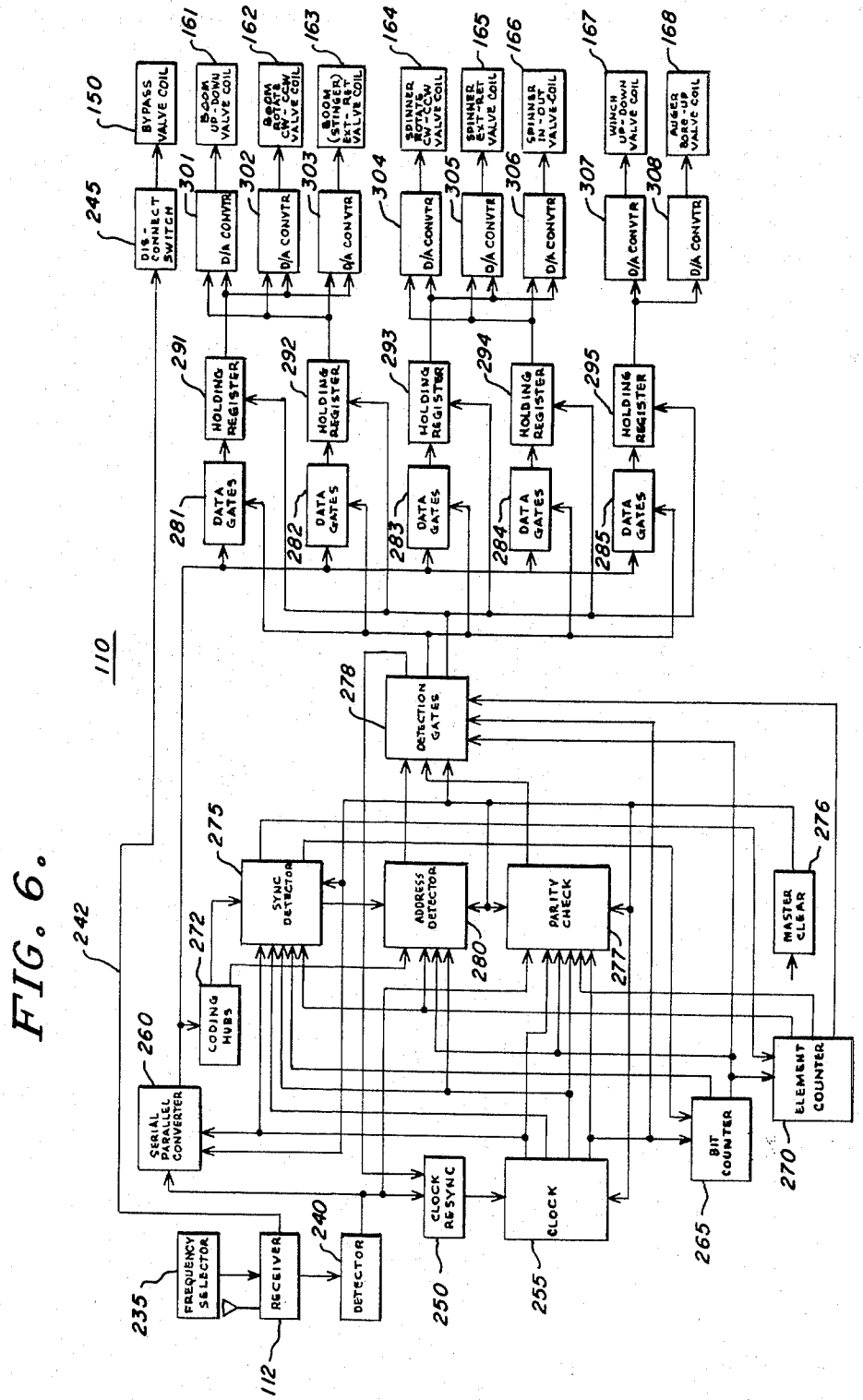
110
150
161
162
163
164
165
166
167
168
245
301
302
303
304
305
306
307
308
BYPASS VALVE COIL
BOOM UP-DOWN VALVE COIL
BOOM ROTATE CW-CCW VALVE COIL
BOOM (STINGER) EXT-RET VALVE COIL
SPINNER ROTATE CW-CCW VALVE COIL
SPINNER EXT-RET VALVE COIL
SPINNER IN-OUT VALVE COIL
WINCH UP-DOWN VALVE COIL
AUGER BORE-UP VALVE COIL
DIS-CONNECT SWITCH
D/A CONVTR
291
292
293
294
295
HOLDING REGISTER
281
282
283
284
285
DATA GATES
278
DETECTION GATES
275
276
SYNC DETECTOR
ADDRESS DETECTOR
PARITY CHECK
MASTER CLEAR
272
280
277
CODING HUBS
260
SERIAL PARALLEL CONVERTER
ELEMENT COUNTER
270
BIT COUNTER
265
CLOCK
255
CLOCK RESYNC
250
240
RECEIVER
DETECTOR
235
FREQUENCY SELECTOR
112
242

FIG. 6.

FIG. 7.

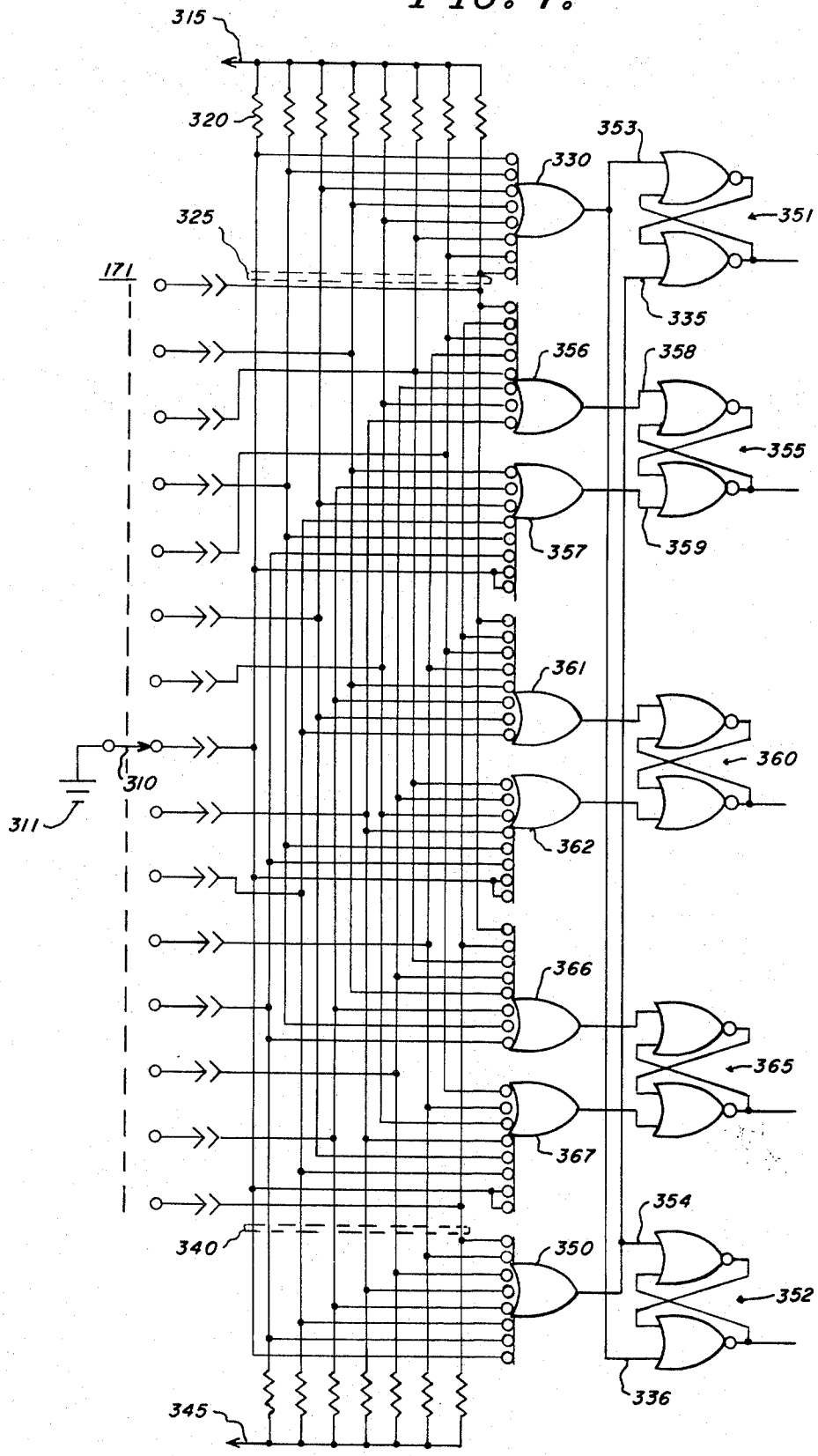
315
320
325
171
310
311
340
345
330
356
357
361
362
366
367
350
353
351
335
358
355
359
360
365
354
352
336

FIG. 8.

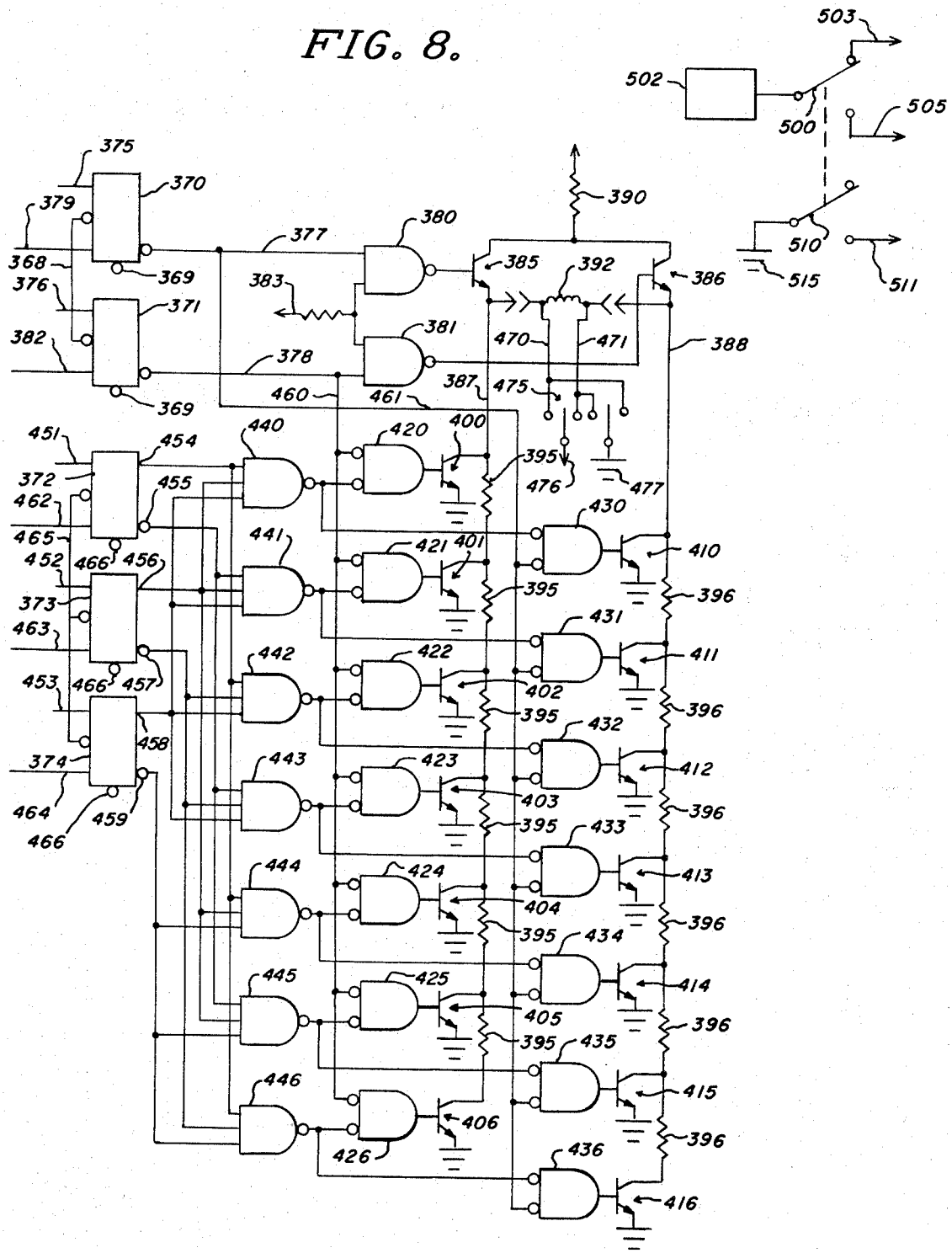
503
502
500
505
510
515
511
375
370
379
368
369
376
371
382
369
377
380
383
381
378
460
461
390
385
392
386
470
471
388
387
475
395
476
477
451
454
372
462
455
465
452
466
456
373
463
466
457
453
466
458
374
464
459
466
440
420
400
441
421
401
442
422
402
443
423
403
444
424
404
445
425
405
446
426
406
430
410
431
411
432
412
433
413
434
414
435
415
436
416
396

FIG. 9.

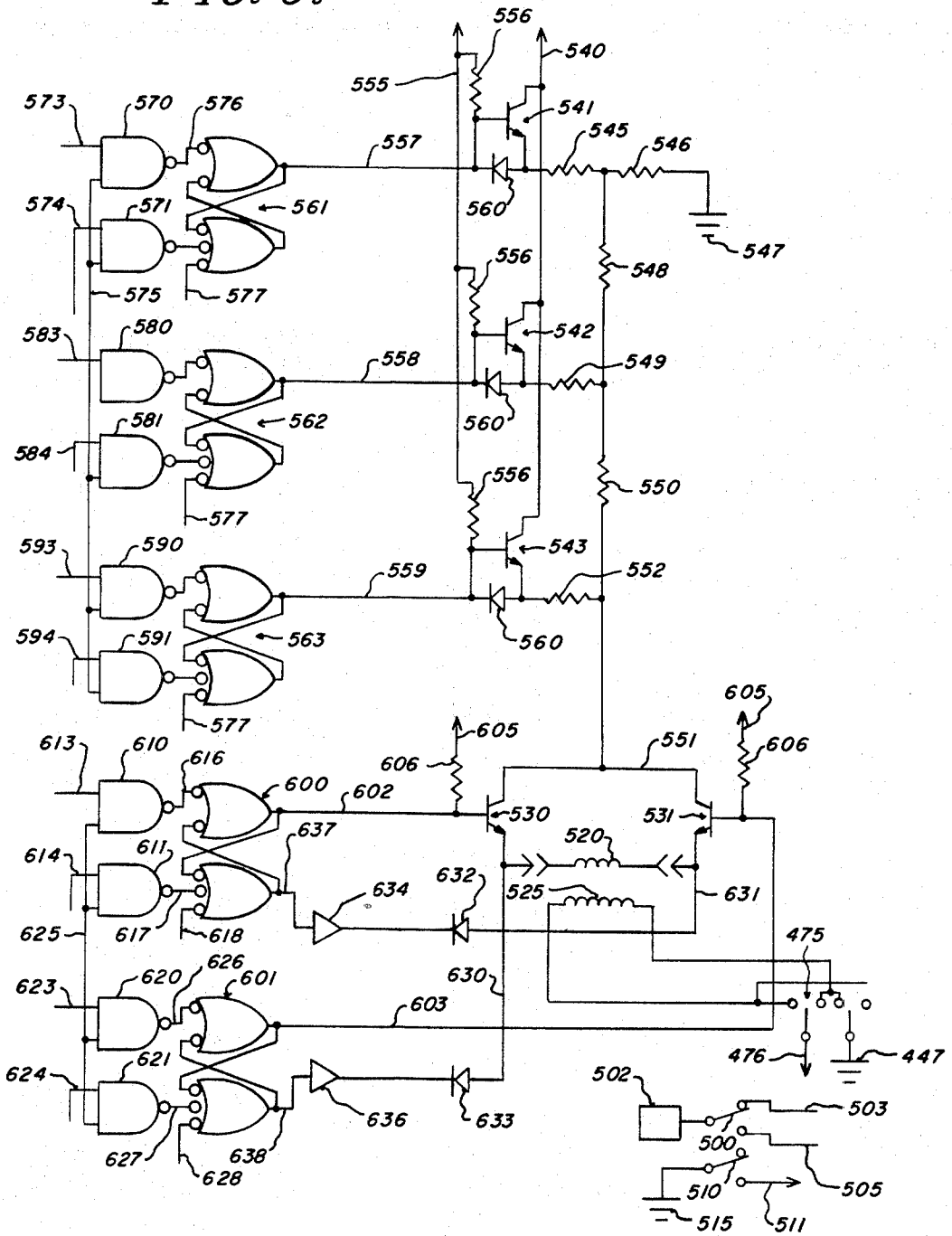
556
540
555
573
570
576
541
545
546
557
574
571
561
560
547
556
548
575
577
542
583
580
558
549
581
562
560
584
556
550
577
543
593
590
559
552
594
591
563
560
577
605
613
610
616
605
606
551
606
600
602
530
531
637
520
614
611
632
634
525
631
625
617
618
475
630
620
626
601
623
603
621
476
447
624
636
633
502
503
638
500
627
628
505
510
515
511

MESSAGE

SYNC WORD	ADDRESS WORD	DATA WORD 1	DATA WORD 2	DATA WORD 3	DATA WORD 4	DATA WORD 5	SYNC WORD
1 2 3 4 5 6 7 8 9 10 11	1 2 3 4 5 6 7 8 9 10 11	1 2 3 4 5 6 7 8 9 10 11	1 2 3 4 5 6 7 8 9 10 11	1 2 3 4 5 6 7 8 9 10 11	1 2 3 4 5 6 7 8 9 10 11	1 2 3 4 5 6 7 8 9 10 11	1 2 3 4 5 6 7 8 9 10 11
4 FIXED CONFIGURATIONS	DIFFERENT FOR EVERY TRUCK						

DATA WORD 1

BIT 1	BIT 2	BIT 3	BIT 4	BIT 5	BIT 6	BIT 7	BIT 8	BIT 9	BIT 10	BIT 11
DERRICK LIFT UP	DERRICK LIFT DOWN	DERRICK RIGHT (CW)	DERRICK LEFT (CCW)	STINGER EXTEND	STINGER RETRACT	TRUCK ENGINE START	TRUCK ENGINE STOP	THROTTLE INCREASE	THROTTLE DECREASE	PARITY

DATA WORD 2

BIT 1	BIT 2	BIT 3	BIT 4	BIT 5	BIT 6	BIT 7	BIT 8	BIT 9	BIT 10	BIT 11
DERRICK SPEED									AUGER HIGH RANGE	PARITY
UP/DOWN 1	UP/DOWN 2	UP/DOWN 4	RT/LFT 1	RT/LFT 2	RT/LFT 4	EXT/RET 1	EXT/RET 2	EXT/RET 4		

DATA WORD 3

BIT 1	BIT 2	BIT 3	BIT 4	BIT 5	BIT 6	BIT 7	BIT 8	BIT 9	BIT 10	BIT 11
SPINNER						POLE GRABBER				PARITY
ROTATE		LATERAL		TROLLEY		DIRECTION		JAWS		
CCW	CW	IN	OUT	EXTEND	RETRACT	UP	DOWN	OPEN	CLOSE	

DATA WORD 4

BIT 1	BIT 2	BIT 3	BIT 4	BIT 5	BIT 6	BIT 7	BIT 8	BIT 9	BIT 10	BIT 11
SPINNER SPEED									SPARE	PARITY
ROTATE			LATERAL			TROLLEY				
1	2	4	1	2	4	1	2	4		

DATA WORD 5

BIT 1	BIT 2	BIT 3	BIT 4	BIT 5	BIT 6	BIT 7	BIT 8	BIT 9	BIT 10	BIT 11
WINCH / AUGER					SPARE	SPARE	SPARE	SPARE	SPARE	PARITY
DIRECTION		SPEED								
UP	DOWN	1	2	3						

FIG. 10.

RADIO CONTROL SYSTEM FOR MOBILE AERIAL PLATFORMS

This is a continuation, of application Ser. No. 249,382, filed May 1, 1972, now abandoned.

Our invention relates to control systems of the remote type for mobile aerial platforms, scaffolds or towers and more particularly to an improved control system utilizing radio control from a portable transmitter and overriding control from the receiver on the platform.

In the past radio type transmission has been utilized for the operation of motors at a remote point, the steering of vehicles and the transmission of data. Radio type controllers have been used as remote control command posts for traveling hoists and cranes where radio frequency transmission from a portable transmitter was utilized in connection with the operation of motors on hoists and cranes. Selected frequencies were used for the respective channels operating the respective motors and the signals therefrom were of the analogue type. This limited the number of responses that could be controlled and provided for generally complex equipment. Digital code transmission has also been utilized in the past in connection with remote control of motors, but in such systems motor response is controlled only from the transmitter and without provision for override or secondary control. In most instances, the motors controlled were of the electric type and the sources of power available at both the transmitting and receiving locations were such that these particular systems did not lend themselves to remote operation of mobile platforms where the power sources available were limited and for the most part motor control was effected by other than electric source. The problems of applying radio transmission in the form of a controller for mobile aerial towers and platforms has heretofore not been undertaken because of the requirements of extreme portability of the transmitter, limited electrical power of the receiver source and the use of hydraulic fluid as the motive source for the motors controlling the same. In such apparatus, it was required that the particular elements of the boom or tower be maintained in a fixed position when the controls were not operating and the need was present for simplified override control to insure against any malfunctions of the apparatus when working around the electrical transmission lines.

The improved control system of the present invention incorporates the use of radio transmission in the form of a portable battery powered transmitter that may be taken by the operator into the platform of the tower or scaffold or be used to control from any location on or away from the tower. This would provide access and desired visibility for the operator when performing working functions with the mobile aerial tower. The improved control system utilizes a plurality of lever operated switches to provide analogue type signals for direction and speed control of motors which analogue signals are converted to binary digital signals and transmitted from the transmitter by carrier frequency modulation to a receiver wherein they are detected along with an address and sync signal to check the quality of transmission and the correct apparatus for a response. These signals are converted to analogue signals and used to control valves of the hydraulic motors for direction and speed control of the various components of the mobile aerial tower including working

tools thereon. The transmitter is not powered unless the transmitter controls are operated so that no drain on the battery source occurs during periods when the transmitter is not operating. The hydraulic control system at the receiver holds the motors in a locked position whenever they are not controllably energized to insure rigidity of the boom elements, and, upon the presence of a signal at the receiver, a bypass valve in the systems is operated permitting hydraulic fluid to flow through the control valves to the motor for operating the same. The improved system includes an electrical override at the receiver of the control valves for manual operation by a second operator located on the tower in the event of incapacity of the primary operator or malfunction of the transmitting or receiving equipment.

It is therefore an object of this invention to provide an improved remote control system for booms and mobile aerial towers of the radio frequency type.

Another object of this invention is to provide an improved radio control system in which the transmitter is energized only upon the operation of the control handle providing a command to the receiver indicative of need of operation of a motor.

A further object of this invention is to provide an improved radio frequency control system utilizing modulated carrier coded signals for a variety of direction and speed control commands to the motors of the equipment.

A further object of this invention is to provide in a radio control system of this type an improved binary digital to analogue converter for selectively energizing hydraulic motors for directional and speed control.

A still further object of this invention is to provide an improved and simplified override control for a system of this type.

These and other objects of this invention will become apparent from a reading of the attached description together with the drawings wherein:

FIG. 1 is a perspective view of a mobile aerial tower employing our invention;

FIG. 2 is a perspective view of the portable transmitter of our improved radio control system for a mobile aerial tower;

FIG. 3 is a perspective view of the receiver as mounted on the base of the mobile aerial tower;

FIG. 4 is a schematic view of the hydraulic system employed in the control of the motors for the mobile aerial tower;

FIG. 5 is a block diagram of the transmitter portion of the radio control system for the mobile aerial tower;

FIG. 6 is a block diagram of the receiver of the radio control system for the mobile aerial tower;

FIG. 7 is a schematic circuit diagram of a portion of the transmitter showing the analogue to digital conversion of one of the command switches therein;

FIG. 8 is a schematic circuit diagram of a digital to analogue converter portion of the receiver for one of the motors in the mobile aerial tower;

FIG. 9 is a schematic circuit diagram of an alternate embodiment of the digital to analogue converter portion of the receiver controlling the valves for the motors of the frame or of the hydraulic system of the mobile aerial tower; and

FIG. 10 is a diagram showing the components of a transmission message from the transmitter.

Our invention in a radio type control system for an articulated scaffold is shown herein in connection with a mobile aerial tower as one type of mobile scaffolding with which our improved radio type control may be employed. Where the word articulated is used hereinafter in the description and claims it will be understood that it encompasses booms, scaffolds, platforms, cranes and similar structures wherein parts thereof move relative to one another in at least two directions which are separated and may be transverse to one another. Thus, in FIG. 1, the mobile aerial tower is indicated generally at 10 as being mounted on a mobile chassis or truck body such as is indicated fragmentarily at 11. The truck or mobile structure will have a power plant source adapted to provide the source of hydraulic pressure for the motors of the articulated structure and a suitable electrical generating equipment and a battery power supply for the electrical portion thereof. The tower includes a base or platform 12 carried by the chassis which mounts a turntable type support 14 adapted to be oriented about a vertical axis to swing the tower in azimuth. It includes a suitable hydraulic motor indicated at 13 for rotating the same continuously or through 360° bidirectionally. The tower includes a main or root boom element 16 having a telescopically mounted boom element 20 slidably mounted therein with the main boom element 16 being pivotally mounted on an upstanding portion of the turntable through pivot structure 15 pivoting the boom about a horizontal axis for elevation of the same. A suitable hydraulic motor is indicated at 18 coupled between the turntable and the boom structure lowers or raises the same on the turntable. The slidably mounted boom element 20 is shown in the drawings as including a third or internal slidably mounted element 30 having a suitable winch structure 40 at the free end of the same. The boom element 20 is slidably positioned within the base or root element 16 by means of a hydraulic actuator 22 connected between the boom element 16 and the boom element 20 and adapted to extend and retract the same in the base or boom element 16. Also included in the mobile aerial tower is a personnel supporting basket or platform 50 which is carried by an elbow member or support member 60 which in turn is pivotally mounted on a support bracket 70, the support bracket being slidably mounted on the boom element 20. The platform 50 is pivotally mounted on the end of the elbow member 60 which is formed of a pair of parts 62, 64 pivotally connected at a pivot structure 65 along its extent. The elbow member is mounted on the support bracket 70 through a horizontal pivot axis and is designed to be rotated thereon through a suitable motive means indicated at 72 continuously and in either direction about said axis. The support bracket 70 is slidably mounted on the boom through the roller supports indicated at 74 and is extended and retracted along the same through a hydraulic actuator 75 formed of a cylinder part 76 and a shaft part 77 connected respectively to the support bracket 70 and through a flange 78 connected to the boom element 16 with the shaft being pivoted thereon as at 79. The elbow parts 62, 64 which are pivotally connected at the pivot structure 65 are relatively movable since the part 64 is pivoted to move translationally of the extent of the part 62 through a motive means 80 connected between the parts. The motor 80 is also of the linear hydraulic type. Also included on the boom element 20 and suspended therefrom is an auger type digging structure 45 which may be raised or lowered and rotated through suitable motive means (not shown). This mobile aerial tower may vary in shape and parts and the motive means therefore whether employing linear hydraulic actuators or rotary hydraulic actuators are powered from a hydraulic source and controlled through control valves included on the base structure 12 or chassis 11 of the structure with the power lines being directed through the pivot points and along the extent of the boom elements to the respective motors. As will be hereinafter defined, the control valves associated therewith will control the bidirectional movement of the actuators and the speed of response of the same through proportional operation of the control valves to vary the direction and amount or rate of fluid flow thereto.

The control of the hydraulic motors and hence the response of the various elements of the mobile aerial tower is effected by means of a connectionless type control or radio control system employing a portable transmitter 100 which may be carried by the operator to the platform 50 and operated therefrom by the operator or may be operated by an operator from a ground position remote from the mobile aerial tower. The latter controls the energization of a radio type receiver and logic system, indicated generally at 110. These are mounted on the chassis or base frame structure 12 with electrical connections extending therefrom, as will be hereinafter indicated, to the control valves associated with the hydraulic motive system and with the varying working elements, such as the auger and winch, which may be carried on the mobile aerial tower and operated therefrom. In addition, as will be hereinafter commented on, various truck functions, such as stopping and starting of the truck, and increase in speed of the engine thereof to insure a proper motive power supply for the hydraulic system may be employed. Although only a winch and auger are shown as working elements mounted on the tower, other tools and functions may be included thereon and operated from the system.

FIG. 2 shows in perspective the portable transmitter 100 which as heretofore stated may be carried by the operator onto the mobile aerial tower or the support platform 50 thereon or may be operated from the ground or any desired location in proximity with the tower for controlling operation of the same. The transmitter case includes a battery power source 102 together with the logic electronics mounted on control boards and indicated in general at 104 positioned within the transmitter casing. A plurality of control handles, indicated generally at 105, controls the various functions of the boom or motors varying articulation of the same with the transmitter portion of the transmitter control indicated at 108 and included in the housing.

FIG. 3 shows the receiver 110 in its control panel which would be mounted on the chassis of the mobile vehicle either on the base of the tower or enclosed proximity thereto with electrical connections leading therefrom to the control valves of the hydraulic system as will be hereinafter schematically shown. The receiver receives its source of power from a battery power supply, indicated at 115, in the schematic circuit which would normally be an auxiliary electrical power source energized from the generators or alternators of the vehicle or mobile platform. The receiver casing includes the receiver 112 and logic boards or circuits in-

dicated at **114** with a pivoted cover **116** on the receiver casing which opens to expose override controls, indicated generally at **118,** which may be operated by a second operator to override the controls of the transmitter and disable the same for operating the various functions of the mobile aerial tower independent of the transmitter, or for direct operation of the equipment when the radio equipment is not required.

FIG. **4** shows schematically the hydraulic and electrical system for the control system of the mobile aerial tower. Thus, the portable transmitter **100** supplies the signals to the receiver **110** with the electrical power being supplied to the receiver from the battery source **115.** Motive power for this system is provided from the engine of the mobile aerial tower, indicated in block at **120,** which is connected through a mechanical connection **125** to the pump **130** of the hydraulic system. The pump moves fluid from a hydraulic reservoir or tank **135** to an outlet feeder line **140** with a plurality of control lines leading to control valves **161 – 168** which, as will be hereinafter noted, control the functions or motors on the tower. The valves are of the four way type with return passages being indicated at **142** to return lines **145** leading back to the tank or reservoir **135.** Included in the control system is a bypass valve or dump valve **150** which bypasses flow to the outlet feeder line **140** and the control valves through a bypass passage **152** back to the reservoir or tank or blocks the outlet feeder line **140** as the case may be. The output of the receiver and the manual override control **118** is coupled from the receiver through a control cable **155** leading to the control or coil sides of the control valves **161 – 168** to respectively control the same as will be hereinafter noted. FIG. **4** is directed to a closed center type of hydraulic system but it will be recognized that an open center type hydraulic system may be employed in a similar manner.

The transmitter **100** is shown in block form in FIG. **5.** The control handles **105** mounted in the top of the housing of the portable transmitter connect with a series of switches **171 – 178** positioned within the housing. These switches have a plurality of switch positions to either side of a reference or off position and as will be seen in FIG. **7,** switches **171 – 178** have seven switch positions to either side of the reference or off position for controlling not only the direction of the respective actuator with which the switch is associated but also the speed of operation of the same. Thus, as will be indicated by the legends in FIG. **5** on the switches, the boom wil be elevated up and down, rotated and the secondary boom **20** will be extended and retracted through motors which will be energized selectively in opposite directions depending upon the switch position and in varying degrees to control the speed of movement of the respective actuators and hence, the boom elements with motor speed control. Similarly, the spinner or elbow carrying the platform **50** will be extended and retracted along the secondary boom element, rotated clockwise or counterclockwise about its support and tilted translationally along the extent of the elbow or support member **60** with bidirectional control and with varying speeds. Thus, as will be hereinafter noted, the individual switches together with a decoding network and holding registers will convert analogue signals in proportion to switch movement into binary digital code with directional switching to be transmitted by the transmitter. The winch and auger switches **177** and **178** are shown herein as positional switches which also control speed of operation of work performing elements mounted on the boom structure. Similarly, additional switches may be mounted on the transmitter to control additional work functions. Each of the switches are connected in all of their switch positions through a decoder network indicated by the blocks **181 – 188** with the respective switches and the output of the decoder networks are connected to holding registers indicated by the blocks **191 – 198** in the block diagram. The switches **171 – 178** also have a second set of switch contacts which are operated to an on position whenever the control handles are moved from the reference or zero position in either direction to any of the command positions. The operation of the second switch which is evidenced in the block diagram by the conductor **180** will be effective to turn on power to the transmitter and logic network. Thus, the conductors **180** connected in common are connected to a conductor **190** and through a disconnect switch **199** to the transmitter **108** to energize the same. The application of power to the transmitter with the operation of any of the switches is also applied to the logic and control network to energize the decoder networks and holding registers as well as the control components to be hereinafter identified. Thus, movement of any of the switches also connects power through the master clear block to energize the oscillator clock providing the timing pulses for bit counter **202** and the element counter **204.** Any signals in the holding registers **191 – 198** will be directed through the gating blocks **205, 206, 207, 208** and **210** in accord with clock operation and timing signals therefrom together with signals from the counters **202** and **204.** In addition, each message transmission from the transmitter, as will be hereinafter seen in connection with FIG. **10,** includes a sync word and an address word which precede any signals from the command switches. Thus, the sync code as shown in block **211** is directed through a gating block **212** and an address code **213** is directed through an address gating **214** to make up the seven elements or words of the message or transmission which is repeated as long as any of the switches is held down. The sync code or word and address word are also in binary form and, as will be seen and hereinafter described, are comprised of eleven bits in the same manner as each of the command or message words which follow the sync and address words in any transmission of the message. The element counter **204** counts each word in a message and the message is then repeated as long as a command switch is held down. The sync word is used for synchronizing the oscillator clocks in the transmitter and receiver, as will be hereinafter identified, and the address word correlates or properly identifies transmitter-receiver combinations so that only one receiver will respond to the transmitter commands or message operating a single tower should several pieces of similar equipment be in the same location. The address codes and sync codes are fixed with respect to each set of transmitter-receiver equipment in a control system and each transmitter-receiver combination is assigned a separate address code to insure proper correlation in response between transmitters and receivers. The signals transmitted from the holding registers are in binary digital form and each of the bits in a message word, sync word or address word is represented by an on or an off signal. Each of the message words includes a par-

ity bit as the final bit in the eleven bit word which is supplied by the logic block **216** and the gating blocks **205 – 208, 210** and **212, 214** under control of the clock **201** and bit counter **202,** respectively, together with the element counter or word counter **204** apply the digital data to the parallel-to-series converter **220** so that the message words appear in serial bit form to control the transmission of the transmitter **108.** The details of the transmitter are conventional and the transmitter would normally operate in the commercial bands. The digital bits modulate a carrier frequency in the transmission of the message and the transmitter is designed to operate on full separate frequencies which are adjustable by means of a frequency selector, indicated at **230,** so that the transmitter-receiver combinations can be similarly adjusted for operation in certain areas and in proximity with other equipment. The information held in the holding registers **191 – 198** is cleared through operation of the clear control with cessation of operation of any of the switches and at each sequence of transmission.

The receiver block indicated generally at **110** in FIG. **6** includes the basic receiver adapted to receive transmissions from the transmitter **108** and respond thereto. The receiver, which may take varying forms, responds to the modulated frequency transmission to provide digital signals to the detector block, indicated at **240.** As indicated in the transmitter, the receiver has a frequency selector or adjustor knob **235** which adjusts the desired frequency response of the receiver to correlate the same with the transmitter so that the transmitter and receiver are effectively paired for operation in the remote control of a single piece of apparatus. Signals from the receiver are directed through the conductor indicated at **242** to a receiver responsive override switch **245** which in its normally closed position directs response from the receiver to the bypass valve coil **150** whenever transmission is received. Thus, in the hydraulic system, whenever the transmitter is inactive and the receiver is not responding to any signal, the bypass valve is operated to bypass flow of the hydraulic fluid from the pump around the control valves and to the tank. The control valves at the same time are inoperative and hydraulic fluid trapped in the actuators and lines leading thereto will be immovable causing the various components of the mobile aerial tower will remain in a fixed position. With response of the receiver to a signal from the transmitter, the bypass valve is closed shutting down the bypass passage **152** around the pump and back to the tank and directing fluid to the control valves wherein it may be valved by any of the control valves **161 – 168** for the operation of any one of the motors depending upon the commands received from the transmitter. In normal operation, the receiver is always energized from the battery source on the truck chassis and signals received from the receiver will be directed to the clock resync block **250** to initiate operation of the clock **255** such that it will correspond to the clock timing of the transmitter to correlate the timing between the signals transmitted and received. The starting of the clock resync block and the clock is effected by signals received from the receiver which signals are also applied to the serial-to-parallel converter block **260.** With energization of the clock, the bit counter **265** and the element counter **270** are similarly energized to control the conversion of data received from the receiver and to effect gating of the same to the converter elements, to be hereinafter defined, controlling the application of power to the control valves **161 – 168.** The converted data or message from the receiver **260** is directed through coding hubs **272** and into the sync detector **275** and the address detector **280** wherein this portion of the message signal is compared with the settings in the receiver to insure that the proper receiver is responding to the transmitter commands and to insure the data of the transmission is correct and in proper sequence so that the data words which follow in a message can be properly directed to the data gates **281, 282, 283, 284** and **285** and the associated holding registers **291, 292, 293, 294,** and **295.** The command information of the message will then be properly directed to the converter blocks **301 – 308** associated with the respective control vavles **161 – 168** to effect control of the same. The quality and accuracy of the message bits is checked through the parity block **277** and the transmission of enabling signals from the clock and the counters is directed through the block indicated at detecting gates **278** to enable the data gates to receive command signals in the form of message bits and store them in the holding register for application to the converters in the conversion of the message. A master clear control or block **276** receives its initiation from the start of the clock resync unit and effects clearing of the registers and sequencing of the counters so that the bits of information included in the message will be properly timed and transmitted between the logic elements of the receiver to enable proper reception of the message and distribution of the data to the holding registers wherein it will be applied to the coverters operating the valves. Thus, in the operation of the receiver, data received by the receiver block **112** is directed through a detector which starts the clock resync and syncs the operation of the clock **255** with that of the transmitter so that timing of the incoming signals will be coordinated with the logic elements of the receiver for proper reception and transfer of data. The counters **265** and **270** are controlled by the clock and control the detection and transmission of the message words and bits making up the same to both the sync and address detector wherein parity of this portion of the message is checked and if accurate for reception by the receiver permits the introduction of data to the data gates **285** and registers **291 – 295.** The initial transmission or reception of the data is also applied to the bypass valve **150** to open the same and permit operation of the hydraulic system. The individual converters take the data transmission in the message which is in binary digital form and discriminates between the directional portion of the command for proper energization of the valves associated with the converters to provide for a predetermined direction of current flow through the valves for directional operation of the same. In addition, the binary digital data is converted to analogue type data in terms of proportional current flow through the converters to the valve coils for proportional operation of the same in accord with the digital data received.

Both the transmitter and receiver units include many basic logic and control elements which are conventional in form and their details are omitted for simplicity. In the transmitter, however, the analogue to digital converter portion of the command control for one of the control switches is shown in FIG. **7** to indicate the relationship of the multiposition control switch oper-

verters 301 – 308 to operate the valves 161 – 168 in accord with the presence of signals upon the converters. In FIGS. 8 and 9 are shown two forms of the converter circuit, each applicable to sense the directional control signals and provide a directional circuit through the coils of the control valves and to convert the binary digital commands to analogue type commands for the purpose of varying the energization of the coils in accord with the digital signals. The actual valve construction may employ a two coil structure one of which is energized by the converter and the other from the override source or a single coil structure in which the converter circuit is selectively connected and disconnected for override purposes. In the latter construction provision is made for energization of the coil either from the converter or from a remote source in accord with override control. Thus, in FIG. 8, there is shown one embodiment of the control circuit employing a single control valve, it being understood that each of the remaining converters and control valve circuits be identical thereto. The five data gate blocks 281 – 285 and the holding registers 291 – 295 shown in the receiver block diagram of FIG. 6 correspond to the five data words disclosed in FIG. 10 making up the message transmission in digital form. It will be noted from FIG. 10 that the commands to a single boom control valve may come from two data words such that the directional control commands in digital form will be incorporated in a first data word and the speed control commands will be incorporated in a second data word of the transmission both of which will be directed to the converter for operation of the valve. These locations may vary as desired within circuit requirements and the example shown herein is for explanation purposes only. Thus, as indicated in the legends in FIG. 6, the derrick or boom control signals operating the boom control valve 161 in an up and down direction and at varying speeds will receive its command signals from the registers 291 and 292 corresponding to data words 1 and 2 in the example of message transmission shown in FIG. 10 wherein the directional commands are included in the first data word and the speed control commands are included in the second data word. These will be fed to the converter as shown in FIG. 8 to a series of flip-flop blocks 370, 371, 372, 373 and 374, respectively. The blocks 370, 371 represent the directional control commands or up and down while the blocks 372 – 374 respond to the digital control commands and their outputs convert the digital signals to analogue signals through a series of "and" gates hereinafter described. Thus, the blocks 370, 371 are in effect gates and holding registers with the digital response or set signals placed thereon at terminals indicated at 375 and 376, respectively. The opposite terminals 379, 382 will have a reset signal applied thereto so that when one or the other receives an impulse command from the serial-to-parallel converter, one or the other of the flip-flop units 370 or 371 will turn on applying a signal to the conductors 377, 378 leading to a pair of descriminating "and" gates 380, 381. The flip-flop blocks have gating signals from the clock impressed on the common terminals and conductor 368 with clear signals impressed on the terminal 369 to control their functioning. As will be seen in FIG. 8, the opposite terminals of the respective gates have a bias voltage applied thereto through the power source indicated at 383. Thus, signals to one or the other of the "and" gates 380, 381 will energize the respective gate and provide a voltage to the base of a pair of switching transistors 385, 386, respectively, which transistors have their collectors connected in common and to a voltage source 390 and their emitters connected to opposite ends of a control coil 392 which would be the control valve corresponding to the block 161 in the receiver block diagram. The respective emitters are also connected to a pair of conductors 387 and 388 each of which have a series of resistors 395 and 396, respectively connected thereto. In the conductors 387, 388 the series of resistors 395 and 396 therein each have associated therewith a separate switching transistor whose collector is connected to the control conductor 387 or 388 and whose emitter is grounded so that the respective transistors may short out various of the resistors in the series circuit between the directional switching transistors 385 and 386 and a ground connection. Thus, in the circuit of conductor 387, the series of resistors 395 each has a switching transistor 400 – 406 associated therewith respectively which when selectively energized will be effective to bypass or short out all of the remaining resistors in the series circuit by providing a circuit to a ground connection so that current flow from the voltage source 390 through the switching transistors 386 and the coil 392 will have proportionately greater or lesser resistance in series therewith to the ground connection to vary the current flow therethrough to vary the energization of the coil and consequently the opening of the control valve to increase hydraulic flow to the respective motor in this particular direction. Thus as will be seen, the transistor 406 will provide the final or lowest current circuit for the coil 392 being the smallest analogue number and corresponding to command position 1 for the command switch in the transmitter. The switch 400 or transistor will represent the greatest speed command or the 7 position in the analogue to digital converter in the command control providing a bypass of all of the series resistors in the energization circuit of the coil 392 and providing for the greatest current flow through the coil for this direction of movement. Each respective transistor in the line will effectively increase the amount of resistance in the circuit from the transistor 400 and only one transistor in the series circuit will be operative at any one time. The conductor 388 has a similar circuit arrangement of switching transistors 410 – 416 each associated with one of the series resistors 396 in the conductor 388 for the directional energization path of coil 392 through the directional transistor 385 from the power source 390. Thus, selective energization of any one of the transistors will vary the energization of the coil with the current flow therethrough being in the reverse direction from that of the former circuit previously described. The respective transistors 400 – 406 or 410 – 416 are selectively energized from "and" gates which apply a control bias to the base of the respective transistors for operation of the same. These "and" gates are identified generally at 420 – 426 for control of the switching transistors 400 – 406 or 430 – 436 for control of the transistors 410 – 416. Each of these series of "and" gates receive their energization from a further series of "and" gates identified at 440 – 446 which have three input terminals connected in a detector type network and to the outputs of the flip-flop blocks 372 – 374. The latter receive their speed command signals in terms of binary digital commands or set signals to one input terminal, such as is indicated at

ated by the respective control handle for providing directional and speed control commands to the transmitter in digital form such that the signal may be modulated with the carrier frequency and transmitted to the receiver. Thus in FIG. 7, the control switch is shown schematically at 171 as having seven positions to either side of the neutral or off position with the wiper of the switch being identified at 310 which is grounded as at 311. The various stationary switch contacts with the various switch positions to either side of the reference position are connected to a plurality of conductors which are energized from a low voltage source or the battery source as indicated by the conductor 315 through a plurality of resistors indicated generally at 320. All of the stationary switch contacts to one side of a reference position are connected to a set of conductors or buses indicated generally at 325 which are connected in common with the resistors and voltage source and to an "or" gate or coupling unit 330 while the opposite switch contacts or the stationary contacts for the opposite direction of motion are connected through a set of conductors indicated generally at 340 and similarly energized from the voltage source and resistors indicated at 345 with the conductors being connected to a coupling unit or "or" gate 350. The coupling units 330 and 350 represent opposite directional control couplers and the output of the same are fed to a flip-flop unit indicated respectively at 351 and 352. These units form the holding register for the up or down signals or the directional signals from the command switches and the output of the "or" gates or coupling units 330, 350 are respectively connected to the inputs of the flip-flops as indicated by the input connections 353, 354, respectively, with that same input being connected to the opposite flip-flop at the opposite side of the same as indicated by the input conductors 335, 336. Thus, whenever one of the gates or coupling units is energized, it operates to turn on one of the flip-flop units forming the holding register and turn off the other to insure that only one signal will be applied from the holding register or only one of the holding registers will have an output signal thereon. When the wiper contact 310 is in the zero or rest position, both of the coupling units 350 and 330 will be energized and both registers or flip-flops 351, 353 will have signals applied on both terminals of the same insuring that neither will have an output on the same. The analogue signal as indicated by movement of the switch wiper 310 to any one of the stationary switch contact positions to either side of the reference point will also be applied to any one of three additional flip-flops identified at 355, 360 and 365 representing in binary form a 1, 2, or 4 signal from the decoder portion of the input control. The flip-flop 355 has "or" gates or coupling units 356 and 357 associated therewith which are connected respectively to the on 358 and off 359 input terminals of the flip-flop to either turn on or off the flip-flop depending upon whether a binary 1 signal is required for the particular switch position. The conductors indicated generally at 325 and 340 together with their associated power supplies 315 and 345 with the resistors associated therewith are all connected for particular switch positions to the coupling units or "or" gates 356 or 357. Thus, for either side of the reference position, analogue switch positions 1, 3, 5 and 7 as indicated in the drawing are connected to the input of the coupling unit or amplifier 356 to turn on the flip-flop 355 and the switch positions 2, 4 and 6 on either side of the reference point and through the buses 325 and 340 are connected to the input of the coupling unit or amplfier 357 to turn off the flip-flop. Similarly, the flip-flop 360 has coupling units or "or" gates 361 and 362 connected to opposite sides of the same for the purpose of effecting turn on or turn off of the flip-flop 360 identifying a binary 2 signal for conversion or decoding of the analogue switch position to a binary signal. The flip-flop 365 has "or" gates or coupling units 366, 367 connected to opposite sides of the flip-flop for the purpose of effecting turning on or turning off the flip-flop for a binary 4 signal corresponding to the analogue signals of the various switch positions. In each instance, the conductors or buses 325 and 340 are connected to either the on or off coupling units 361, 362 or 366, 367 to effect turn off or turn on of the flip-flops 360, 365 depending upon whether a binary signal of that magnitude is required for correspondence with the analogue switch position of the input control. The network formed by the conductors 325, 340 together with the voltage inputs 315 and 345 for the same and the coupling units 330, 350 and 356, 357, 361, 362 and 366, 367 all form the decoder block 181 in the block diagram of FIG. 5 while the flip-flops 351, 352 and 355, 360 and 365 form the holding register block 191 of FIG. 5 corresponding to the input control or switch 171. Thus, analogue switch position for the wiper 310 of the command switch will operate through the decoder network to provide a directional control in terms of energization of one or the other of the coupling amplifiers 330, 350 and the respective flip-flops 351, 352 to provide a directional signal output. The switch position will also be effective to operate through the bus work network of conductors 325 and 340 and in combination with the coupling units or gates 356, 357, 361, 362, 366 and 367 to convert the analogue position of the switch into a binary digital signal to operate one or more of the flip-flops 355, 360 and 365 to provide a binary signal output in correspondence with the analogue switch position. Such signals, as indicated in the transmitter block diagram, are taken from the holding registers in accord with clock timing and counter output to be gated through the gating blocks and the parallel-to-serial converter wherein they will be transmitted through the transmitter to the receiver. This message or command in digital form which is accompanied by a sync code transmission and an address code transmission, also in digital form and in a predetermined sequence will serve to control the response from the receiver 110. In the receiver logic units the address and sync codes are checked and if proper will permit the introduction of the digital data to the receiver components ultimately leading to the converter components of the same wherein the data will be again transferred from binary to analogue form to control the energization of the respective control coils.

The receiver 110 upon receipt of the message in digital form modulating the carrier frequency signal will, as heretofore noted, initiate operation of the clock to synchronize the response thereto with the signals being received by the receiver and initiate operation of the counters to handle and segregate the bit components of the message words and the message words themselves as they are fed to the data gates and the holding registers. The address and sync code will be checked and if proper will allow transmission of the data to the con-

451, 452 and 453, respectively with the opposite terminals being connected to a reset signal source or the serial-to-parallel converter. When the set terminal of the flip-flop 372 is energized, one output terminal, such as is indicated at 454, has a positive signal thereof while the opposite output terminal 455 has no signal thereon. Then the flip-flop 372 has a reset signal applied to the reset terminal 462 the output signal or voltage is reversed to the opposite terminal so that the terminal 454 will have no voltage signal thereon while the terminal 455 will have a voltage output thereon. The same control arrangement is present on the output terminals 456, 457, respectively for the switching unit 373 and on the output terminals 458, 459 for the switching unit 374 with the flip-flops 373 and 374 having reset terminals 463, 464, respectively. The flip-flops 372, 373, 374 include gating terminals connected to a common conductor 465, and each includes a clear terminal 466 upon which clear signals are impressed to clear the registers. As will be seen in the circuit, the output conductor 454 of switching unit 372 is connected to one input terminal of "and" gates 440, 442, 444 and 446 while the opposite output conductor 455 is connected respectively to an input terminal of the "and" gates 441, 443 and 445. The switching units 373 and 374 have their respective output terminals similarly connected to the various "and" gates in the circuit. With a command signal to any one, two or all of the flip-flop blocks from the converter selective energization of one of the "and" gates will result since all of the input terminals will be energized and the remainder of the "and" gates will be de-energized due to the absence of signals on all three input terminals. Thus, for example, the switching unit 372 when receiving an input digital command 1 will be energized at set terminal 451 to provide a signal at terminal 454 energizing the "and" gate 446 only or the lowest analogue switching transistor 406 or 416 depending upon which of the directional circuits are energized. It will be noted that the outputs of the respective "and" gates 440 – 446 are connected to an input terminal of each of the control transistors or "and" gates 420 – 426 and 430 – 436. The opposite terminal of each of the control or switching "and" gates 420 – 426 or 430 – 436 are connected to control conductors 460 or 461, respectively leading to the output conductors of the flip-flops 370 or 371. Thus, the directional control signal plus the analogue signal from any one of the transistors 440 – 446 will control the selective energization of one of the transistors in the control line 420 – 426 or 430 – 436 in accord with the analogue output from the digital converting transistors 372 – 374 to selectively energize one of the switching transistors 400 – 406 or 410 – 416 to effectively short out all or any portion of the resistors in the control conductors 387 or 388 associated respectively therewith to vary the current flow through the control coil 392 in a direction common to said control conductor and in accord with the switching of the directional transistors 385, 386. Thus, in each of the converter blocks 301 – 308 a converter circuit of this type responds to the signals in the holding registers to provide for directional and speed control commands in digital form and converts the same to an analogue type control signal by shorting out resistance in a resistance series network for an energizing circuit for the control winding 392 in the control valve 161 – 168 associated with the motor to vary hydraulic flow to the respective actuator.

In this analogue converter and associated with the control coil is an override circuit in the form of conductors 470 – 471 connected to opposite ends of the control coil and through a double pole-double throw reversing switch, indicated at 475. One of the movable elements of the reversing switch is connected to the 12 volt power source 476 while the opposite movable element is connected to ground, as at 477, and this switch has a normal centered rest position where the power source is not applied to either of the conductors 470, 471. However, in operation of the switch in one direction or the other, current flow will be directed from the power source 476 through the coil 392 in one direction or the other and to ground to override the control signal applied from the power source 390 and effectively control the direction of operation at maximum speed or energization of the respective control valve independent of the receiver and transmitter signals. A suitable voltage adjusting device may be included with the switch 475 to vary the energization of the coil to vary motor speed, if desired. The override switch 475 is mounted on the receiver and is a part of the override control with each of the converters having associated therewith a similar reversing switch and power source to effectively override any of the respective channels or converters associated with each of the respective motors for the purpose of effecting manual switching control at the receiver location of the respective motors in the articulated scaffolding or mobile aerial tower. Associated with this switching is a 2 position switch, indicated at 500, which in one position corresponding to the off position of the override control provides for a connection of the power source 502 or battery source shown in FIG. 4 to the receiver circuits as evidenced by the conductor 503. This override switch in its second position provides a circuit through the conductor or cabling indicated generally at 505 which will provide the input circuit to the power sources 476 for the override control of each of the respective converters for the respective motors. The opposite side of the switch as indicated by the switch element 510 provides a circuit from a power conductor 511 to ground connection 515 which will provide an energization circuit for the bypass valve to close the bypass passage and open the hydraulic circuit for control of the valves under the manual override function. Thus, should the receiver circuit malfunction and does not properly respond to transmitter commands, the switch 500 will be shifted to the override position energizing the bypass valve, applying power to the override circuits and removing power from the receiver and logic circuit with the individual override controls being effected to direct current flow at a maximum voltage or, if desired, adjusted voltage levels to the respective control coils of the hydraulic actuators for operating the same independent of receiver energization. An example of when such override control would be effective is when the operator would operate his disable control 199 to stop operation of the motors on the mobile aerial tower. Should he at this time be in the platform 50 and in an elevated position, the second operator can effect operation of the motors to bring the personnel carrying platform 50 to the ground by energizing the switching override command switch 500 included in the receiver override commands 118 to remove power from the receiver and energize the override power supplies 476 associated with the respective switches 475 enabling full power to be applied

to any of the motors and at the same time energizing the bypass valve to insure a source of hydraulic fluid to the control valves for operating the motors.

FIG. 9 shows an alternate form of the converter block utilizing a different type of analogue to digital converter circuit and shows the override control applied to a second control coil on the control valve for overriding the operation of the main or receiver operated control coil.

The digital to analogue converter circuit in FIG. 9 shows the control valve as having two control coils **520** and **525**, respectively, operating jointly as the pilot control for operation of the respective control valve for the associated hydraulic motor. The control coil **520** is directionally energized through a pair of switching transistors **530** and **531** whose collectors are connected in common and to a ladder type resistance network with the emitters connected respectively to opposite ends of the control coil. The second control coil **525** is adapted to be energized by the manual override control and for simplicity in numbering, the associated control switch is identified as **475** similar to the embodiment of FIG. **6** with the power source **476** and ground circuit **477** being associated therewith for directional energization of this winding. Associated with this override circuit is the manual power switch **500** which connects the receiver power source **502** to either the circuit **503** leading to the receiving elements or the circuit **505** leading to the power sources **476** for the override control with the circuit **511** connecting the bypass valve to the ground connection **515** to energize the bypass valve and prepare the hydraulic circuit for manual override control. Full energization is applied to the control coil **525** to overcome any energization which might be applied to the control coil **520** for the purpose of overriding the effect of the receiver from the manual override control.

The ladder type resistance network is energized from the power source indicated at **540** and has associated therewith three control switching transistors **541, 542** and **543**, respectively, each of which are effective to connect into the energization circuit for the coil through one or the other of the switching transistors **530, 531** a plurality of parallel and series resistance elements. These resistance elements provide varying parallel and series resistance circuit combinations and effect an overall analogue conversion from the digital control commands into the bases of the switching transistors **541 – 543** in parallel circuit with the power source to varying the energization of the coil **520.** The ladder type resistance network includes resistors **545** and **546** connected in series circuit with the emitter of switching transistor **541** and a ground connection **547** with the midpoint or common point of the resistors **545** and **546** being connected to a resistor **548** leading to another branch of the ladder type network formed by resistor **549** connected to the emitter of the transistor **542** and the opposite extremity of the resistor **548.** This common connection is connected to the resistor **550** leading to the common conductor **551** which is common to the collector electrodes of the switching transistors **530** and **531** for the directional control or circuit through the control valve **520.** The transistor **543** has its emitter connected through another resistor element **552** in the ladder type network with its opposite extremity connected to the free extremity of the resistor **550** and the conductor leading to the common connection **551** for the switching transistors **530** and **531.** The switching transistors **541 – 543** represent switching respectively for the 1, 2 and 4 binary digits in the conversion of the binary command signal to an analogue type signal in the form of a variable resistance network which from the power source will determine a stepped current flow through the switching transistors to variably energize the control coil **520** of the control valve. Each of the transistors **541 – 543** has a bias applied to the base of the same from a power source **555** leading through a bias resistor **556** to the base of the switching transistor, all of the bias circuits being connected to the power source **555** in a parallel type connection. In addition, each of the switching transistors have an input circuit in the form of a conductor **557, 558** and **559,** respectively, connected to the base of the respective switching transistors with a diode **560** being connected between each of the respective emitters and the bases of the switching transistors. The input conductors **557 – 559** each lead respectively to flip-flop elements identified generally at **561, 562,** and **563** for the respective switching transistors **541 – 543,** the flip-flop circuits being formed of nor units connected in a conventional flip-flop configuration. As shown in the circuit diagram, each of the flip-flop circuits receives its input from a pair of "and" gates or coupling units one of which has a command or set signal thereon and the other a reset signal thereon. Thus, the flip-flop circuit **561** is energized from "and" gates **570, 571** with the gate **570** having the command or set input signal from the serial-to-parallel converter or register impressed on the input conductor **573.** The input conductor to the gate or "and" unit **571** has a reset signal impressed on its input conductor **574.** The remaining input conductors for the "and" gates **570, 571** are connected in common and through a conductor **575** and to a suitable gating source to provide for operation of the device. The output of the gate **570** is fed to the input of the flip-flop through a conductor **576** to set the register whenever a binary **1** digital command is received from the serial converter and the output of the gate **571** is connected to the opposite side of the flip-flop for clearing the same and providing an internal circuit with a ground connection. The flip-flop acts as a register for holding the signal on the output circuit **557** until a reset signal is received. An additional input conductor **577** is applied to the other side of the flip-flop circuit as a master clear input source for resetting the register under special conditions. The internal ground connection within the flip-flop **561** whenever it is reset provides a circuit through the conductor **557** and diode **560** to one end of the resistor **545** to provide a parallel branch path through resistor **545** from the energizing source **540,** assuming one or the other of the transistors **542** or **543** is energized and connecting the source to the ladder type network. Each of the remaining flip-flops has a similar input and internal circuit configuration with the flip-flop circuit **562** being fed from "and" gates **580, 581** and the flip-flop **563** being fed from gates **590** and **591.** The input circuits to the "and" gates **580** and **590** are through the input command or set conductors **583** and **593,** respectively, with reset signals being applied to the opposite "and" gates **581, 591** through input conductors **584** and **594,** respectively. The flip-flop circuits **562, 563** include additional input conductors similar to clear conductor **577** for clearing the register formed by the flip-flop units. The

outputs of the "and" gates **580, 581** and **590, 591** are connected into the flip-flop circuit **562, 563** in the same manner as that of the flip-flop unit **561.** Thus, binary digital signals of the **1, 2** or **4** magnitude will be applied to the controlling "and" gates **570, 580** or **590** in any combination to provide an output which will effect switching of the transistors **541, 542** and **543.** With the conduction of any one of the transistors **541 – 543** or any combination thereof, a different network circuit is provided with different resistance combinations in series and parallel circuits some of which are connected directly to ground to provide for a graduated reduction in total overall resistance between the power source **540** and the common connection or collector electrodes for the switching transistors **530, 531.** This selective connection of the various elements of the resistor network in series or series parallel circuit configuration with the power source provides the stepped analogue signal in the form of a variable current through the respective directional switching transistors **530, 531** to the coil **520.** An an example, energization of the "and" gate **570** and switching of the flip-flop circuit **561** to provide an output therefrom to the base of the switching transistor **541** will effectively connect into the energizing circuit for the coil **520** the resistors **546, 549, 552** in the parallel configuration and the resistors **545, 548** and **550** in a series relationship to provide the largest reflected impedance in the energizing circuit for the coil through one or the other of the switching transistors depending upon the directional energization signals received from the transmitter.

The directional switching transistors **530, 531** are respectively connected through flip-flop circuits indicated generally at **600** and **601** with output conductors **602** and **603,** respectively, leading to the bases of the transistors **530, 531.** These bases are also energized from a voltage source indicated at **605** and through a bias resistor **606** to provide a bias signal thereon. Control of the respective flip-flop circuits **600, 601,** as in the case of the binary digit switching, is effected from a pair of "and" gates for each flip-flop circuit. Thus, the flip-flop circuit **600** receives its input from "and" gates **610, 611,** respectively, while the flip-flop circuits **601** receives its input energization from "and" gates **620, 621,** respectively. "And" gates **610** and **620** have one side or set input conductors **613** and **623,** respectively, connected to receive the digital command signals from the directional control while the opposite "and" gates **611** and **621** have their reset input side conductors **614** and **624,** respectively, connected to a reset signal source. The opposite side of each of the "and" gates are connected in common through a conductor **625** to a gating signal source to enable operation of the "and" gates on the presence of a signal thereon. The outputs from the respective "and" gates **610** and **620** are fed to the input side of the flip-flop circuits **600** and **601** through conductors **616** and **626,** respectively, and the opposite side of each of the flip-flop circuits are fed from the gates **611, 621** through output conductors **617, 627** for the purpose of resetting the flip-flop circuits with the presence of the reset signal on either of the inputs **614** and **624.** The flip-flop circuits include in addition the clear input conductors **618** and **628** for clearing the flip-flop circuits which act as a register to hold the directional signals applied to the base as long as there is a signal present on the receiver indicating such a command. The energizing circuit for the coil **520** is completed through conductors **630** and **631** leading through diodes **632** and **633,** respectively, and amplifier units **634, 636** which effectively ground the energization circuit under conditions of an output from the flip-flop with which they are associated. Thus, the amplifier **634** is connected to the opposite side of the flip-flop circuit as at **637** to be controlled by the outputt therefrom while the amplifier **636** is connected to the opposite side of the flip-flop **601** at a conductor **638** to be similarly controlled. In each instance, the internal amplifier circuits of amplifiers **634, 636** effect a collector to ground circuit connection whenever the main side of the flip-flop is fired or conducting placing a signal on the base of the respective switching transistors. Thus, directional flow through the coil **520** under operation of the switching transistor **530** will be effected from the emitter of this transistor through the coil **520** and back through conductors **631,** diode **632** and through the amplifier or coupling unit **634** to ground whenever the flip-flop **600** is fired applying a control signal to the base of the switching transistor **530.** The output or the other side of the flip-flop **600** through the conductor **637** will condition the grounding circuit. Similarly, switching of the transistor **531** will be effected through the operation of a flip-flop **601** providing a directional circuit from the emitter of the transistor **531** through the coil **520** in the opposite direction and through the conductors **630** to the diode **633** to the coupling unit **636** connecting the circuit to ground. This coupling unit will be conditioned by the output from the opposite side of the flip-flop circuit **601** through the conductor **638** to the coupling unit.

Thus, in the ladder type converter circuit of FIG. **9,** directional signals will be introduced to the "and" gate **610** and **620** to effect switching of the switching transistors **630** or **631** depending upon the nature of the command. This will set up a directional circuit through the coil **520** and the binary digital signals applied to the converter through the "and" gates **570, 580** or **590** or in any combination thereof will effect varying series and resistance parallel configurations of the resistance elements forming the ladder type resistance network to vary the total impedance between the power source **540** and the collector of the switching transistor being energized. The switching will be effected by the switching transistors **541 – 543** in accord with the input signals on the respective input "and" gates **570, 580** or **590.** The flip-flop circuits **561 – 563** form holding registers which will be reset upon cessation of the command signals and the presence of a reset signal to the opposite "and" gate. Thus, proportional current flow through the coil **520** will effect the opening of the valve in the hydraulic circuit to vary the amount of fluid flow to the associated hydraulic motor altering the speed of response thereof. The direction of current flow through the coil will adjust the four way type control valve to vary the directional control of fluid to the actuator for directional control of the motor and movement of the associated elements of the articulated platform associated therewith.

In FIG. **10** is shown the message diagram which is transmitted by the transmitter upon movement of any of the control handles **105** in the transmitter. The output signal which is initiated by control movement to energize the logic network of the transmitter and the transmitter itself will be proceeded by a sync code signal and an address signal to insure accuracy in the

transmission and reception of the message data and to insure that the proper receiver and machine connected thereto will respond to the transmitter commands. In the example shown herein, the data transmission is formed of five message words in addition to the sync and address word and each of the words include 11 bits of information in the form of an on or an off signal. In the message words the command data in the form of directional signals and digital data for speed control signals is transmitted with the various command bits being placed in the data words portion of the transmission. The exact orientation of the informational commands in the data words may be altered and the number of data words in the transmission may be changed without departing from the scope of the present invention. Thus, as will be seen in the example in FIG. **10**, directional commands for the components of the boom are included in the first data word while the speed commands corresponding thereto are included in the second data word. Directional commands for the elbow or structure supporting the platform and its 3° of movement are included in the third data word while speed commands for the same signals are included in the fourth data word. The fifth data word includes direction and speed commands for the work performing elements carried by the platform or scaffold. In the example included therein, additional command information for components not shown in the block diagrams are included as an example of additional instructions and structure which may be incorporated into the transmitter-receiver combination and the hydraulic system associated therewith. It will be noted inn the example given that provision is made in certain of the data words for additional commands which effect stopping and starting of truck engine or, throttle movement and for directional control and operational control of a pole claw. Where such elements or control structures are not included in the overall system, these portions of the data words are left blank and no response will be received therefrom. The last bit in each data word is a parity signal designed to check the quality of the transmission of the message word.

In the operation of the improved control system, the portable transmitter **100** will be taken by the operator and operated from any position in proximity to the mobile aerial scaffolding having an associated receiver mounted thereon. The transmitter is portable and the operator may carry the same into the personnel carrying bucket or platform of the tower or may operate the same from a ground location in proximity with the tower and in visual contact with the same to enable movement of the components of the tower in accord with various working functions. The transmitter is self-contained having its own power supply and includes a plurality of control handles which may be operated in any sequence and in any number simultaneously within the ability of the operator to move the various elements of the platform in accord with displacement of the handles. Movement of any one of the handles initiates energization of the transmitter and the logic circuits included therein and handle movement in predetermined directions from a reference position and in varying degrees from the reference position will establish directional and speed control commands which are converted from analogue to digital form and transmitted from the transmitter to the receiver wherein the commands will be decoded and utilized in the operation of the control valves in the hydraulic system operating the motors of the platform. Command data is transmitted from the transmitter **100** in binary digital form along with a sync and address code identifying the particular receiver to respond thereto and to insure quality of transmission. As long as the control handle is held depressed, the message transmitted will be repeated and the actuator controlled by the receiver will continue operation. The system involved is an open loop type system and hence, it requires visual observation by the operator to know or see the movement of the elements of the mobile platform to the desired location so that the operator may terminate the command by movement of the control handles at the transmitter to stop further movement. In the improved hydraulic system, a bypass valve is employed to bypass flow or block flow to the control valves energizing the motors whenever no command is transmitted thereby locking the motors in whatever position they happen to be in until further movement is commanded by operation of the transmitter. With energization of the transmitter, the bypass valve is opened to permit flow of hydraulic motive fluid to the control valves for effecting movement of the actuators. The transmission of data from the transmitter is in serial form and the message words are designed to accommodate any and all commands capable of operation of the tower and its equipment. Space for all such commands is included in each message which is repeated with continuous operation of any control handle on the transmitter. Thus, message length is fixed and the reception of the data at the receiver initiates a clock timing to check and determine the accuracy of the sync code and address code and to detect and convert the message requests in the entire message requiring operation of the control valve included in the system.

This system includes a manual override at the receiver which enables a second operator to override the control of the transmitter-receiver system on the hydraulic control in the event the same becomes disabled or to operate the system as an initial operator. The override control of the receiver bypasses the digital to analogue control in the receiver and effects direct energization of the motor either through the same coil on the control valve or through a second coil on the control valve to override or replace the signals applied from the converter and effect operation of the valve and hence the motor under direct manual control from the receiver. The system employs varying message patterns and include any desired number of data commands commensurate with the control operators on the platform and any working elements associated therewith to effect automatic control from a remote location and from a portable transmitter through a connectionless type connection.

In considering this invention it should be remembered that the present disclosure is illustrative only and the scope of the invention should be determined by the appended claims.

What is claimed is:

1, A mobile aerial tower comprising, a mobile platform, an articulated boom mounted on the platform, hydraulic motors connected to parts of said boom for orienting the same in at least two axes of movement, a hydraulic pressure source for operating said hydraulic motors carred by the mobile platform and connected respectively to each of said hydraulic motors, control

valve means positioned in the connection between the source and each of said motors for reversibly operating said hydraulic motors bidirectionally and with varying speeds of movement, said control valve means having control coils means therein, a radio transmitting controller means including a radiating transmitter for operating said motors from said mobile platform with a connectionless type of coupling including a plurality of switches each adapted to selectively control one of said hydraulic motors with the switches having a plurality of switch positions to either side of a reference position for directional and variable speed control of said motors, encoder means included in said transmitting controller means to translate switch position into a pulsed binary code signal, means including clock means for gating said signals to said radiating transmitter and antenna in a predetermined sequence, said transmitting controller means including means to energize said transmitter with operation of any of said switches from said reference position, and receiver means carried by said platform and including demodulator means and clock means responsive to the signals from said transmitter to detect the pulsed code signals and to convert the pulsed code signals into current flow in said control coil means of said control valves in a direction and magnitude corresponding to respective switch position in the transmitting controller means to provide operation of the motors in accord with the switch position.

2. The mobile aerial tower of claim **1** and including an additional boom element having a personnel carrying basket at the extremity of the same connected to the boom, and additional hydraulic motor for orienting said additional boom element and the basket thereon with respect to the articulated boom about at least one axis of movement.

3. The mobile aerial tower of claim **2** and including manual override means for each of said motors positioned on said platform and selectively connected to said control coil means of said control valve for said respective hydraulic motors to energize said control coil means and operate said motors independent of the trans-mitter.

4. The mobile aerial tower of claim **2** and including bypass valve means positioned in the connection between the hydraulic source and the hydraulic motors of the articulated boom and boom element and adapted to bypass flow of hydraulic fluid from the source to said motors, said bypass valve means being operative with operation of said receiver means to connect the source of hydraulic fluid to said motors to be controlled by the associated valve means.

5. The mobile aerial tower of claim **4** and including additional means in the manual override means of the receiver for operating the bypass valve to connect the source of hydraulic fluid to said motor independent of the receiver with operation of the manual override means.

6. The mobile aerial tower of claim **1** in which the transmitter includes with the means to energize the transmitter means upon operation of any of said switches, additional means to transmit an address code in sequence with the pulsed code signals to the receiver means, and means in the receiver demodulator means responsive to the address code to permit demodulation of the pulsed code signals upon receipt of a proper address code.

7. The mobile aerial tower of claims **6** and including means in the transmitter means to provide a sync signal with operation of any of said switches in sequence with the address code and pulsed code signals, means in the receiver means responsive to the sync signal and conditioning the demodulating means to respond to the address signal and the pulsed code signals with a proper synchronization of signals from the transmitter means.

8. The mobile aerial tower of claim **7** in which the transmitter means and receiver means include holding registers for the sync, address and pulsed code signals, and including additional means responsive to the absence of operation of any of the switches to clear the registers of the signals therein.

9. The mobile aerial tower of claim **8** in which the transmitter means and receiver means include oscillator type clock means and binary counters which synchronize the demodulated signals in the transmitter and receiver means in proper sequence to convert the signals and provide the current flow to the control coil means of the valves.

10. The mobile aerial tower of claim **9** in which the transmitter means and receiver means include respectively adjustable means for transmitting and receiving signals on any one of a selected plurality of frequencies.

11. The mobile aerial tower of claim **10** in which the receiver means on the platform includes a converter responsive to the pulsed code signals and including a resistance network with switching means for selectively connecting portions of the network with the energizing coil means of the control valve means and to a fixed electric source to variably energize the coil means in predetermined directions and with a variable current to selectively control the direction and speed of rotation of the motor means.

12. The mobile aerial tower of claim **1** in which the control coil means in a single control coil for each valve.

13. The mobile aerial tower of claim **1** in which the control coil means is a pair of coils for each control valve means with one of said coils being connected to the receiver means and the other of said coils being connected to the manual override means.

14. A mobile structure comprising, a mobile platform, a structure mounted on the platform and including a plurality of parts each movable relative to one another in directions transverse to one another, a plurality of hydraulic motors connected to the parts of the structure for orienting the same about said respective axes of movement, hydraulic pressure source carried by said platform for operating the respective hydraulic motors, hydraulic connection means extending between the hydraulic source and the respective hydraulic motors, control valve means positioned in the hydraulic connection means between the hydraulic source and said motors for reversibly operating said hydraulic motors with varying speeds of movement, the control valve means having control coil means thereon for operating the control valve means, a portable radio transmitter and controller for operating said motors from a point remote from the mobile platform through controllable energization of said control coil means of the control valve means, said radio transmitting controller including a plurality of switches each adapted to selectively control one of said motors, an analogue to digital converter operated by said switches to translate switch position into binary pulsed code signals, means

including clock means for gating said signals to the radiating transmitter in a predetermined sequence, receiver means carried by the platform and including demodulator means and clock means responsive to the signals from the transmitter to detect the pulsed code signals, and converter means having switching means and a resistance network included with the receiver means and responsive to the demodulator means for converting the pulsed code signals into analogue type signals and operating said switching means and said resistance network to provide a variable current flow to the control coil means of the control valves in a direction and magnitude corresponding to the switch position in the transmitting controller.

15. The articulated structure of claim **14** and including manual override means positioned in said receiver means and connected to the control coil means of each of the control valve means for the respective hydraulic motors to energize the control coil means and the bypass valve means independent of operation of the receiver.

16. The articulated structure of claim **14** in which the transmitter includes circuit means and a portable battery source included therewith upon operation of any of the switch means.

17. The articulated structure of claim **16** in which the transmitter includes additional means for generating an address code and a sync code in the form of pulsed code signals with operation of any of the switches turning on the transmitter and in which the receiver means includes in the demodulator means means responsive to the sync code and address code to condition response for the demodulator means to demodulate the remainder of the pulsed signals.

18. The articulated structure of claim **17** in which the transmission by the transmitter with operation of any of the switches provides a series of pulsed code signals in a predetermined spacing and timing to provide a message of a predetermined time length which is repeated with continued operation of any of the switches and in which the message is of the same time length irrespective of the number of switches operated.

19. The articulated structure of claim **18** in which the transmitter includes converter means for translating a switch position upon operation thereof to pulsed coded binary signals and in which the receiver means includes the demodulator and converter which converts the pulsed code binary signals to analogue type signals through operation of the switching means in a resistance network to provide for variable magnitude and direction of current flow through the control valves of the hydraulic motor.

20. The mobile articulated structure of claim **15** and including bypass valve means positioned in the connection between the hydraulic source and respective hydraulic motors of the structure to bypass flow of hydraulic fluid from the source to said motors and seal the hydraulic lines such as to maintain the motors in their last operating condition, and means responsive to presence of signals in the receiver means to operate said bypass valve means to connect the hydraulic fluid source to said motors through said control valve means.

* * * * *

UNITED STATES PATENT OFFICE
CERTIFICATE OF CORRECTION

Patent No. 3,774,217 Dated November 20, 1973

Inventor(s) Robert B. Bonner et al.

It is certified that error appears in the above-identified patent and that said Letters Patent are hereby corrected as shown below:

Column 8, line 33, delete "coverters" and insert -- converters --.

Column 8, line 43, delete "detector" and insert -- detectors --.

Column 9, line 45, delete "353" and insert -- 352 --.

Column 21, line 43, delete "trans-mitter" and insert -- transmitter --.

Signed and sealed this 25th day of June 1974.

(SEAL)
Attest:

EDWARD M.FLETCHER,JR.
Attesting Officer

C. MARSHALL DANN
Commissioner of Patents

USCOMM-DC 60376-P69
* U.S. GOVERNMENT PRINTING OFFICE : 1969 O—366-334.