W. H. C. HIGGINS, Jr.

PROCESS OF MIXING FUEL FOR CARBURETERS.

APPLICATION FILED JULY 9, 1910.

1,077,881. **Patented Nov. 4, 1913.**

Fig. 1.

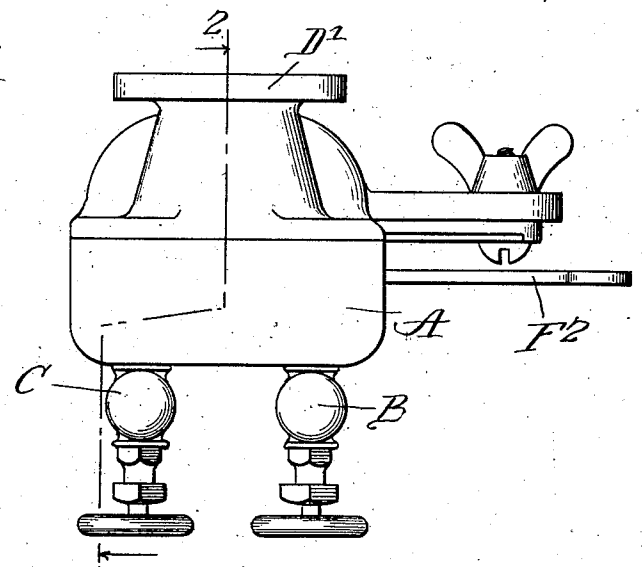

Fig. 2.

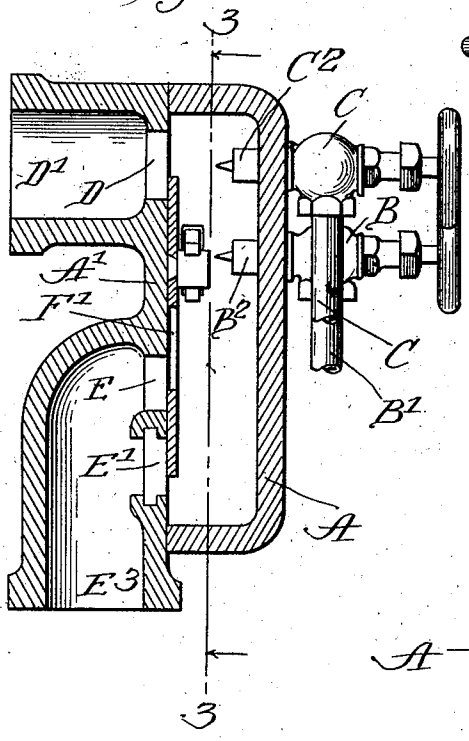

Fig. 3.

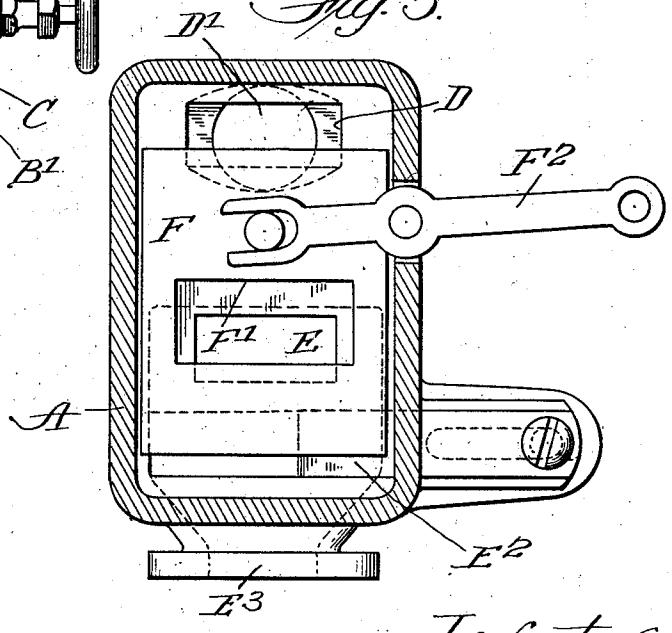

Witnesses:
P. J. Gathmann
Lucy A. Falkenberg.

Inventor:
William H. C. Higgins, Jr.
By Parker & Burton
Attorneys:

UNITED STATES PATENT OFFICE.

WILLIAM H. C. HIGGINS, JR., OF LAPORTE, INDIANA.

PROCESS OF MIXING FUEL FOR CARBURETERS.

1,077,881. Specification of Letters Patent. Patented Nov. 4, 1913.

Application filed July 9, 1910. Serial No. 571,168.

To all whom it may concern:

Be it known that I, WILLIAM H. C. HIGGINS, Jr., a citizen of the United States, residing at Laporte, in the county of Laporte and State of Indiana, have invented a certain new and useful Improvement in Processes of Mixing Fuel for Carbureters, of which the following is a specification.

My invention relates to a process of mixing fuel for carbureters.

The accompanying drawing illustrates an apparatus suitable for carrying out the process, wherein—

Figure 1 is a top view of the carbureter; Fig. 2, a section along the line 2—2 of Fig. 1; Fig. 3, a section along the line 3—3 of Fig. 2.

Like parts are indicated by the same letter in all the figures.

A is a shell which with the wall A^1 forms the mixing chamber A^2.

B is a hydrocarbon or fuel valve supplied from the pipe B^1 and provided with the nozzle B^2 which discharges into the mixing chamber.

C is a similar liquid or water valve provided with the supply pipe C^1 and with the nozzle C^2 which discharges into the mixing chamber.

D is a mixture discharge port and D^1 the connection which leads thence to the engine.

E, E^1 are air supply ports, one of them controlled by the shutter E^2 and opening both into the air passageway E^3.

F is a slide valve having an aperture F^1 therein adapted to control as indicated the mixture discharge port and the air supply port and operated in any desired manner, or by any desired motive power by means of the lever F^2 which passes out through the case.

I have spoken of hydrocarbon and water valves but the essential point is that I connect to the mixer a hydrocarbon and a water supply pipe. The valve is only for the purpose of adjusting the size of the aperture but in each case the oil or water is drawn from the supply pipe by the vacuum in the mixing chamber. It is that vacuum which causes the fluid to flow and by varying the vacuum the flow of fluid is varied. This variation in the vacuum results, of course, from the operation of the engine. When the engine is at high speed and high load the slide valve F will be in its lower position and the intake of the mixture discharge port into the engine will be wide open to take in a large quantity of mixture and the vacuum in the engine will be relatively low owing to the ease with which the mixture is drawn through the wide-open mixture discharge port. At the same time the slide valve being in its lower position the air inlet will have been increased in area, but more slowly than the mixture discharge port, with the result that the vacuum in the carbureter will be increased because of the relative freedom of the mixture discharge and the relative retardation of air inlet. The supply of oil or water is such as to cause the respective feeds to vary unequally and preferably so that while the oil begins to feed at low load, the water will not begin to feed until some time thereafter, and so that when the water does begin to feed its feed will increase more rapidly than that of the oil until at high load their amounts will be in many instances approximately equal. The arrangement of parts must therefore be such as to bring about this result. In other words any suitable means for controlling the liquid supply pipes may be used, though in the particular form of the device, as I use it, and as it is here illustrated, needle valves are employed. Of course, it will be understood that this variation can be obtained in various ways, as for example by having the distance through which the water must be lifted greater than that through which the oil must be lifted or by having the oil opening larger than the water opening or by having the oil opening at a slightly different position in the chamber from the water opening or where there will be an effective difference in the action of the vacuum at their respective openings or by combining any or all of these or other means for bringing about the result which is important in my process.

The devices, whatever they are, whether needle valves or any other mechanism, should be adjusted so that the oil or fuel will flow with any degree of vacuum and so that the water will only begin to flow at a relatively high vacuum. In other words, the two valves do not respond equally to the same vacuum. As the vacuum increases after the water begins to flow the increase in

flow of water is more rapid than the increase in flow of fuel responsive to the increasing vacuum.

In the actual practice of my process in a given instance I have arranged the parts so that such a vacuum as I have described will be formed in the mixing chamber and the oil and water openings enter the mixing chamber at the same level. The level of the oil is higher than the level of the water with respect to the level at which their passages open into the mixing chamber. Usually also the water opening is smaller than the oil opening. And in the case to which I have referred there is practically no feed of water up to half-load and thereafter it increases so rapidly that there is approximate equality of oil and water fed at the high load.

It will be evident that, although I have shown in my drawing an operative device, many changes might be made both in size, shape and arrangement of parts without departing materially from the spirit of my invention, and wish therefore that these drawings be regarded as in a sense, diagrammatic.

The use and operation of my invention are as follows: As the engine operates it draws its charge from and through the carbureter, and because of the relation of the mixture discharge and air intake ports, a vacuum is set up in the carbureting chamber. This vacuum is varied by means of the sliding valve which controls both intake and mixture discharge openings and may be adjusted by means of the adjustable shutter which controls a portion of the air intake opening. The sliding valve being controlled by the engine governor or other means, therefore, causes a suitable vacuum in the carbureting chamber, which vacuum draws from the needle valve, the requisite amount of hydrocarbon and as this vacuum varies different amounts of the hydrocarbon are drawn out. The same action takes place with regard to the water valve except that this valve is adjusted so that a higher vacuum must be had in the carbureting chamber before the water commences to flow. When once the water commences to flow, however, and the vacuum continues to increase, greater proportional amounts of water are drawn out in view of the fact that any increase in vacuum produces a corresponding increase in the flow from each valve but since the water flow starts later than the hydrocarbon flow the proportionate increase is greater. This is what actually occurs in actual practice as hereinbefore set out. The shutter and slide valve are so adjusted that for an increasing load an increasing vacuum is had. Therefore, the maximum amount of water and the maximum amount of hydrocarbon are both discharged for a maximum load, and the hydrocarbon and water discharges both increase from no load up to maximum load and the relation between the slide valve and the openings is such that the correct proportion of hydrocarbon and water is at all times drawn in, it being remembered that below half-load it is undesirable to have any water in the mixture. This is because at low loads the compression in the engine is lower and therefore a richer mixture is needed in order to have satisfactory combustion. A mixture diluted with water would be cooled to such a point that combustion either would not take place or would be imperfect. When the conditions have returned to the point at which no further water is required, or say, at some point below half-load, those conditions will have been reached where, on account of the small size of the water opening or otherwise the vacuum will be insufficient to draw the water therefrom while in this case the oil opening being larger the vacuum will be sufficient to draw the oil from it. The shutter which controls part of the air intake is fixed once and for all when the carbureter is first adjusted for the engine, and requires no further change, this adjustment being made by experiment in the case of each particular engine. Obviously all of these adjustments or variations in the supply of materials could be carried on by hand. The slide valves could be from time to time adjusted so as to bring about the desired vacuum and the oil and water feed valves or supplies could be in like manner operated by hand so as to produce the desired results. Water also acts to regulate the distribution of pressure during the working stroke. At the moment of explosion, the water is fully vaporized, transformed into super-heated steam, and then gives off the heat of the super-heating during the latter portion of the stroke, thus maintaining the temperatures and pressures higher at the end of the stroke than they would otherwise be. In addition to this action, when the temperature becomes sufficiently high, the super-heated steam, or at least a part of it, is dissociated into H H O. This monatomic oxygen then combines with the free carbon, and the hydrogen which remains combines with the diatomic oxygen of the atmosphere, thus giving a much more complete combustion and producing a scouring effect in the cylinder, in addition to liberating, at the latter portion of the stroke, large quantities of heat, which helps to keep up the mean effective pressure. It is important, however, that the water be not introduced at the lower working ranges because the temperatures are so low that the water operates to prevent combustion and to decrease the efficiency of the engine. For this reason the means which I have provided for introducing the water and for correlating the time at which water and hydrocarbon enter the carbureting chamber are of the

utmost importance especially in view of the fact that when once adjusted no further adjustment is required and the device will be operative for an indefinite length of time without change.

For convenience I have shown a form of structure in which my process of mixing fuel for carbureters can be carried on but, of course, it is obvious that any one of the infinite variety of devices could be more or less effectually used to carry out the process.

It will be understood, of course, that my invention is applicable to the use of any kind of hydrocarbon fuel such as oil, gasolene, alcohol and other similar fluids.

The term "mixing chamber" I use in its general significance. It is, of course, conceivable that some portion of the engine itself might serve as such mixing chamber. I employ the term "charge" to indicate what is supplied to the engine as a matter of convenience of expression. The meaning of the term "unequally varying" as applied to the substances of which the charge is made is evident from the foregoing for the quantity of water varies but unequally with the variations of the quantity of hydrocarbon. The method of supplying the substances by means of the variations in the vacuum of a mixing chamber is, as I now view it, the preferred method but, of course, these substances or some or all of them, could be supplied or fed to the mixing chamber or engine by other means than or by means additional to such variation of the vacuum.

I have shown an apparatus, but as above suggested it is to be understood for the purposes of this invention, as merely diagrammatic or suggestive for the process is capable of being carried out in various ways and by hand.

One part of my invention therefore relates to the introduction of fuel and water by any sort of an apparatus to the carbureter, but in such manner as to vary their feeds with respect to one another, that is for example, so that the oil begins to feed first, or increases its feed more slowly than the feed of the water.

Another part of my invention relates to the feeding of fuel and water in the manner above suggested or otherwise, in response to a vacuum such as I have described and illustrated.

The operation of the vacuum in the carbureting chamber depends both upon the suction conditions, that is to say, the pressure condition in the engine cylinder, and also upon the relative openings of intake and discharge ports. Assuming that the intake and discharge ports are fixed for a time and the vacuum in the cylinder increases or decreases, the vacuum in the carbureting chamber will also increase or decrease in unison with the increase or decrease in the engine, and, assuming that the vacuum in the cylinder remains constant and the slide valve is manipulated to vary the relative intake and discharge openings, then again the vacuum in the carbureting chamber will vary with reference to the vacuum in the cylinder, and when in operation these two conditions prevail it is clear that it cannot be said under those circumstances that the variation in the vacuum chamber responds directly to the varying conditions in the engine cylinder, the vacuum in the chamber being constantly controlled both by the conditions in the engine cylinder and the varying relations between the air inlets and the mixture outlet.

The variation in flow as between the water and the oil may be brought about either by the manipulation of the valves or by the difference in the head of their respective liquids, it being assumed that the reservoir level of the two liquids is the same, or by the difference in the pressure of the fluids back of their respective valves, one valve being vertical above the other as shown, or by varying the character or consistency of the fuel.

The port E^1 as shown in the drawing is similar in shape to port E but larger. When the shutter E^2 is moved it will, of course, vary the effective area of the opening of the port E^1, and when the slide F is moved in a given direction the port E will be gradually closed or gradually opened. If the ports E and E^1 are of exactly the same size, then the difference between them would be due to the position of the shutter, but they might be of different sizes.

I claim:

1. The process of producing for gas engines, a charge varying in character from low load to high load which consists in supplying air, liquid fuel and water in unequally varying quantities to a mixing chamber responsive to the variations in the vacuum therein, such vacuum itself responsive to the varying conditions of the engine cylinder with which such vacuum chamber is connected, and thence discharging the same to the engine, the supply of water beginning later in the cycle of operation from low load to high load and increasing after it does begin more rapidly than the feed of liquid fuel.

2. The process of producing for gas engines, a charge varying in character from low load to high load which consists in supplying air, liquid fuel and water in unequally varying quantities to a mixing chamber responsive to the variations in the vacuum therein, such vacuum itself responsive to the varying conditions of the engine cylinder with which such vacuum chamber is connected, and thence discharging the same to the engine, the supply of

water beginning later in the cycle of operation from low load to high load and increasing after it does begin more rapidly than the feed of liquid fuel, until at high load they are approximately equal.

3. The process of producing for gas engines, a charge varying in character from low load to high load, which consists in supplying air, liquid fuel and water in unequally varying quantities to a vacuum mixing chamber responsive to the variations in the vacuum therein, such vacuum itself responsive but not directly to the varying conditions of the engine cylinder with which such vacuum chamber is connected, and thence discharging the same to the engine, the supply of water beginning later in the cycle of operation from low load to high load, and increasing after it does begin more rapidly than the feed of liquid fuel.

4. The process of producing for gas engines, a charge varying in character from low load to high load, which consists in supplying air, liquid fuel and water in unequally varying quantities to a vacuum mixing chamber responsive to the variations in the vacuum therein, such vacuum itself responsive but not directly to the varying conditions of the engine cylinder with which such vacuum chamber is connected, and thence discharging the same to the engine, the supply of water beginning later in the cycle of operation from low load to high load, and increasing after it does begin more rapidly than the feed of liquid fuel, until at high loads they are approximately equal.

WILLIAM H. C. HIGGINS, JR.

Witnesses:
J. A. KIRSCH,
CHAS. W. BEALL.