(No Model.) 2 Sheets—Sheet 1.

E. A. LANGFORD.

DOOR INDICATOR.

No. 590,418. Patented Sept. 21, 1897.

Fig. 1.

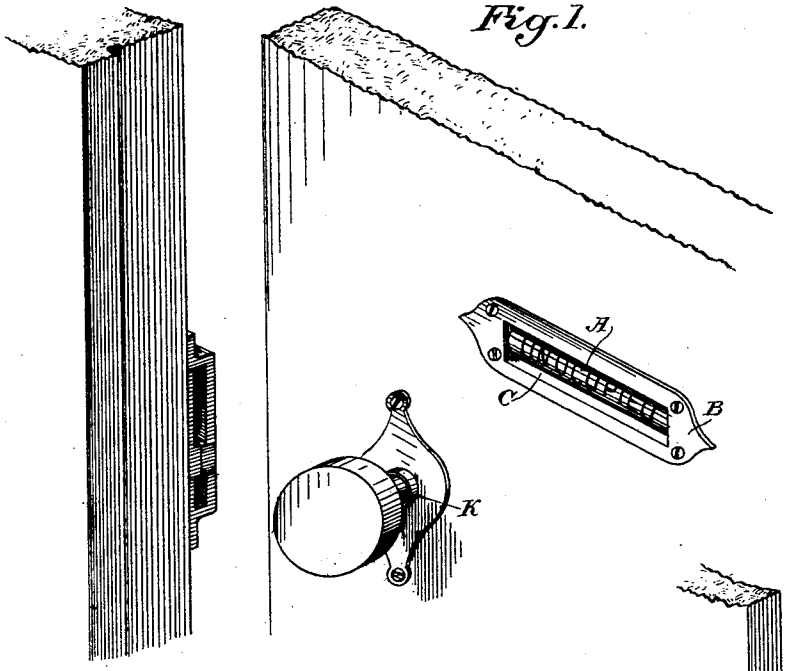

Fig. 2.

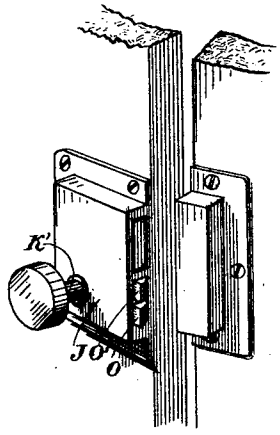

Fig. 3.

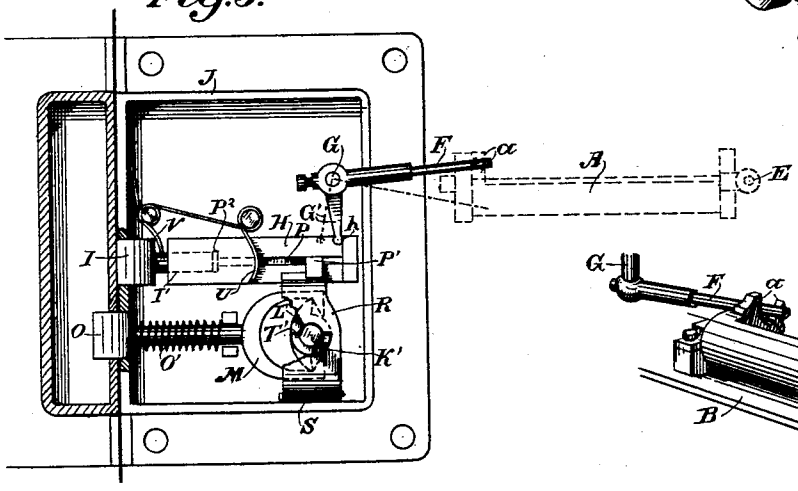

Fig. 4.

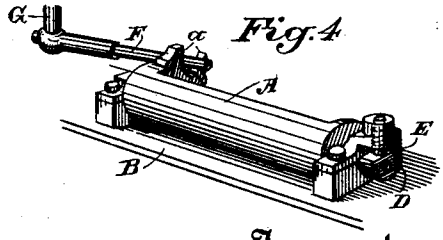

Witnesses,
J. H. Nourse
F. F. Ascheck

Inventor,
Ernest A. Langford
By Dewey & Co.
Attys.

THE NORRIS PETERS CO., PHOTO-LITHO., WASHINGTON, D. C.

(No Model.) 2 Sheets—Sheet 2.

E. A. LANGFORD.

DOOR INDICATOR.

No. 590,418. Patented Sept. 21, 1897.

Fig. 6.

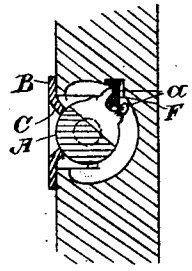

Fig. 5.

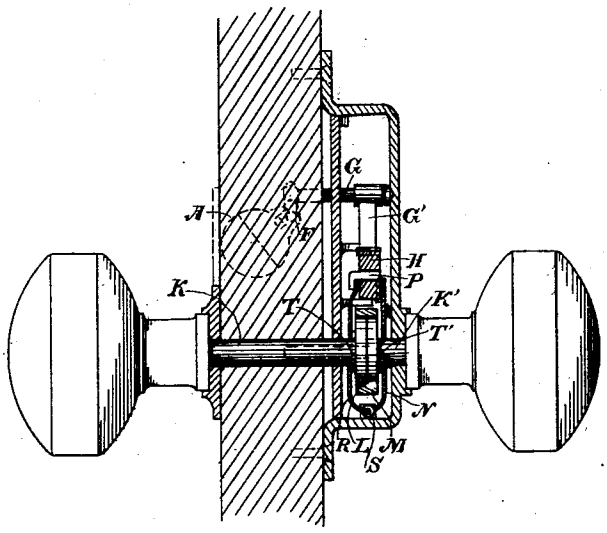

Fig. 7.

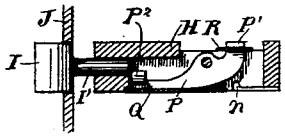

Fig. 8.

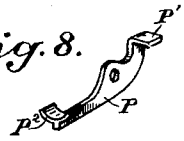

Fig. 9.

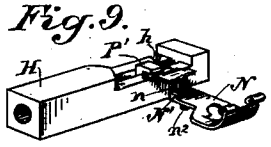

Fig. 10.



Fig. 11.

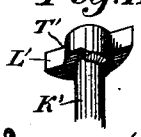

Witnesses,
H. F. Ascheck

Inventor,
Ernest A. Langford
By Dewey & Co. attys

THE NORRIS PETERS CO., PHOTO-LITHO., WASHINGTON, D. C.

UNITED STATES PATENT OFFICE.

ERNEST A. LANGFORD, OF WASHINGTON, CALIFORNIA.

DOOR-INDICATOR.

SPECIFICATION forming part of Letters Patent No. 590,418, dated September 21, 1897.

Application filed April 2, 1897. Serial No. 630,448. (No model.)

To all whom it may concern:

Be it known that I, ERNEST A. LANGFORD, a citizen of the United States, residing at Washington, county of Nevada, State of California, have invented an Improvement in Automatic Door-Plate Indicators; and I hereby declare the following to be a full, clear, and exact description of the same.

My invention relates to a device which I term an "automatic door-plate indicator." It is especially designed for attachment to doors of rooms or other places to indicate whether the same are occupied or unoccupied, and is designed to be moved to thus indicate the condition of the room by the movement of the door-knob and an intermediate mechanism between the lock and the indicator.

It consists in certain details of construction which will be more fully explained by reference to the accompanying drawings, in which—

Figure 1 is an outside view of a door, showing the indicator and the keeper on the casing. Fig. 2 is a view from opposite side. Fig. 3 is a view of interior of lock-casing. Fig. 4 is a perspective of indicator and connected parts. Fig. 5 is a vertical section of door and lock. Fig. 6 is a section through the indicator. Figs. 7, 8, 9, 10, and 11 are detail views of parts of the mechanism.

My indicator in the present construction is shown in the form of a cylinder or segment A, the ends of which are journaled upon a plate B. This plate is cut away, as shown at C, so that the side of the cylinder or segment turning within the cut-away portion may show either of two words, "Occupied" or "Unoccupied," or words of similar import. The end of one of the journals projecting beyond the box may be flattened at right angles, as shown at D, and E is a spring-pressed pin or stop movable radially and at right angles with the journal, so that when the segment or cylinder is turned to expose one of the lettered sides the pin will rest against the flattened portion and prevent further rotation. When it is turned to expose the other side, the pin will be caused to recede by the passage of the angle beneath it and will again be returned by the spring, so as to press against the other flattened side, thus serving to hold the segment in either position with a light pressure. The segment has at the opposite end two lugs or projections *a*, which are adapted to be engaged by an arm or pin F, which is actuated by attachments within the lock, so as to turn the segment to either one or the other of the positions previously described. This arm is fixed upon a shaft G, and this shaft has a projecting arm G′, which engages a groove or channel *h* in the slidable bar H. This bar H is actuated by a pressure-plate or end I, which projects through the edge of the lock-casing J, so that its end will press against the strike-plate or keeper when the door is closed from the inside, and will thus force it and the slide H backward. When this action takes place, the slide H, acting through the arm G′, which engages it, will turn the shaft G and with it the projecting pin or lever F, so as to turn the segment to the position showing the side which indicates that the room is occupied, and as soon as the slide H has been thus pushed back a notch *n* is engaged by a latch N′ on a spring-pressed plate N, which holds it until released.

The knob upon the inside of the door has its spindle fitted to turn independently with relation to the knob which is outside the door, either one of the spindles being bored out, so that the other may turn within it.

The outer spindle K has fixed upon it the cam L, which is adapted to engage the lugs upon the part M, which connects with the latch, whereby the door is held when closed, and this outer knob may be turned and the door opened without affecting the indicator, and the door may also be closed from the outside without altering its position, because when the slide H has been forced back as described it is latched by engagement with the spring-catch N, which falls into the notch *n* in the bar H and retains it in its retracted position until the inner knob is turned to open the door, when the spring-latch N will be disengaged and the bar H allowed to move forward as soon as the plate I is disengaged from the strike-plate, thus acting to again turn the indicator-plate to position to show that the room is unoccupied. This mechanism may be actuated in various ways. In the present case I have shown the following con-

struction: The spindle of the outer knob is turnable, as previously described, independently of that of the inner knob and has the usual cams or lugs by which the latching-bolt O may be withdrawn. In the present case I have shown one well-known form for actuating this device, and it will be manifest that any of the forms in common use may be employed, the latch being retracted by turning the knob and being again forced out when the knob is released by the action of a spring O′.

The locking-bolt is not shown in the present drawings. The sliding bar H is in the present case shown as lying just above the latch-bolt O.

The sliding bar H is made hollow for a part of its length, and the stem of the pressure latch or plate I extends into the end of the bar H, as shown.

Within the bar H is fulcrumed a lever P, the end adjacent to the pin I′ forming a stop against which the end of the pin abuts when the lever P is in its normal position, in which position it is held by a spring Q. The opposite end of the lever P is upturned and projects through a slot or channel in the bar H and has an arm P′ bent at right angles with the upturned portion.

R is a plate hinged as shown at S, having a hole made through it through which the spindle K of the outside knob projects. The outside knob and its spindle turn independently of the inside knob and its spindle and only act upon the latch O to open or close the door, while the spindle of the inside knob will when turned retract the latch O to open the door and will also actuate the indicator mechanism. Thus when the outside knob is pulled or turned it will move the latch O and allow the door to open. The lug or cam T will also act upon the plate R, and thus lift the angular projection P′ of the lever P, and will turn this lever about its pivot-point and depress the opposite end against the tension of the spring Q until the stem I′ is allowed to slide past this lug or projection without acting upon the slide H. This allows the pressure-plate I to move out when clear of the strike-plate and to be pressed in again when the door is closed without moving the slide H.

When the outside knob is released, the spring Q presses the lever P up and brings the lug P^2 into the path of the stem I, and when the door is closed from the inside the plate I will be forced back by contact with the strike-plate, and its stem I′, engaging the lug P^2, will force the slide H back until the notch n engages the lug N′ on the plate N, and this holds the slide in its retracted position. The action of the notch h upon the arm G′ and the arm F turns the indicator to show that the room is then occupied.

The lug N′ on the plate N is normally held in engagement with the notch n of the bar H, when the latter is withdrawn by the action of a small spring n^2, situated beneath or behind the spring-plate N.

The turning of the inner-knob spindle K′ acts upon a cam T′, which is movable so as to depress the plate N and thus disengage the lug N′ from the notch n of the bar H, thus allowing the latter to again move forward and turn the indicator to the position of "Unoccupied." The closing of the door from the outside again acts through the plate R and lever P to disengage the latter from the stem I′ and thus allow it and the plate I to be pressed back when the door is closed without moving the slide H or changing the position of the indicator. While this pressure-plate I is in contact with the face of the strike-plate, which occurs whenever the door is closed, it will be manifest that it will be pushed back, and when the inner end I′ engages with the stop P^2 it will also push the bar H back until it is latched, as previously described, by the catch N′ of the spring-plate N engaging the notch n of the bar H. When in this position, the lever F will have been turned by the pressure of the bar H upon the lever-arm G′, and through its action upon the lugs a of the indicator A′ it will turn the latter so as to expose the word "Occupied," and as long as the bar H remains latched in this position this word will be shown.

If the door be opened from the outside by turning the outside knob, which, as before described, moves independently of the inside one, the action of the spring V upon the pressure-plate I will force the latter out as soon as it is clear of the strike-plate, but this operation will not disengage the bar H from the spring-plate N, and in the same manner the closing of the door will simply slide the shank I′ of the plate I back into the bar H without further action. The turning of the inner knob, however, will turn the shaft K′, and thus acting through the cam T′ will depress the spring-plate N and disengage the lug N′ from the notch n of the bar H, which will allow the bar H to slide forward. When the door is then pulled open, the bar H slides forward, actuated, as before stated, by the spring U.

The sliding forward of the bar H when the door is opened acts through the arm G′ and lever-arm F, as previously described, to turn the indicator A into the position to show the word "Unoccupied," and when the door is closed from the outside the indicator remains in that position.

Having thus described my invention, what I claim as new, and desire to secure by Letters Patent, is—

1. A door-plate indicator movable to expose words of opposite meaning, a mechanism connected with the lock and actuated by the opening and closing of the door to change the position of the indicator.

2. A door-plate indicator having words of opposite meaning upon it, a plate through which either one or the other of said words may be exposed to view from the outside, a lever-arm by which said plate is movable, and mechanism connecting the interior knob of

the door with the lever-arm whereby the opening or closing of the door from the inside actuates the indicator.

3. An indicator having words of opposite meaning imprinted upon it at different points, an opening in the door through which either one or the other of said words may be exposed, a lever-arm engaging the indicator, a mechanism connected with the interior knob-shank whereby the indicator is actuated when the door is closed from the inside to show that the room is occupied, and is again actuated when the door is opened and closed from the outside to show that it is unoccupied and a knob on the exterior of the door whereby the door may be opened and closed without changing the condition of the indicator.

4. An indicator having words of opposite meaning imprinted upon it, an opening in the door through which either one or the other of said words may be exposed at one time, a lever connected with the lock mechanism and actuated by the turning of the inside knob of the door, so that when the door is closed from the inside, the word "Occupied" is exposed, and when the person leaves the room and closes the door from the outside, the word "Unoccupied" will be exposed, and a spring-pressed pin pressing upon the movable indicator so as to hold it in either of the positions to which it may be set.

5. An indicator consisting of a cylindrical segment journaled upon a plate attached to the door and having an opening through which the surface of the cylinder is exposed, words of different meaning imprinted upon the cylinder in parallel lines so that the turning of the cylinder will expose one of said words and conceal the other, lugs connected with the cylinder and engaging a lever-arm connected with a spindle turnable within the lock of the door, a slidable bar actuated by the closing of the door, a connection with the spindle whereby the forcing of the bar back when the door is closed from the inside, turns the lever-arm and the indicator to show that the room is occupied.

6. An indicator consisting of a cylindrical segment journaled upon a plate having a slot through which the surface of the cylinder is exposed, words of opposite meaning imprinted in parallel lines upon the cylinder so that one may be exposed and the other concealed, a lever fixed upon a shaft journaled within the lock-casing and engaging lugs upon the segment so that the moving of the lever in one direction will rotate the segment and expose one of the words, and the movement in the opposite direction will turn the segment to expose the other word, a bar slidable within the lock-casing, having a pressure-plate adapted to engage the strike-plate of the door when closed whereby the bar is forced backward, an arm connecting said bar with the shaft of the lever by which the indicator is actuated and a latch adapted to hold the bar in its retracted position as long as the room is occupied.

7. The combination with a cylindrical segment journaled upon the door having words of opposite meaning imprinted in parallel lines thereon, and a slotted plate through which either of said words may be exposed, of a lever engaging said plate so as to turn it to expose either of said words, a bar slidable within the lock-casing having an engagement by which the lever is moved, a pressure-plate normally projecting through the side of the casing and slidable so as to be forced back by the contact of the pressure-plate with the strike-plate of the door-casing, said pressure-plate acting upon the sliding bar to force it back, a spring-catch adapted to engage said bar when thus forced back and retain it in said position whereby the indicator remains with a word exposed, a knob exterior to the door whereby the latter may be opened from the outside, a lug or cam upon the exterior-knob spindle, a lever fulcrumed in the sliding bar and engaged by a plate intermediate between said lever and the cam, whereby the pressure-plate is disengaged from the slide when the door is opened from the outside, and is then movable when the door is opened or closed without acting upon the sliding bar or indicator.

8. The combination with a door of a bar slidable within the lock-casing, an arm engaging said bar adapted to actuate a cylindrical segment, the surface of which is exposed through an opening in the door with words of opposite meaning imprinted thereon whereby one of said words may be exposed when the bar is retracted and the other when it is pressed forward, a presser-plate having a shank entering the end of the slidable bar, a stop-lever fulcrumed within the bar against which the shank of the presser-plate abuts whereby the closing of the door so that the presser-plate is forced back by the strike-plate upon the door-casing will force the sliding bar backwardly, a spring-latch by which it is engaged and normally retained in this position while the door is closed and the room remains occupied, a cam fixed upon the inner-knob spindle and engaging the latching-plate so that when the knob is turned and the door opened, the sliding bar is disengaged, and a spring by which it is forced forward when the door is opened to change the position of the indicator-plate and show that the room is unoccupied.

In witness whereof I have hereunto set my hand.

ERNEST A. LANGFORD.

Witnesses:
S. H. NOURSE,
H. F. ASCHECK.