G. H. LANG.

LAUNDRY MARKING MACHINE.

APPLICATION FILED NOV. 29, 1909.

1,143,768.

Patented June 22, 1915.

4 SHEETS—SHEET 1.

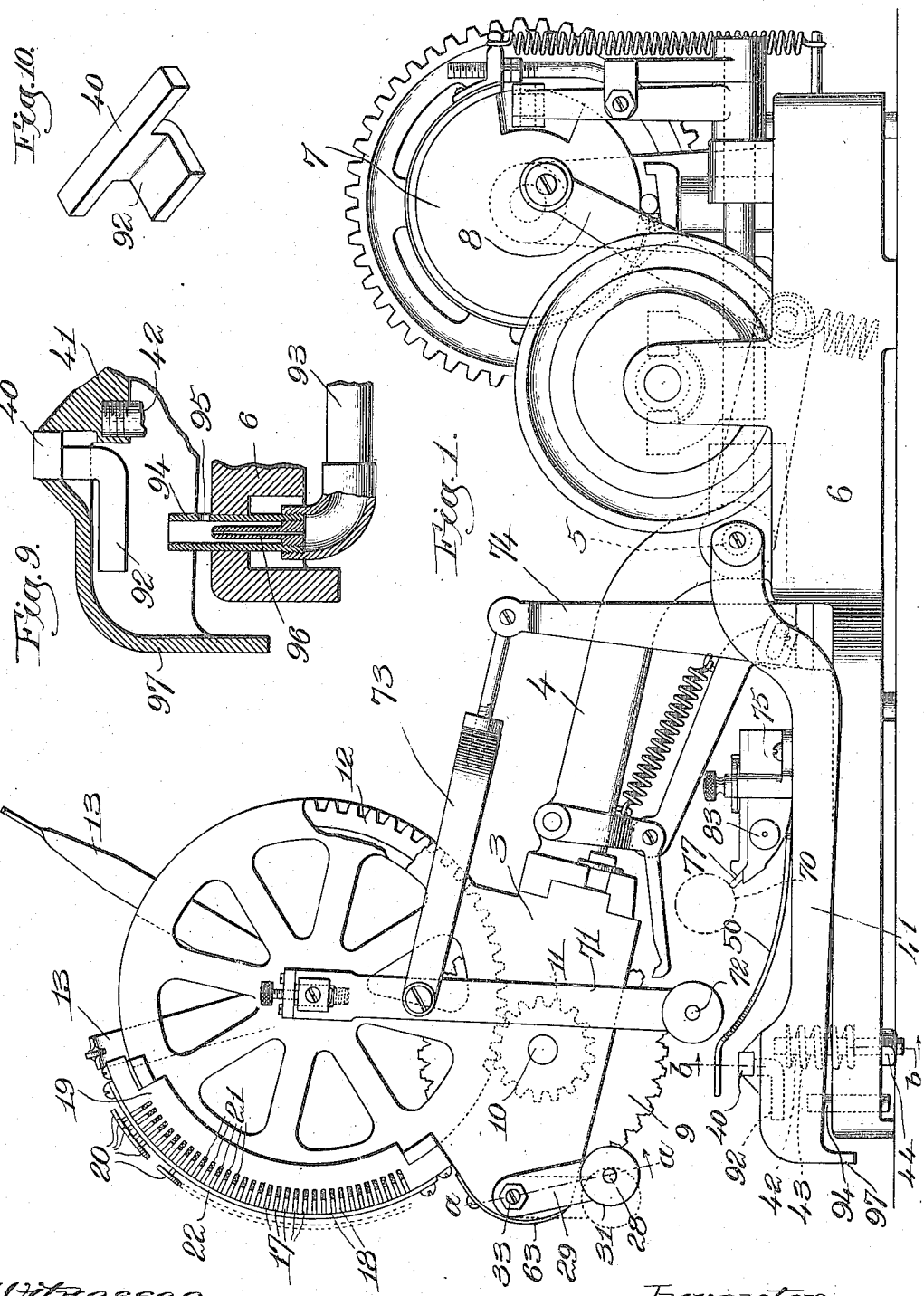

Witnesses.
Thomas J. Drummond.
Robert Scott

Inventor.
George H. Lang,
by Crosby & Gregory Attys.

G. H. LANG.

LAUNDRY MARKING MACHINE.

APPLICATION FILED NOV. 29, 1909.

1,143,768. Patented June 22, 1915.

4 SHEETS—SHEET 2.

Fig. 2.

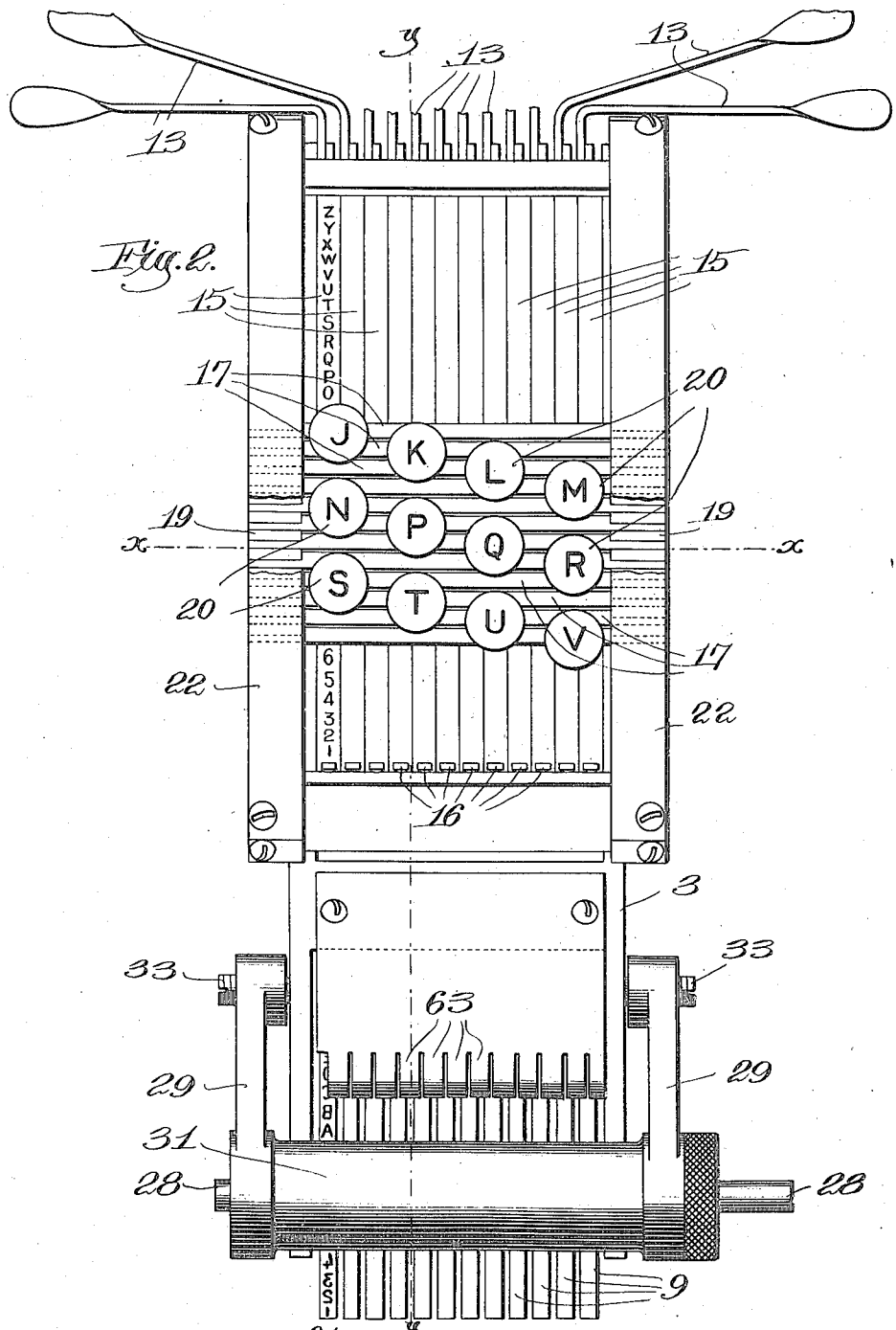

Fig. 3.

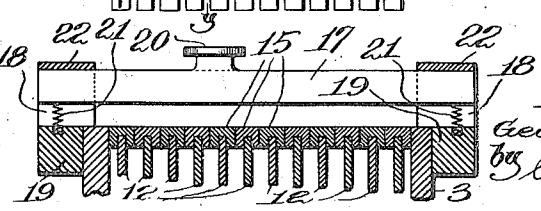

Witnesses.
Thomas J. Drummond
Robert Scott.

Inventor.
George H. Lang,
by Crosby & Gregory
Attys.

G. H. LANG.

LAUNDRY MARKING MACHINE.

APPLICATION FILED NOV. 29, 1909.

1,143,768.

Patented June 22, 1915.

4 SHEETS—SHEET 3.

Fig. 4.

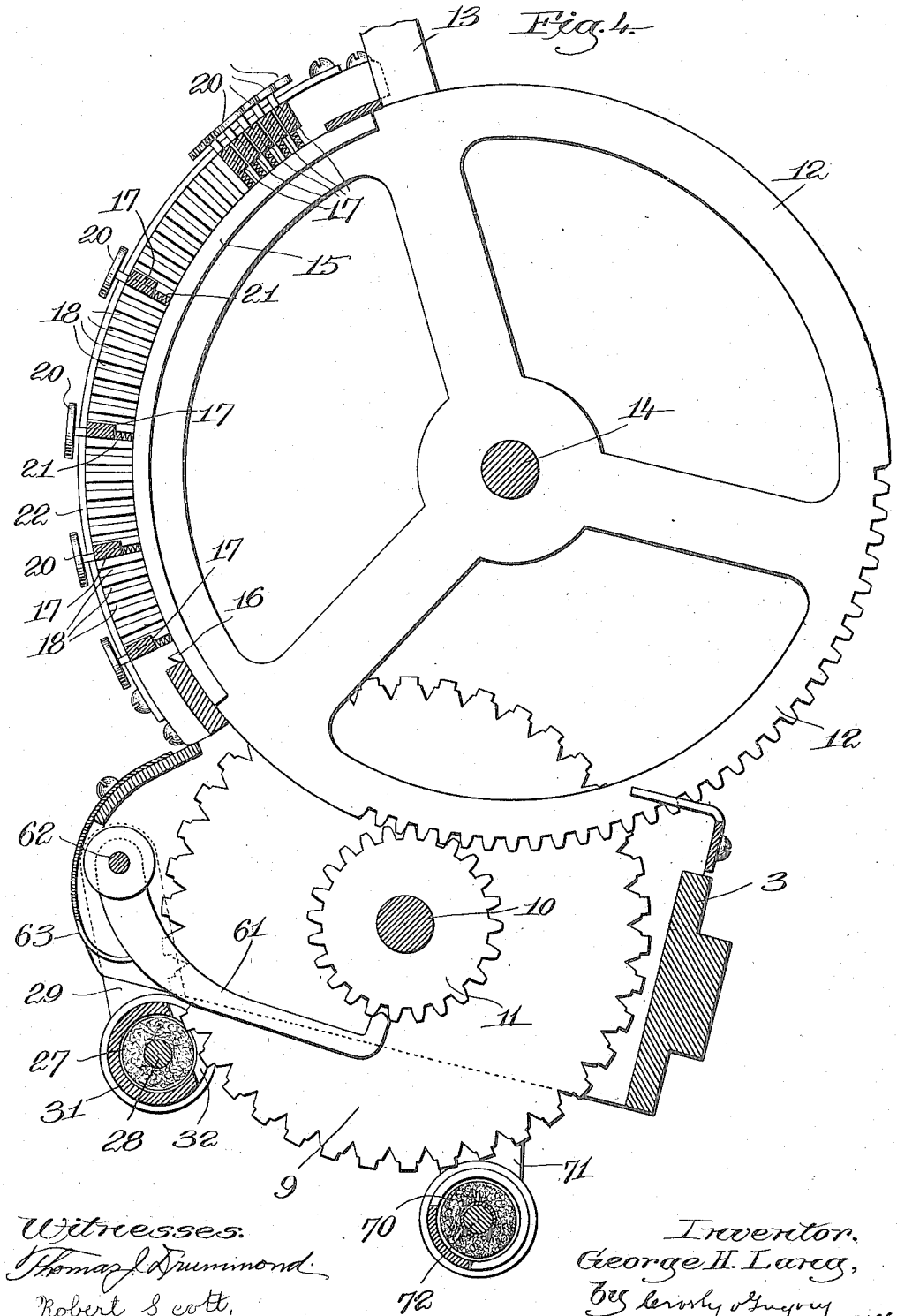

Witnesses:
Thomas J. Drummond
Robert Scott.

Inventor.
George H. Lang,
by Crosby & Gregory Att'ys.

G. H. LANG.

LAUNDRY MARKING MACHINE.

APPLICATION FILED NOV. 29, 1909.

1,143,768. Patented June 22, 1915.

4 SHEETS—SHEET 4.

Fig. 5.

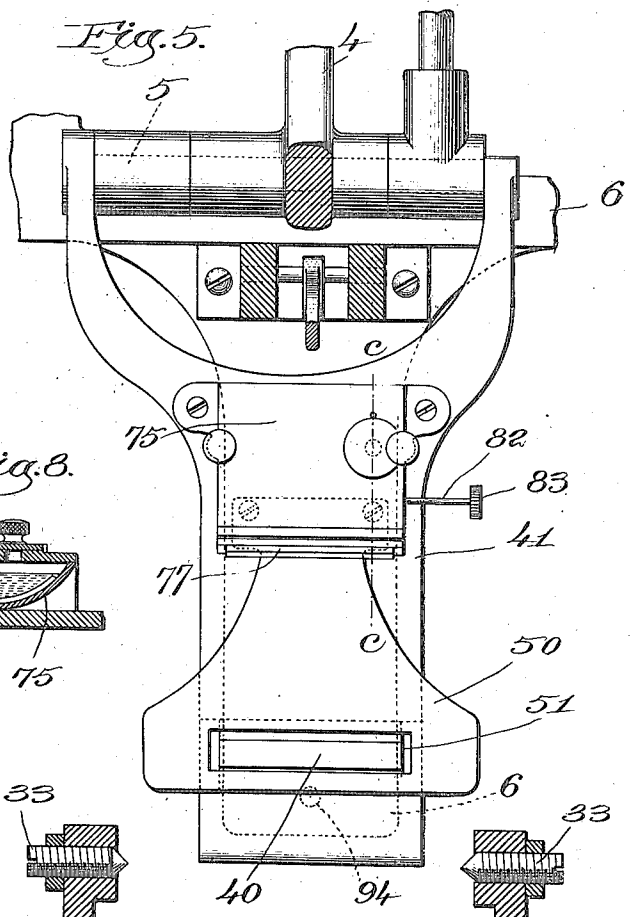

Fig. 8.

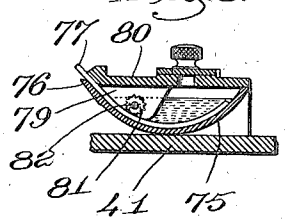

Fig. 6.

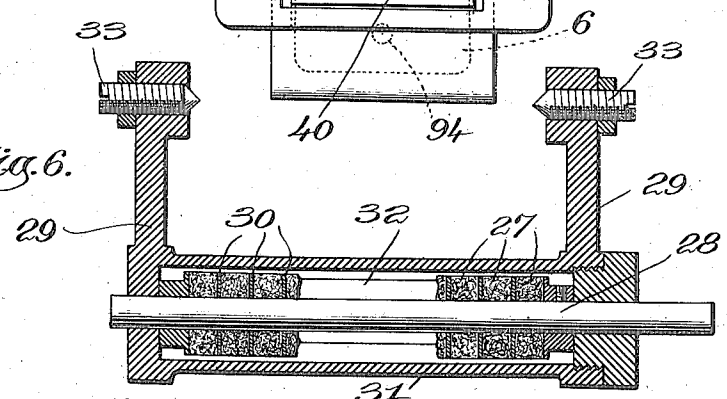

Fig. 7.

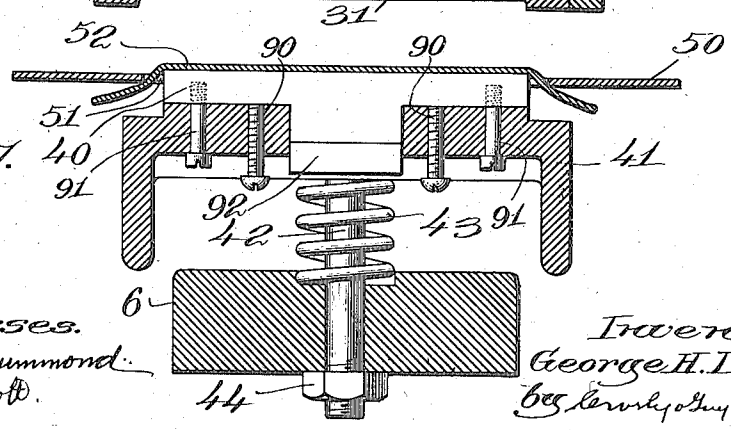

Witnesses.
Thomas J. Drummond.
Robert Scott.

Inventor.
George H. Lang,
by Crosby & Gregory Att'ys.

UNITED STATES PATENT OFFICE.

GEORGE H. LANG, OF BOSTON, MASSACHUSETTS.

LAUNDRY-MARKING MACHINE.

1,143,768. Specification of Letters Patent. Patented June 22, 1915.

Application filed November 29, 1909. Serial No. 530,347.

To all whom it may concern:

Be it known that I, GEORGE H. LANG, a citizen of the United States, residing at Boston, county of Suffolk, and State of Massachusetts, have invented an Improvement in Laundry-Marking Machines, of which the following description, in connection with the accompanying drawing, is a specification, like characters on the drawing representing like parts.

This invention relates to machines especially adapted for marking laundry, but which are also adapted for marking other articles than laundry. The device herein illustrated is in the nature of an improvement on the devices shown in my former Patents No. 864,790, dated September 3, 1907, and No. 877,653, dated January 28, 1908. The devices illustrated in said patents are provided with a printing head carried by the end of a vibrating arm, which printing head embodies a plurality of independently-adjustable type wheels.

The objects of my present invention are to provide an improved construction by which the type wheels can be quickly and accurately set to print any desired characters; to provide a novel construction for keeping the type clean so that a clear-cut impression will be made; to provide a novel device for protecting the portion of the goods surrounding the part where the impression is to be made; to provide a novel inking arrangement for inking the type; to provide for heating the goods as the impression is made thereon by the type so as to make an indelible impression; and to otherwise improve machines of this class, all as will be more fully hereinafter described and then pointed out in the appended claims.

Referring to the drawings, wherein I have shown the preferred embodiment of my invention, Figure 1 is a side view of a printing machine embodying said invention; Fig. 2 is an enlarged front elevation of the printing head; Fig. 3 is a section on the line *x*—*x*, Fig. 2; Fig. 4 is a section on the line *y*—*y*, Fig. 2; Fig. 5 is a plan view of the platen and guard; Fig. 6 is an enlarged section through the type-cleaning device on the line *a*—*a*, Fig. 1; Fig. 7 is an enlarged section on the line *b*—*b*, Fig. 1; Fig. 8 is a section through the ink reservoir on the line *c*—*c*, Fig. 5; Fig. 9 is a section through the front end of the platen support showing the means for heating the platen; Fig. 10 is a perspective view of the platen.

The machine herein illustrated is similar to that shown and described in my prior patents in that it has a printing head designated generally by 3 that is carried by the end of a vibrating arm 4 that is pivoted at 5 to the frame 6 of the machine and in that it is given its vibrating motion by means of a crank disk 7 which is connected to the end of the arm by a link 8. The printing head also embodies a plurality of independently adjustable type wheels 9 which are mounted on the pin or stud 10 extending from one side to the other of the printing head, and each of which has rigid therewith a pinion 11 that meshes with a toothed setting member 12 provided with a handle 13 by which it may be set. The parts thus far described are or may be all as shown in my above-mentioned patents and form no part of my present invention.

One feature of the present invention relates to the manner of securing the proper adjustment of the type wheels for printing any desired character. The setting members 12 are herein shown in the shape of disks or wheels, each of which is provided with gear teeth on a portion of its periphery. These wheels are all mounted on a rod or shaft 14, and each has a stop projection 16 extending outwardly therefrom. A plurality of stop devices, each one corresponding to a character on the type wheels, are associated with the setting members and are arranged to be depressed into the path of movement of the projections 16. Each stop is common to all of the setting members, that is, whenever any stop is depressed it is in the path of all of the projections 16. These stops are properly designated so that if it is desired to set any type wheel to indicate the letter "C," for instance, the correspondingly designated stop is depressed and then the setting member corresponding to the desired type wheel is adjusted until the projection 16 on said setting member engages the depressed stop. The stop members are herein designated 17 and are shown as bars extending across the width of the head and confined at their ends in guide slots 18 formed in the cheek pieces 19 of the head, each bar 17 being provided with a

thumb-piece 20 on which is imprinted or otherwise placed a character, as shown in Fig. 2. The bars are normally held elevated by means of springs 21 situated in the guide slots, 18. Two strips or plates 22 overlie the ends of the stop members 17 and hold them in the slots 18. In Fig. 2 I have only shown a few of these bars 17, but it will be understood that as many of them may be employed as there are different characters on the various type wheels. When the stops are in their normal or elevated position, they are above the projections 16, as will be clearly seen from Fig. 4, so that the setting members 12 may be freely moved. Whenever any stop is depressed, however, it comes into the path of movement of the projections 16 and will thereby limit the turning movement of any setting member. These various stops are so designated that if the stop designated "M" in Fig. 2, for instance, is depressed, and any one of the setting elements is thereafter adjusted, said stop will by its engagement with the projection 16 bring said setting member to rest at such a point that the letter M on the corresponding type wheel will be in position to make an impression.

If desired the portion 15 of the rim of each setting member which is located beneath the stops may be wider, as shown in Figs. 2 and 3, and characters similar to those on the type wheels may be imprinted on such wide portions. This, however, is not essential. One advantage of making these portions of the rim of the setting members wider is that they serve to assist in keeping the setting members 12 properly spaced and in proper alinement. It will be noted that each of the stops 17 is common to all of the setting members, and, therefore, the setting of the various type wheels is done by the use of only one set of stops. This is an advantage because it enables an operator to very quickly and accurately set the various type wheels for printing any desired combination of characters.

The arrangement above described is such that the type wheels can be operated in any desired order. This is an advantage over such constructions as require that the type wheels should be operated in a predetermined order, because if the operator makes a mistake in any figure when setting up the machine she can readily correct the mistake by simply resetting that particular type wheel which is improperly set and without necessity of resetting other type wheels.

In order to mark laundry and similar work, it is essential that the type wheels should always be kept clean and free from lint. I have provided herein a device to effect this result and which is in the form of a cleaning pad adapted to have engagement with the type on the type wheels and comprising a plurality of independently-movable sections. These sections are herein shown as disks 27 of felt or any other soft material which are loosely mounted on a rod 28 carried by a swinging support 29. The sections 27 are preferably separated by other disks 30, which latter are of such a nature as to permit any two adjacent sections 27 to turn freely relative to each other. These sections 27 of the cleaning pad are preferably inclosed within a housing 31 carried by the swinging support 29 and provided on one side with an opening 32 through which the disks are exposed. The support 29 may be secured to the head in any suitable way and is herein shown as sustained from pointed screws 33. The cleaning pad comprising the sections 27 normally hangs in the dotted line position Fig. 1 but can be swung into the full line position Figs. 1 and 4 thereby to bring the pad against the type. If, when the pad is in this position, the type disks are turned by operating the handles 13 the type will be thoroughly cleaned.

I will preferably make the pad with as many separate sections as there are type disks but this is not essential.

The work to be printed rests on a platen 40 which is carried by a support 41. This support is yieldingly sustained and is mounted to swing about the axis 5 as a center. The normal position of the platen is such that the type will contact therewith before the printing head reaches the lower limit of its movement and therefore the type will be in contact with the platen while the printing head is completing its downward movement and for a short time during the initial upward movement. The advantage of this is that the machine may be speeded up and yet give sufficient time to make a good impression. By making the support 41 to pivot about the axis 5, there will be no relative movement between the platen and type wheels while they are in contact because the arm 4 and the support 41 both move about the same center. The platen support 41 has secured thereto a pin 42 which extends down through an extension on the frame 6 and a spring 43 surrounding the pin and situated between the support 41 and the frame serves as the yielding support for the platen. The normal position of the platen may be adjusted by means of the nut 44 on the screw 42.

In the machine herein shown each type wheel has thereon a good many characters, and as a result the adjacent type on each wheel are comparatively close together. With such a type wheel there is danger that the type on either side of the one which is properly placed for printing an impression will contact with the work and leave an impression unless the operator is very careful to hold the work stretched tightly and

smoothly over the platen. In order to prevent the possibility of any such thing happening, I have herein provided a guard which is associated with the platen and which covers up the portion of the work surrounding the place where the impression is to be made. This guard is shown at 50 and is made of a piece of resilient sheet metal which is provided with an aperture 51 of a size to receive the platen 40. The guard is shown as being secured at one end to the support 41 and in its normal position it is situated above the platen, as shown clearly in Fig. 1, thus affording plenty of room between it and the platen to insert the work 52 to be marked. When the work is inserted, the operator then depresses the guard 50, as shown in Fig. 7, and this operation serves to stretch the work over the platen and to protect the portion of the work surrounding that which is stretched over the platen. When the work is thus held and the printing head descends, there will be no possibility that any thing but the desired impression will be made on the goods.

The type wheels are held in their adjusted position by means of the retaining pawls 61 which are adapted to engage the teeth of the gears 11 and are pivotally hung on the rod 62 extending across the head. Said pawls are yieldingly held against the gears 11 by means of spring fingers 63.

The type are inked by means of the inking pad 70 which is supported on the swinging arms 71 and which may have any suitable or usual construction, but is preferably in the form of a cylindrical pad or roll carried by a rod 72. The arms 71 which are pivoted to the printing head have pivotally connected thereto a yoke 73 which is pivoted at one end to a fixed stand 74 so that as the printing head rises and falls the inking pad will be moved toward and from the type in a well-known manner. Heretofore it has been the practice to saturate the inking pad with ink and then to use the machine until the pad became dry, and then to remove the pad and saturate it again with ink. I have provided a novel device which continually supplies ink to the inking pad so that an impression of a uniform color and shade may be made at all times. The means herein shown for supplying ink to the inking roll comprises a reservoir 75 adapted to contain ink and provided with an opening 76 through which a wick 77 may be projected. The bottom of the ink reservoir is preferably rounded, as shown in Fig. 8, and the wick rests against such rounded bottom and is held in this position by ribs 79 secured to the cover 80 of the receptacle. The wick is projected more or less by toothed wheels 81 that are mounted on a shaft 82 that is journaled in the reservoir and is provided with a thumb-piece 83 by means of which it may be turned. The wick is of absorbent material so that the projected end thereof will always be saturated with ink. The ink reservoir is preferably carried by the support 41 and is so situated that when the printing head is depressed and the inking roll is thrown backward into the dotted line position Fig. 1, said roll will come against the end of the wick and will thus receive a slight quantity of ink. The inking roll is loosely mounted on the pin 72 so that said roll will be turned slightly each time that it engages the type and, therefore, a fresh surface will be continually presented to the wick. This forms a very simple but effective means for keeping the inking pad always moist, and as a result the machine will always make an impression of a uniform shade.

The impression made by laundry-marking machines as heretofore constructed will fade out after the marked goods have been washed a few times, thus necessitating remarking the goods. I have discovered that if the goods are heated when the impression is made on them, a permanent and truly indelible mark will result which will not be faded out by repeated washing of the goods, and in order to provide for thus heating the goods I propose to make my platen of metal or some other good conductor of heat and to employ a heating device by means of which the platen may be heated sufficiently to heat the goods as they are placed thereon. While the platen may be of any suitable heat-conducting material and may be heated in any appropriate way without departing from the invention, I prefer to make said platen of copper and to heat it by applying heat to an arm 92 which is integral with the platen and projects forwardly therefrom. In the embodiment herein shown, this arm is heated by a gas flame generated by a burner situated directly beneath the arm and connected to a gas supply pipe 93. The burner shown comprises a burner tube 94 having an aperture or apertures 95 for the admission of air, and also provided with a plug 96 having a small aperture for the passage of gas. This constitutes one type of Bunsen burner which will give a hot flame without the generation of soot. The flame is protected by the hood-shaped end 97 of the support 41 so that the goods being marked cannot be accidentally burned by contact with the flame.

The platen is preferably made removable and also adjustable. It is shown as occupying a groove in the holder or support 41 and the bottom of the groove is provided with an aperture of a size to readily receive the arm 92. The platen rests on two leveling screws 90 that are screw-threaded into the support and is held in place by two clamping screws 91 that pass through aper-

tures in the support and have screw-threaded engagement with the platen. These clamping screws serve to clamp the platen down hard against the leveling screws, and by adjusting the latter screws, either end of the platen may be raised or lowered as desired or as is necessary to cause all the type wheels to bear against the platen with the same pressure.

Most laundry marking machines use rubber or some other soft material for the platen and type disks of cast metal. I use a metal platen as above described and in order to secure a good impression without danger of breaking the type, I propose to make my type disks of steel. I find that by using steel disks and a hard metal platen which is mounted to yield, I can make a clearer impression than can be made with a platen of softer material and without any danger that the type will be broken.

My invention is not confined to the construction herein illustrated which is merely the preferred embodiment of the invention.

Having fully described my invention, what I claim as new and desire to secure by Letters Patent is:—

1. In a printing machine, the combination with a plurality of type wheels, of individual setting members, one for each type wheel capable of operation independently in any order, and a plurality of stops for limiting the movement of each setting member, each stop being common to all the setting members.

2. In a printing machine, the combination with a plurality of independently-adjustable type wheels, of a setting member for each type wheel, each setting member having rigid therewith a handle by which it is manipulated and said setting members being independently operable in any order, and settable means common to all the setting members to limit the movement thereof, said means being normally in inoperative position but when set occupying a position to engage the setting members as they are moved and thereby limit the movement thereof.

3. In a printing machine, the combination with a plurality of independently-adjustable type wheels, of a setting member for each type wheel, said setting member being independently operable in any order, each setting member having a projection, and a plurality of stops normally out of the path of the projection but movable into said path, each stop being common to all the setting members.

4. In a printing machine, the combination with a plurality of independently-adjustable type wheels, of a plurality of setting members for the type wheels arranged side by side, said setting members being independently operable in any order, each having a projection, and a plurality of stop bars, one for each of the characters on the type wheels, normally sustained above the projections but depressible into engagement with the projections as the setting members are adjusted.

5. In a printing machine, the combination with a printing head having a plurality of independently-adjustable type wheels and means to set said type wheels, of a yoke-shaped frame pivotally sustained by said head eccentrically of said type wheels and adapted to swing toward and from the type wheels, and a cleaning pad carried by said frame and adapted to be brought into and out of contact with said type wheels by a swinging movement of said frame, said frame normally sustaining the pad separated from the type wheels.

6. In a printing machine, the combination with a plurality of independently-adjustable type wheels, of means to set said type wheels, and a cleaning pad arranged to be brought against the type wheels and comprising a plurality of separate sections, and means to sustain said sections for independent movement.

7. In a printing machine, the combination with a plurality of independently-adjustable type wheels and means to adjust said wheels, of a cleaning pad comprising a plurality of separate disks, and means to sustain said disks for independent rotative movement.

8. In a printing machine, the combination with a frame having an extension, an arm pivotally mounted intermediate of its ends on said frame and the end of said arm extending over the frame extension, a printing head sustained on said end of the arm, a platen support mounted to swing about the axis of movement of the arm and situated between the latter and said frame extension, a platen on said support, a spring interposed between said frame extension and the platen support, and means coacting with the other end of the arm to move the printing head toward and from the platen.

9. In a printing machine, the combination with a platen, of a printing head having type movable toward and from the platen, an ink reservoir having a wick-receiving aperture and provided with a cover having guiding ribs, a wick held in position by said ribs and extending through the aperture, an ink pad, and means to move the ink pad to bring it against the wick and the type wheels alternately.

10. In a printing machine, the combination with a printing head having type, of an ink reservoir having a wick-receiving aperture, a cover for said reservoir provided with holding ribs, a wick within the reservoir projecting through said aperture and held in position by said ribs, an inking pad,

and means to move the inking pad against the projecting end of the wick and type alternately.

11. In a printing machine, the combination with a frame, of a platen support, a platen sustained by said support, a rising and falling printing head sustained by the frame and provided with type-bearing members, inking means carried by said head and movable therewith and to and from the type members during the rising and falling movement of the head, said platen having a horizontally-extending arm, and a burner situated beneath the arm to heat the latter and the platen, the platen support being provided with a hood to cover and protect the burner and said arm.

12. In a printing machine, the combination with a frame, of a platen support sustained thereby, a platen sustained by the support and having its upper surface exposed, a rising and falling printing head carried by the frame and provided with type members, inking means carried by said printing head and movable toward and from the type members as the frame rises and falls, said platen having a horizontally-extending arm, a burner to heat said arm and thereby heat the platen, said platen support having integral therewith a protecting hood which covers the burner and the arm.

13. In a printing machine, the combination with a plurality of type wheels, of a handle operatively connected to each type wheel for setting the same, said type wheels being capable of operation independently and in any order, and a plurality of stops limiting the setting movement of each type wheel, each stop being common to all the type wheels.

14. In a printing machine, the combination with a plurality of type-carrying members, of means for actuating said members separately, said members being capable of actuation independently and in any order, a plurality of stops for limiting the setting movement of each type-carrying member, each stop being common to all the type-carrying members.

15. In a printing machine, the combination with a plurality of type wheels, of a handle operatively connected to each type wheel for setting the same, said wheels being capable of operation independently and in any order, and settable means independent from the handles and common to all the type wheels to limit variably the movement thereof, said means being normally in inoperative position, but when set occupying a position to limit the movement of the type wheels.

16. In a printing machine, the combination with a frame, of a platen support, a platen sustained by said support, a rising and falling printing head sustained by the frame and provided with type-bearing members, inking means carried by said head and movable therewith and to and from the type members during the rising and falling movement of the head, said platen having a horizontally-extending arm, means situated beneath the arm to heat the latter and the platen, said platen support being provided with a head to cover and protect the heating means and said arm.

In testimony whereof, I have signed my name to this specification, in the presence of two subscribing witnesses.

GEORGE H. LANG.

Witnesses:

LOUIS C. SMITH,

THOMAS J. DRUMMOND.