April 14, 1925. 1,533,229

O. A. COLBY

ELECTRIC FLATIRON

Filed Oct. 24, 1922 2 Sheets-Sheet 1

Fig. 1.

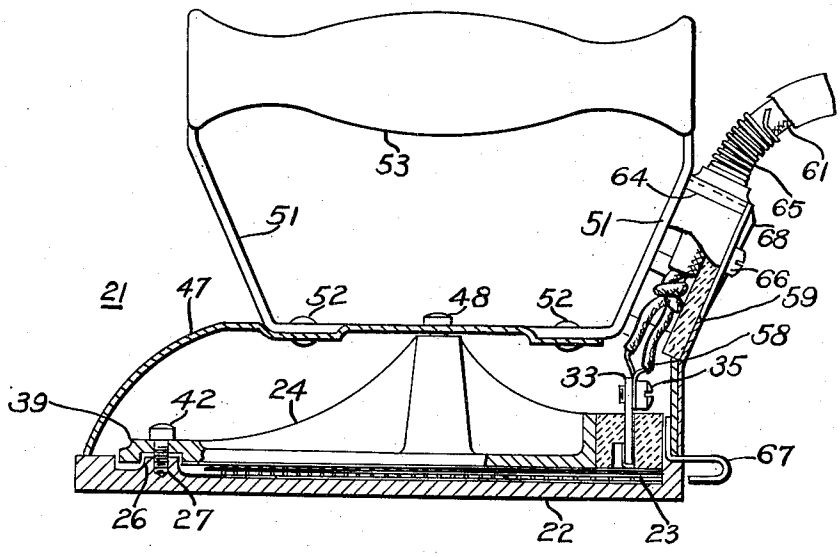

Fig. 2.

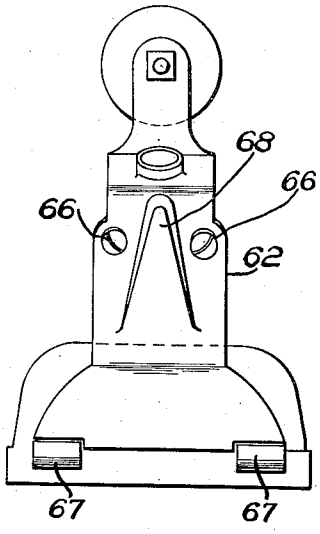

Fig. 3.

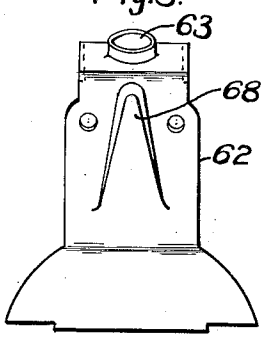

Fig. 4.

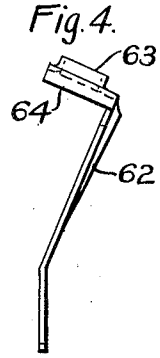

WITNESSES:

A. G. Schiefelbein

H. M. Biebel

INVENTOR

Ora A. Colby.

BY

Wesley G. Carr

ATTORNEY

April 14, 1925. 1,533,229

O. A. COLBY

ELECTRIC FLATIRON

Filed Oct. 24, 1922 2 Sheets-Sheet 2

Fig. 5.

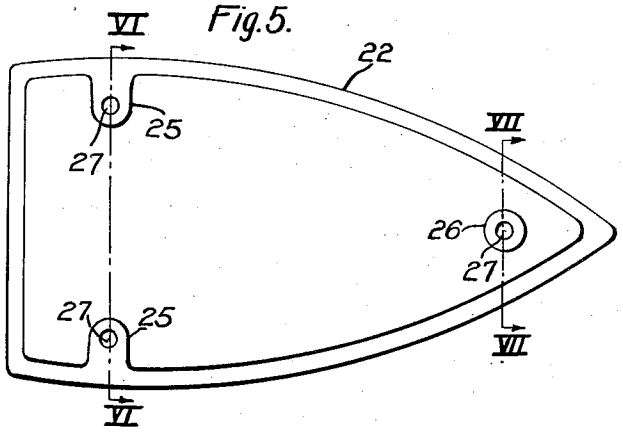

Fig. 6

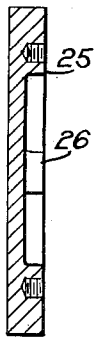

Fig. 7.

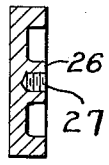

Fig. 8.

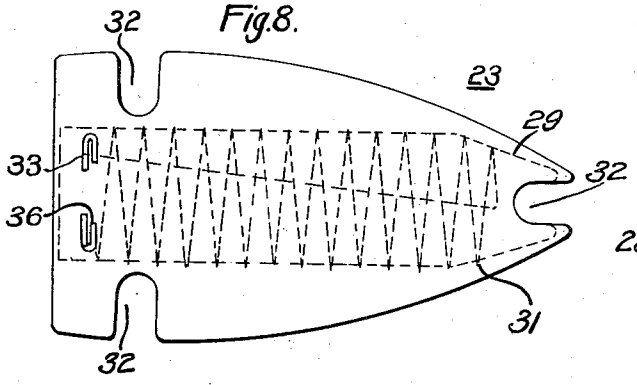

Fig. 9.

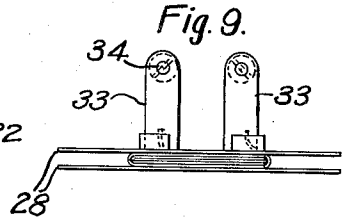

Fig. 11.



Fig. 10.

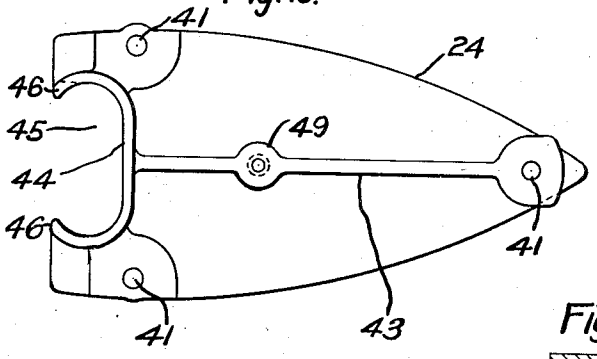

Fig. 12.

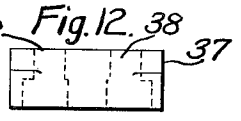

Fig. 13.

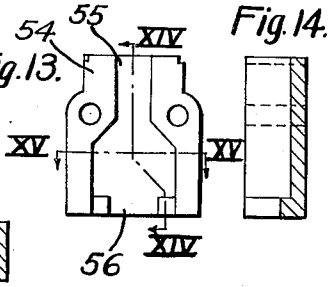

Fig. 14.

Fig. 15.

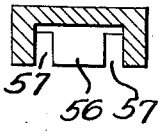

WITNESSES:

A. G. Schiefelbein

W. M. Bielert

INVENTOR

Ora A. Colby.

BY

Wesley G. Carr

ATTORNEY

Patented Apr. 14, 1925. 1,533,229

UNITED STATES PATENT OFFICE.

ORA A. COLBY, OF IRWIN, PENNSYLVANIA, ASSIGNOR TO WESTINGHOUSE ELECTRIC & MANUFACTURING COMPANY, A CORPORATION OF PENNSYLVANIA.

ELECTRIC FLATIRON.

Application filed October 24, 1922. Serial No. 596,552.

To all whom it may concern:

Be it known that I, ORA A. COLBY, a citizen of the United States, and a resident of Irwin, in the county of Westmoreland and State of Pennsylvania, have invented a new and useful Improvement in Electric Flatirons, of which the following is a specification.

My invention relates to electrically heated appliances and particularly to electric flat irons.

One object of my invention is to provide a relatively simple and easily assembled and disassembled electric iron having a minimum number of parts.

Another object of my invention is to provide a novel and simple terminal construction for an electric iron.

Another object of my invention is to provide a so-called "travellers iron", that shall be relatively simple and of neat appearance and so constructed that it will withstand the relatively severe service to which such irons are subjected.

In practicing my invention, I provide a base plate having a depression in its upper surface and a plurality of bosses in said depression. A flat heating element is located on the base plate in the depression, portions being cut away to receive the bosses, whereby the element may readily be located in its proper position and prevented from longitudinal and lateral movements. A top plate, having the depressions in its under surface registering with said bosses, is located on the top of the heating element and is clamped against the base plate. The top plate is provided with an opening at the rear edge thereof through which a refractory insulating block projects. Terminal members, electrically connected to the resistor of the heating element, extend through openings in the refractory block which is pressed against the upper surface of the heating element by means integral with the top plate. A cover member for the iron is held in its proper operative position by a single securing means extending through the cover into the top plate and is provided with the usual handle straps and handle. A refractory block is provided adjacent the rear handle strap, having grooves in one surface to receive a supply-circuit conductor, the ends of which are electrically connected to the terminal members.

In the drawings,

Figure 1 is a view, in vertical longitudinal section, of an electric iron embodying my invention,

Fig. 2 is a rear end view thereof,

Figs. 3 and 4 are views, in rear and in side elevation, respectively, of a terminal cover plate.

Fig. 5 is a top plan view of a base plate,

Figs. 6 and 7 are views, in vertical lateral section, of the base plate, taken on the lines VI—VI and VII—VII, respectively, of Fig. 5,

Fig. 8 is a top plan view of a heating element comprising a portion of the device embodying my invention,

Fig. 9 is a view, in rear elevation, of the heating element,

Fig. 10 is a top plan view of a top plate,

Figs. 11 and 12 are top, plan and side elevational views, respectively, of a refractory terminal-supporting block,

Fig. 13 is a view, in side elevation, of a refractory block,

Fig. 14 is a vertical sectional view taken on the line XIV—XIV of Fig. 13, and

Fig. 15 is a sectional view of the refractory block illustrated in Fig. 13, taken on the line XV—XV thereof.

An electric iron, designated generally by the numeral 21, comprises a bottom plate 22, a heating element, designated generally by the numeral 23, and a top plate, designated by the numeral 24, these three members comprising what may be designated as the body portion of the iron.

The base plate or working surface 22 is more particularly illustrated in Figs. 5 to 7, inclusive, and comprises a cast metal member, the bottom surface of which is smooth and highly polished. The upper surface of the member 22 has a depression therein or, to state it otherwise, the upper surface is provided with a peripheral lateral flange extending therearound. A plurality of bosses 25 are located adjacent the rear edge of the member 22, which is substantially triangular in shape, these bosses being substantially integral with the peripheral boss. A third boss or lug 26 is located near the narrow end of the member 22. Each of the lugs or bosses 25 and 26 is provided with a screw threaded opening 27 therein, for a purpose to be hereinafter set forth in detail.

The heating element 23 may be of any

suitable or desired construction, but, as here illustrated, comprises an upper and a lower sheet 28 of a suitable electric insulating material, such as mica, between which is located the resistor proper. A relatively narrow, elongated sheet 29, of mica or other suitable insulating material, has wound thereupon a suitable resistor member 31, a second sheet being placed in proper operative position relatively thereto to permit of returning the forward end of the resistor member 31 to the rear end of the heating element.

Both of the sheets 28 are provided with recesses or notches 32 so located that they will register with the bosses 25 and 26, respectively, whereby the heating element 23 is held in its proper operative position within the depressed upper surface of the base plate 22 and, by reason of the three bosses and the co-operating recesses in the sheets 28, the heating element will be prevented from longitudinal and lateral movements relatively to the base plate 22.

The ends of the resistor member 31 project through suitable openings in the upper plate 28 and extend a short distance therebeyond. A plurality of terminal members extending at substantially right angles to the plane of the heating element 23, comprise relatively thin, narrow metal bars 33 which are provided, at their upper ends, with screw-threaded openings 34 for receiving clamping screws 35. The lower end of each of the members 33 is provided with a lateral integral and return-bent extension 36, the ends of the resistor member 31 being clamped between the body portions of the members 33 and the return-bent portions 36.

The herein described construction of terminal members for the resistor 31 of the heating element is one which is not inherently self supporting and, to support the same, a refractory terminal-supporting member 37 is provided which is particularly illustrated in Figs. 11 and 12 of the drawing and comprises a substantially rectangular block of a suitable refractory electrical-insulating material having a plurality of openings 38, the lateral dimensions of each of which differ in different portions of its length. At the upper or outer portion, each opening 38 is just large enough to loosely receive the corresponding terminal member 33 and at the lower end, immediately adjacent the heating element 23, the opening is large enough to receive not only the body portion of the terminal member but also the return-bent portion, and to loosely hold the same in proper operative position relatively to the heating element.

The block 37 is oblong in shape and one side thereof may have its corners rounded from top to bottom while the lower portion of the other side is provided with square corners and its upper portion with rounded corners, for a purpose to be hereinafter set forth in detail.

The top plate 24 comprises a relatively thin metal casting having a contour and outer dimensions to permit it to fit within the peripheral flange of the member 22. A plurality of depressions 29 are provided in the under surface of the top plate 24 and are so located as to co-operate with, and fit over, the lugs or bosses 25 and 26. Openings 41 are provided in the top plate and are so located as to register with the screw threaded openings 27, whereby screws 42 may be employed to press the top plate tightly against the upper surface of the heating element 23 and the heating element against the upper surface of the base plate 22. As the top plate is made relatively thin, it is provided with a longitudinally extending stiffening rib 43 and it may be provided, at its rear edge, with a laterally extending stiffening rib 44. The stiffening rib 44 may extend not only laterally of the plate 24 but may also extend in an arcuate path of such form as to define a cutout portion 45 of substantially the same contour and dimensions as the refractory terminal-supporting block 37.

The height of the stiffening rib 44 is made substantially equal to that of the refractory block 37. Adjacent the extreme rear edge of the top plate 24, the stiffening rib 44 is provided with integral overhanging portions 46, at the two ends thereof, which are adapted to co-operate with, and fit around, the upper, outer and side portions of the block 37 to securely hold the same in its proper operative position against the top of the heating element 23.

A cover member 47, of any suitable or desired contour, is located at the top of the iron and is held against the body portion, as hereinbefore described, by a single screw 48 extending through the cover and into an upwardly extending lug or boss 49 constituting a part of the longitudinally extending rib 43. A plurality of handle straps 51 have their lower ends secured against the top of the cover member 47 by rivets 52. A handle member 53 is supported between the upper ends of the handle straps 51 in any suitable or desired manner.

A refractory insulating block 54 is held against the outer or rear surface of the rear handle strap 51 and may be of any suitable or desired shape or contour but here shown as substantially rectangular in vertical and lateral cross-section.

The block 54 is provided with a slot or groove 55 extending longitudinally therethrough in the outer face thereof, the upper portion of the groove being relatively narrower than the lower or expanded portion thereof. Immediately adjacent to the lower egde of the member 54, the slot 55 is pro-

vided with a laterally extending integral wall portion 56. This construction provides two relatively narrow slots 57, immediately adjacent to the lower edge of the member 54, through which the two leads 58 and 59 of a twin conductor 61 may extend.

The outer surface of the member 54 is covered by a metal cover plate 62 which has an intermediate portion of such lateral width as to cover the block. The upper end of the member 62 extends at substantially right angles to the intermediate portion and is provided with an opening 63 and depending side flanges 64. A flexible helical spring member 64 has one end located in, and held by, the walls defining the opening 63, to prevent undue bending or kinking of the conductor 61. The lower end portion of the member 62 may be made relatively wider than the intermediate portion and may be employed either as a name plate by having a suitable marking placed directly thereon, or it may be employed as a support for a name plate secured thereto. The cover member 62 is held in its proper operative position against the rear end of the iron and against the rear face of the refractory member 54, and the member 54 is held in its proper operative position against the rear surface of the rear handle strap 51, by a plurality of screws 66 which extend through suitable openings in the cover plate and the block and have screw-threaded engagement with the handle strap 51.

The hereinbefore described construction of the slot 55 in the refractory member 54 permits of tying the two conductors 58 and 59 into a knot which may be located in the lower portion of the slot 55. Any pull on the conductor 61 is taken care of by the knot pressing against the walls of the reduced portion of the slot 55, thereby preventing the transference of the pull or strain to the extreme ends of the conductors where they are secured to the upper ends of the terminal members 33 by the screws 35.

Means for supporting the iron in a backwardly tilted position may comprise two supporting members 67, of substantially L-shape provided with a return bent outer-end portion. One end of each of the members 67 is secured to the inner surface of the rear edge portion of the cover member 47. The two members 67, together with a central stiffening rib 68 of the member 62, comprise a three-point support for the iron in its backwardly-tilted position.

The device embodying my invention is designed particularly as a so-called "traveler's iron," the weight of which is as small as possible, since it is intended that the iron shall be carried by travellers to perform ironing operations wherever electric current may be available.

The hereinbefore described construction, particularly of the base plate having an integral and peripheral stiffening flange, and of the top plate, with its integral stiffening ribs is relatively strong to withstand the service to which such irons are subjected, while, at the same time, permitting the iron to be very light in weight. The device embodying my invention comprises relatively few parts which are easily assembled and disassembled, and which are not likely to become defective during the operation or use of the device.

Various modifications in the arrangement and location of parts may be made within the spirit and scope of my invention, and such modifications are intended to be covered by the appended claims.

I claim as my invention:

1. In an electric flat iron, in combination, a base plate, a heating element thereon, a refractory insulating block on said heating element having a plurality of openings extending therethrough, a plurality of terminal members for said heating element extending through said openings, and a top plate for clamping said heating element against said base plate and for holding said insulating block in its proper operative position.

2. In an electric flat iron, in combination, a base plate, a heating element comprising a resistor member, a plurality of terminal members each having a turned-over portion clamping the ends of said resistor, a refractory insulating block surrounding said terminal members, and a top plate having embodying means for holding said insulating block in its proper operative position relatively to said heating element.

3. In an electric flat iron, in combination, a base plate, a heating element comprising a resistor member, a refractory insulating block having a plurality of openings therethrough, a plurality of terminal members for said resistor, located in and extending through said openings, a top plate having embodying means for holding said insulating block in its proper operative position, and means for securing said top plate against said base plate, said two plates having interengaging portions for preventing lateral and longitudinal movements of the plates relatively to each other.

4. In an electric flat iron, in combination, a body portion, a cover member, a handle strap, a grooved refractory block located against the handle strap, supply circuit leads extending through said grooves, a flexible spring member surrounding said supply circuit leads over a portion of their length, and a cover plate for said refractory block having embodying means for operatively engaging and holding one end of said flexible spring member.

5. In an electric flat iron, in combination,

a body portion, a cover member, a handle strap, a grooved refractory block located against the handle strap, a helical spring member having one end located adjacent the upper end of said refractory block, and a cover plate for said refractory block having embodying means for holding one end of said helical spring member.

6. In an electric flat iron, in combination, a body portion, a cover member, a handle strap, a grooved refractory block located against the handle strap, a helical spring member having one end located adjacent the upper end of said refractory block, a cover plate for said refractory block having embodying means for holding one end of said helical spring member, and means for securely clamping the cover plate against said refractory block and said refractory block against said handle strap.

In testimony whereof, I have hereunto subscribed my name this 13th day of October, 1922.

ORA A. COLBY.