(12) INTERNATIONAL APPLICATION PUBLISHED UNDER THE PATENT COOPERATION TREATY (PCT)

(19) World Intellectual Property Organization
International Bureau

(43) International Publication Date
02 November 2017 (02.11.2017)

WIPO | PCT

(10) International Publication Number
WO 2017/187282 A1

(51) International Patent Classification:
G01N 33/24 (2006.01)

(21) International Application Number:
PCT/IB2017/051598

(22) International Filing Date:
20 March 2017 (20.03.2017)

(25) Filing Language: English

(26) Publication Language: English

(30) Priority Data:
201611014379 25 April 2016 (25.04.2016) IN

(71) Applicant: **INDIAN COUNCIL OF AGRICULTURAL RESEARCH** [IN/IN]; Dr Rajendra Prasad Road, Krishi Bhavan, New Delhi 110 001 (IN).

(72) Inventors: **PATIL, S. K.**; Indira Gandhi Krishi Vishwavidyalaya, Raipur, Chattisgarh 492012 (IN). **SRIVASTAV, L. K.**; AICRP on STCR, Department of Soil Science and Agricultural Chemistry, College of Agriculture, Indira Gandhi Krishi Vishwavidyalaya, Raipur, Chattisgarh 492012 (IN). **MISHRA, V. N.**; Department of Soil Science and Agricultural Chemistry, College of Agriculture, Indira Gandhi Krishi Vishwavidyalaya, Raipur, Chattisgarh 492012 (IN). **DAS, R. O.**; Soil Science & Agricultural Chemistry, MIG 3/20, Mahaveer Nagar, Raipur, Chattisgarh 492 006 (IN). **DEY, Pradip**; All India Coordinated Project on Soil Test Crop Response (AICRP-STCR), ICAR - Indian Institute of Soil Science, Nabibagh Berasia Road, Bhopal, Madhya Pradesh 462 038 (IN). **RAO, A. Subba**; IISS, 52, Narayan Guru Vihar, Behind in front of Jesus Church, Near Vrindavan Nagar Bypass Road, Piplani PO, Bhopal, Madhya Pradesh 462 022 (IN).

(74) Agent: **KHURANA & KHURANA, ADVOCATES & IP ATTORNEYS**; E-13, UPSIDC, Site-IV, Behind-Grand

(54) Title: PORTABLE SOIL TESTING KIT FOR AGRICULTURAL AND HORTICULTURAL CROPS

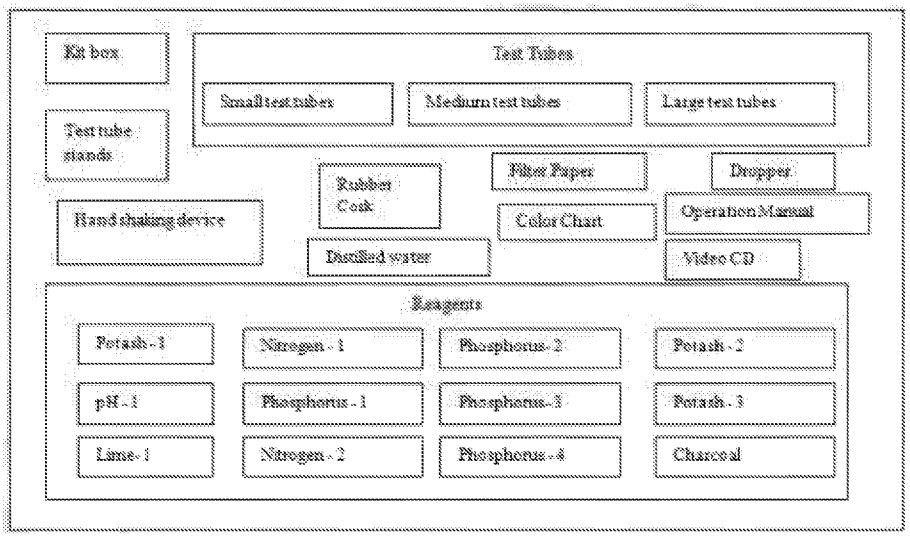

FIG. 1

(57) Abstract: The present disclosure provides a soil testing kit capable of determining nutrients level of a soil such as nitrogen content, phosphorus content, potassium content, and other soil characteristics such as pH and lime requirement of a soil at any given location in a field. The soil testing kit disclosed herein can include a portable carrying case, wherein the carrying case can include, a plurality of transparent test tubes each having an open end and a closed end; a stand configured to hold the plurality of test tubes in a substantially vertical orientation; at least one rubber stopper configured to close the open end of the plurality of test tubes; a dropper configured to deliver a quantity of a test reagent into the test tubes; a plurality of filter papers; a plurality of assessment color charts having a plurality of colored regions indicative of one or more attributes of a soil sample; a distilled water container; a charcoal container; a hand- operated shaking device configured to extract one or more nutrients from the soil sample for subsequent determination of one

WO 2017/187282 A1

[Continued on next page]

Venice, Kasna Road, Greater Noida, National Capital Region 201 310, Uttar Pradesh (IN).

(81) Designated States *(unless otherwise indicated, for every kind of national protection available)*: AE, AG, AL, AM, AO, AT, AU, AZ, BA, BB, BG, BH, BN, BR, BW, BY, BZ, CA, CH, CL, CN, CO, CR, CU, CZ, DE, DJ, DK, DM, DO, DZ, EC, EE, EG, ES, FI, GB, GD, GE, GH, GM, GT, HN, HR, HU, ID, IL, IN, IR, IS, JP, KE, KG, KH, KN, KP, KR, KW, KZ, LA, LC, LK, LR, LS, LU, LY, MA, MD, ME, MG, MK, MN, MW, MX, MY, MZ, NA, NG, NI, NO, NZ, OM, PA, PE, PG, PH, PL, PT, QA, RO, RS, RU, RW, SA, SC, SD, SE, SG, SK, SL, SM, ST, SV, SY, TH, TJ, TM, TN, TR, TT, TZ, UA, UG, US, UZ, VC, VN, ZA, ZM, ZW.

(84) Designated States *(unless otherwise indicated, for every kind of regional protection available)*: ARIPO (BW, GH, GM, KE, LR, LS, MW, MZ, NA, RW, SD, SL, ST, SZ, TZ, UG, ZM, ZW), Eurasian (AM, AZ, BY, KG, KZ, RU, TJ, TM), European (AL, AT, BE, BG, CH, CY, CZ, DE, DK, EE, ES, FI, FR, GB, GR, HR, HU, IE, IS, IT, LT, LU, LV, MC, MK, MT, NL, NO, PL, PT, RO, RS, SE, SI, SK, SM, TR), OAPI (BF, BJ, CF, CG, CI, CM, GA, GN, GQ, GW, KM, ML, MR, NE, SN, TD, TG).

Published:

— *with international search report (Art. 21(3))*

or more attributes of the soil sample; and a plurality of test reagents, each for determining one or more attributes of the soil sample according to standard methods.

PORTABLE SOIL TESTING KIT FOR AGRICULTURAL AND HORTICULTURAL CROPS

FIELD OF THE INVENTION

[0001] The present disclosure pertains to technical field of soil testing apparatus and techniques. In particular, the present disclosure pertains to a low cost portable soil testing kit for assessing soil nutrient values, soil pH and soil lime requirement.

BACKGROUND OF THE INVENTION

[0002] Background description includes information that may be useful in understanding the present invention. It is not an admission that any of the information provided herein is prior art or relevant to the presently claimed invention, or that any publication specifically or implicitly referenced is prior art.

[0003] The agricultural industry uses soil samples to determine the nutrient level of soils in fields. Soil sampling and testing provides an estimate of the capacity of soil to supply adequate nutrients to meet the needs of growing crops. Soil of a field is also analyzed for purposes of selecting a crop variety as well as analyzing application rates for fertilizer and other chemicals. Further, highest crop yields can only be achieved through the regular monitoring of soil conditions throughout the growing cycle of a crop. Accurate monitoring of soil conditions allows farmers to adjust and plan for the application of fertilizer, schedule irrigation, estimate yields, and identify problems with planting. Hence, assessment of soil nutrients and other soil characteristics are very important in agricultural production.

[0004] There have been many soil testing systems and techniques have been developed in the art for measurement of soil nutrient values such as nitrogen, phosphorus, potassium and other soli characteristics such as soil pH and soil lime requirement. However, the known soil testing systems and techniques suffer from number of disadvantages. A particular disadvantage is that the existing testing methods do not facilitate constant extraction of nutrients from soil samples for subsequent soil testing and therefore the results are not reproducible. Further, the current practice of soil analysis is to collect soil samples from a subject field and send them to a laboratory for assessment. The laboratory soil testing procedures often require collection, preparation, and analysis of soil samples, which are often expensive, time consuming, and labor

intensive. Moreover, the known methods of extraction of nutrients from soil samples for subsequent soil analyses are often complicated, labor intensive, typically involve expensive equipment, require considerable laboratory space, and normally involve use of numerous chemical reagents, thereby making the testing methods very expensive. Further, the existing extraction methods are not satisfactory because they do not facilitate extraction of multiple nutrients in one step and generally require varied reagent use for nutrient extractions.

[0005] Accordingly, there exists a need in the art for a new and improved soil testing kit that facilitates rapid on-site assessment of soil nutrients and other soil characteristics in a manner that is convenient, cost effective and provides a high degree of reliable and reproducible results. There also exists a need for simple, user friendly and inexpensive techniques for effective extraction of nutrients from soil samples for subsequent soil testing.

[0006] The present invention satisfies the existing needs, as well as others, and generally overcomes the deficiencies found in the prior art.

OBJECTS OF THE INVENTION

[0007] It is an object of the present disclosure to provide a portable soil testing kit that facilitates determination of soil nutrients and other soil characteristics on-site.

[0008] It is a further object of the present disclosure to provide a portable soil testing kit that facilitates on-site determination of availability of nutrients such as nitrogen, phosphorus and potassium in soils, and other soil characteristics such as soil pH and soil lime requirement.

[0009] It is another object of the present disclosure to provide a soil testing kit that provides highly reliable and reproducible results.

[00010] It is another object of the present disclosure to provide a soil testing kit that facilitates on-site assessment of soil nutrients and other soil characteristics in a manner that is rapid, convenient and cost effective.

[00011] It is another object of the present disclosure to provide a soil testing kit that can be effectively used by untrained farmers without using laboratory facilities or equipments.

[00012] It is another object of the present disclosure to provide a method for effective extraction of nutrients from soil samples for subsequent determination of available nutrients in soils.

[00013] It is another object of the present disclosure to provide a soil testing kit that facilitates on-site determination of soil nutrients and provides fertilizer recommendation based on the soil test results and yield targets.

[00014] It is another object of the present disclosure to provide a soil testing kit that provides fertilizer recommendation based on soil test crop response (STCR) targeted yield approach.

[00015] It is another object of the present disclosure to provide a soil testing kit that determines soil pH value on-site, and accurately identifies the quantities of lime necessary to optimize the condition of a soil.

SUMMARY OF THE INVENTION

[00016] Embodiments of the present disclosure relate to soil testing kit capable of determining nutrients level of a soil, and other soil characteristics such as pH and lime requirement of a soil at any given location in a field.

[00017] In an embodiment, the soil testing kit can include: a portable carrying case, wherein the carrying case can include,

a plurality of transparent test tubes each having an open end and a closed end;

a stand configured to hold the plurality of test tubes in a substantially vertical orientation;

at least one rubber stopper configured to close the open end of the plurality of test tubes;

a dropper configured to deliver a quantity of a test reagent into the test tubes;

a plurality of filter papers;

a plurality of assessment color charts having a plurality of colored regions indicative of one or more attributes of a soil sample;

a distilled water container;

a charcoal container;

a hand-operated shaking device configured to extract one or more nutrients from the soil sample for subsequent determination of one or more attributes of the soil sample; and

a plurality of test reagents, each for determining one or more attributes of the soil sample according to standard methods.

[00018] In an embodiment, the portable soil testing kit can include an operation manual comprising instructions for use of the soil testing kit and interpretation of results.

[00019] In another embodiment, the portable soil testing kit can include a digital compact disk for providing pictorial, visual or audio instructions for use of the soil testing kit.

[00020] According to embodiments of the present disclosure, the portable soil testing kit disclosed herein can be used for on-site determination of soil nutrients such as nitrogen content,

phosphorus content, potassium content of soil, and other soil characteristics such as soil pH and soil lime requirement.

[00021] In an embodiment, the portable soil testing kit disclosed herein can include a plurality of test reagents, each for determining one or more attributes of a soil according to standard methods, wherein the plurality of test reagents can be selected from a pH-1, a lime-1, a nitrogen-1, a nitrogen-2, a phosphorus -1, a phosphorus-2, a phosphorus-3, a phosphorus-4, potash-1, a potash-2 and a potash-3.

[00022] In an embodiment, the portable soil testing kit disclosed herein can include a hand-operated shaking device that can be triangular in shape. The hand-operated shaking device can include a triangular frame configured with a holding means for holding one or more test tubes.

[00023] In yet another embodiment, the present disclosure provides a method for on-site determination of one or more attributes of a soil sample, wherein the method can include the steps of:

collecting a soil sample from a test site;

placing the soil sample in a transparent test tube;

mixing the soil sample with one or more liquids or reagents to form a test mixture;

shaking the test mixture using a hand-operated shaking device for a time period sufficient to extract one or more nutrients from the soil sample;

filtering the test mixture to provide a filtrate;

contacting the filtrate with one or more test reagents to cause a color change; and

comparing the color of the filtrate with an assessment color chart to find a match in order to determine the one or more attributes of the soil sample.

[00024] Various objects, features, aspects and advantages of the inventive subject matter will become more apparent from the following detailed description of preferred embodiments.

BRIEF DESCRIPTION OF THE DRAWINGS

[00025] The accompanying drawings are included to provide a further understanding of the present disclosure, and are incorporated in and constitute a part of this specification. The drawings illustrate exemplary embodiments of the present disclosure and, together with the description, serve to explain the principles of the present disclosure.

[00026] FIG. 1 is a schematic diagram that shows various components that a soil testing kit may include in accordance with embodiments of the present disclosure.

[00027] FIG. 2 shows a perspective view of an exemplary embodiment of a soil testing kit in accordance with embodiments of the present disclosure.

[00028] FIG. 3A illustrates a preferred configuration of a hand-operated shaking device in accordance with embodiments of the present disclosure.

[00029] FIG. 3B illustrates cross-sectional view of the hand-operated shaking device of FIG. 3A in accordance with embodiments of the present disclosure.

[00030] FIG. 3C is perspective view of a hand-operated shaking device in accordance with embodiments of the present disclosure.

[00031] FIG. 3D shows a perspective view of an exemplary embodiment of a hand-operated shaking device in accordance with embodiments of the present disclosure.

[00032] FIG. 4 depicts an assessment color chart for use in soil testing in accordance with embodiments of the present disclosure.

DETAILED DESCRIPTION OF THE INVENTION

[00033] The following is a detailed description of embodiments of the disclosure depicted in the accompanying drawings. The embodiments are in such detail as to clearly communicate the disclosure. However, the amount of detail offered is not intended to limit the anticipated variations of embodiments; on the contrary, the intention is to cover all modifications, equivalents, and alternatives falling within the spirit and scope of the present disclosure as defined by the appended claims.

[00034] Each of the appended claims defines a separate invention, which for infringement purposes is recognized as including equivalents to the various elements or limitations specified in the claims. Depending on the context, all references below to the "invention" may in some cases refer to certain specific embodiments only. In other cases it will be recognized that references to the "invention" will refer to subject matter recited in one or more, but not necessarily all, of the claims.

[00035] Unless the context requires otherwise, throughout the specification which follow, the word “comprise” and variations thereof, such as, “comprises” and “comprising” are to be construed in an open, inclusive sense that is as “including, but not limited to.”

[00036] Reference throughout this specification to “one embodiment” or “an embodiment” means that a particular feature, structure or characteristic described in connection with the

embodiment is included in at least one embodiment. Thus, the appearances of the phrases "in one embodiment" or "in an embodiment" in various places throughout this specification are not necessarily all referring to the same embodiment. Furthermore, the particular features, structures, or characteristics may be combined in any suitable manner in one or more embodiments.

[00037] As used in this specification and the appended claims, the singular forms "a," "an," and "the" include plural referents unless the content clearly dictates otherwise. It should also be noted that the term "or" is generally employed in its sense including "and/or" unless the content clearly dictates otherwise.

[00038] In some embodiments, the numbers expressing quantities of ingredients, properties such as concentration, reaction conditions, and so forth, used to describe and claim certain embodiments of the invention are to be understood as being modified in some instances by the term "about." Accordingly, in some embodiments, the numerical parameters set forth in the written description are approximations that can vary depending upon the desired properties sought to be obtained by a particular embodiment. In some embodiments, the numerical parameters should be construed in light of the number of reported significant digits and by applying ordinary rounding techniques.

[00039] Notwithstanding that the numerical ranges and parameters setting forth the broad scope of some embodiments of the invention are approximations, the numerical values set forth in the specific examples are reported as precisely as practicable. The recitation of ranges of values herein is merely intended to serve as a shorthand method of referring individually to each separate value falling within the range. Unless otherwise indicated herein, each individual value is incorporated into the specification as if it were individually recited herein. All methods described herein can be performed in any suitable order unless otherwise indicated herein or otherwise clearly contradicted by context. The use of any and all examples, or exemplary language (e.g. "such as") provided with respect to certain embodiments herein is intended merely to better illuminate the invention and does not pose a limitation on the scope of the invention otherwise claimed. No language in the specification should be construed as indicating any non-claimed element essential to the practice of the invention.

[00040] The headings and abstract of the invention provided herein are for convenience only and do not interpret the scope or meaning of the embodiments.

[00041] The following discussion provides many example embodiments of the inventive subject matter. Although each embodiment represents a single combination of inventive elements, the

inventive subject matter is considered to include all possible combinations of the disclosed elements. Thus if one embodiment comprises elements A, B, and C, and a second embodiment comprises elements B and D, then the inventive subject matter is also considered to include other remaining combinations of A, B, C, or D, even if not explicitly disclosed.

[00042] Various terms as used herein are shown below. To the extent a term used in a claim is not defined below, it should be given the broadest definition persons in the pertinent art have given that term as reflected in printed publications and issued patents at the time of filing.

[00043] The present invention provides a soil testing kit for ascertaining soil characteristics which affect plant growth. In particular, the present disclosure provides a soil testing kit capable of determining nutrients level of a soil such as nitrogen content, phosphorus content, potassium content, and other soil characteristics such as pH and lime requirement of a soil at any given location in a field. The soil testing kit disclosed herein is compact and is portable to be comfortably carried to field sites for spot analysis.

[00044] Referring to FIG. 1 that shows various components that the soil testing kit may include in accordance with embodiments of the present disclosure. FIG. 2 shows a perspective view of an exemplary embodiment of a soil testing kit in accordance with embodiments of the present disclosure. As shown in FIG. 1, the soil testing kit of the present disclosure can include: a portable carrying case, wherein the carrying case can include,

a plurality of transparent test tubes each having an open end and a closed end;

a stand configured to hold the plurality of test tubes in a substantially vertical orientation;

at least one rubber stopper configured to close the open end of the plurality of test tubes;

a dropper configured to deliver a quantity of a test reagent into the test tubes;

a plurality of filter papers;

a plurality of assessment color charts having a plurality of colored regions indicative of one or more attributes of a soil sample;

a distilled water container;

a charcoal container;

a hand-operated shaking device configured to extract one or more nutrients from the soil sample for subsequent determination of one or more attributes of the soil sample; and

a plurality of test reagents, each for determining one or more attributes of the soil sample according to standard methods.

[00045] In an embodiment, the portable soil testing kit can include an operation manual comprising instructions for use of the soil testing kit and interpretation of results.

[00046] In another embodiment, the portable soil testing kit can include a digital compact disk for providing pictorial, visual or audio instructions for use of the soil testing kit.

[00047] In an embodiment, the portable soil testing kit disclosed herein can include a plurality of test reagents, each for determining one or more attributes of a soil according to standard methods, wherein the plurality of test reagents can be selected from a pH-1, a lime-1, a nitrogen-1, a nitrogen-2, a phosphorus -1, a phosphorus-2, a phosphorus-3, a phosphorus-4, potash-1, a potash-2 and a potash-3.

[00048] In an embodiment, the pH-1 reagent can be mixture comprising methyl orange, methyl red, bromothymol blue and phenolphthalein.

[00049] In an embodiment, the lime-1 reagent can be a mixture comprising Nitro-phenol, Tri-ethanolamine, Potassium chromate, Calcium acetate and dehydrated Calcium chloride.

[00050] In an embodiment, the Nitrogen-1 reagent can be 1N aqueous solution of potassium dichromate. The Nitrogen-2 reagent can be concentrated sulphuric acid.

[00051] In an embodiment, the Phosphorous-1 regent can be 0.5N $NaHCO_3$ solution. The Phosphorous-2 reagent can comprise concentrated sulphuric acid. The Phosphorous-3 reagent can comprise a mixture of aqueous solutions of ammonium molebdate, antimony potassium tartrate and sulphuric acid. The Phosphorous -4 reagent can be dry ascorbic acid powder.

[00052] In an embodiment, the Potash-1 reagent can be an aqueous solution of sodium acetate. The Potash-2 reagent can be a mixture comprising isopropyl alcohol and ethanol in 1:1 ratio. The Potash-3 reagent can be sodium cobalti-nitrate salt.

[00053] In an embodiment, the soil testing kit disclosed herein can include a plurality of transparent test tubes of different sizes for conducting tests on soil samples according to standard methods. In an embodiment, the soil testing kit can include two large size test tubes having: height 125mm, diameter 15mm; two medium size test tubes having: height 100mm, diameter 15mm; and one small size test tube having: height 75mm, diameter 10mm. The open end of the test tubes can be closed by a suitably sized rubber stopper.

[00054] In an embodiment, the portable soil testing kit disclosed herein can include a hand-operated shaking device that can be triangular in shape. The hand-operated shaking device can include a triangular frame configured with a holding means for holding one or more test tubes.

[00055] Referring to FIG. 3A, that illustrates a preferred configuration of a hand-operated shaking device in accordance with embodiments of the present disclosure. FIG. 3B illustrates cross-sectional view of the hand-operated shaking device of FIG. 3A. FIG. 3C is perspective view of a hand-operated shaking device in accordance with embodiments of the present disclosure. As shown in FIG. 3A, the hand-operated shaking device can preferably be triangular in shape. The triangular frame can preferably be composed of a metal rod or a metal sheet, and it can have any desired size or relative dimensions. The triangular frame can be provided with a grasping handle that can facilitate controlled manual shaking of the device. The triangular frame can further be configured with a holding means, preferably a wooden holder that can receive and house one or more test tubes. The triangle frame can have a configuration such that a former or a person can grasp the triangle in one hand and shake it in a back-and-forth motion, preferably in a horizontal direction, to extract one or more nutrients from a soil sample. An exemplary embodiment of a hand-operated shaking device is shown in FIG. 3D.

[00056] According to embodiments of the present disclosure, the hand-operated shaking device can be calibrated with a standard mechanical shaker machine used in a laboratory. Unlike the known extraction techniques, the hand-operated shaking device can be manually operated in a convenient and controlled manner, and can enable effective extraction of one or more nutrients from a soil sample for subsequent analysis, thereby providing highly reliable and reproducible results. After extracting nutrients from a test soil using the hang-operated shaking device, the resulting extract can be treated with one or more chemical reagents according to standard methods to produce a visually observable color change for colorimetric determination of one or more attributes of a soil.

[00057] In an embodiment, the soil testing kit can include a color chart for pH, nitrogen content, phosphorus content and/or potassium content, and each color chart can have a plurality of colored regions indicative of pH, nitrogen, phosphorus and potassium level of a soil, respectively. The color charts can facilitate direct visual comparison between the color of the treated soil extract and the colored regions, which can be a true representation of nutrient level of soils. For example, a dark green color may indicate high amount of nutrients in a soil whereas a lighter color may indicate nutrient deficiency in the soil. The intensity of color developed can be matched with the color charts provided with the kit and the fertility level of a soil can be accurately determined. Thus, the colorimetric method can be used to determine the availability of nutrients in soils and calculate the amount of fertilizer to be applied to bring the nutrient level to

optimum levels in order to maximize the yield of a particular crop. According to embodiments, the soil testing kit disclosed herein can provide fertilizer recommendations for different crops based on the test results as well as target yield. An exemplary assessment color chart for determination of nitrogen level in soil is shown in FIG. 4.

[00058] The carrying case can be formed of a cloth, preferably a polyester cloth, and it can be sized to accommodate all the kit components such as test tubes, teat tube stand, rubber stopper, dropper, filter papers, color charts, distilled water container, charcoal container, hand-operated shaking device, test reagents, operation manual and video compact disc. Thus, the soil testing kit can be comfortably carried to field sites for spot analysis. According to embodiments of the present disclosure, the portable soil testing kit disclosed herein can be used for on-site determination of soil nutrients such as nitrogen content, phosphorus content, potassium content of a soil, and other soil characteristics such as soil pH and soil lime requirement in a manner that is rapid, convenient and cost effective. Further, the soil testing kit disclosed herein can be effectively used by untrained farmers without using laboratory facilities or equipments.

[00059] In yet another embodiment, the present disclosure provides a method for on-site determination of one or more attributes of a soil sample using the soil testing kit of the present disclosure, wherein the method can include the steps of:

collecting a soil sample from a test site;

placing the soil sample in a transparent test tube;

mixing the soil sample with one or more liquids or reagents to form a test mixture;

shaking the test mixture using a hand-operated shaking device for a time period sufficient to extract one or more nutrients from the soil sample;

filtering the test mixture to provide a filtrate;

contacting the filtrate with one or more test reagents to cause a color change; and

comparing the color of the filtrate with an assessment color chart to find a match in order to determine the one or more attributes of the soil sample.

[00060] In an embodiment, pH of a soil sample can be determined by treating an aqueous extract of the soil with a test reagent (e.g. pH-1 reagent) to produce a color change, and comparing the resulting color with a pH color chart to find a match.

[00061] In another embodiment, nitrogen level in a soil sample can be determined (through organic carbon status of the soil) by subjecting an aqueous extract of the soil to chemical

treatment with Nitrogen-1 and Nitrogen-2 test reagents to produce a color change indicative of the presence and strength of nitrogen level in the soil.

[00062] In an embodiment, phosphorous level in a soil can be determined by subjecting an extract of the soil to chemical treatment using an ascorbic acid based reagent (Phosphorous-4 reagent) to produce a color change indicative of the presence and strength of phosphorous level in the soil.

[00063] In an embodiment, potassium level in a soil sample can be determined by directly treating an extract of the soil that comprises Potash -1 and Potash-2 with solid Na-cobalti-nitrate to produce turbidity at ambient temperature. Thus, the method does not require strict maintenance of a fixed temperature, thereby making the method more suitable for testing a soil at any given location in a field.

EXAMPLES

[00064] The present disclosure is further explained with help of following examples. However, it is to be understood that the foregoing examples are merely illustrative and are not to be taken as limitations upon the scope of the invention. Various changes and modifications to the disclosed embodiments will be apparent to those skilled in the art. Such changes and modifications may be made without departing from the scope of the invention.

Example 1: Soil testing kit for determining soil nutrient values and other soil characteristics: Table 1 shows an exemplary soil testing kit of the present disclosure and various components thereof.

Table-1

S. No.	Name of Items	Quantity	Description
1.	Kit box	01	Polyester cloth made Soil testing kit box Size 23 x17 x17 cm.
2.	Large test tube	02	15x125 mm marking at 1 ml & 2 ml & written as 1 gm & 2 gm respectively, marking at 5 ml & 10 ml & written as 5 ml and 10 ml.
3.	Medium test tube	02	15x100 mm marking at 2 ml and 5 ml
4.	Small test tube	01	10x75 mm marking at 2 ml

5.	Test tube stand	01	Three tier test tube stand made of PP for 15x125 mm test tube size total 6 holes and two holes of 10 mm dia.
6.	Rubber Cork	01	Soft rubber cork of 2 No.
7.	Dropper	01	4 inches long dropper with marking at 0.5 ml with neoprene latex make of rubber teat
8.	Filter Paper,	01 Pkt	Phosphorus free filter paper size 11 mm dia, packing in 100 No. in locked polythine.
9.	Distilled water	01	Capacity of plastic wash bottle (distilled water) 250 ml and pH of distilled water approximate 6.5
10.	Potash - 1	01	Capacity of plastic wash bottle (solution) 250 ml and it is used in potassium estimation
11.	pH - 1	01	Reagent bottle 60 ml cap with plastic dropper
12.	Lime- 1	01	Reagent bottle 60 ml cap with plastic dropper
13.	Charcoal	01	Activated P free charcoal in plastic bottle
14.	Nitrogen - 1	01	Capacity of glass bottle (solution) 60 ml with plastic dropper and it is used in nitrogen estimation
15.	Phosphorus - 1	01	Capacity of plastic wash bottle (solution) 250 ml and it is used in phosphorus estimation
16.	Nitrogen - 2	01	Capacity of glass bottle (solution) 60 ml with plastic dropper and it is used in nitrogen estimation
17.	Phosphorus 2	01	Capacity of glass bottle (solution) 60 ml with plastic dropper and it is used in phosphorus estimation
18.	Phosphorus- 3	01	Capacity of glass bottle (solution) 60 ml with plastic dropper and it is used in phosphorus estimation
19.	Phosphorus - 4	01	A small bottle containing ascorbic acid dry powder

20.	Potash - 2	01	Capacity of glass bottle (solution) 60 ml with plastic dropper and it is used in potassium estimation
21.	Potash - 3	01	Sodium cobalti-nitrite salt
22.	Color Chart	01	Color chart in foul fold
23.	Operation Manual	01	A manual method for estimation total page
24.	Video CD	01	A documentary film prepared for live demo of testing
25.	Hand shaking device	01	Portable hand shaking device fabricated with iron and wooden, Triangular shape base, overall dimension 400x400x500mm, Height 95 mm. Wooden test tube holder and cabinet 160x110x40mm. Reciprocating motion, Stroke length: 500 mm. Curvature radius - 340 mm. 110 mm length of plastic handle having grip diameter : 30 mm. Structure : MS Flat 18x3 mm. and MS round rod : 6 mm.

Example 2: Determination of soil pH (Acidity or Alkalinity) using the soil testing kit of the present disclosure:

1. Take a medium size test tube and place a funnel inside the tube. Take a filter paper disc provided in the kit and fold it at the centre to form a semicircle and then again fold at the centre to form a cone. Open it at the middle and place in the funnel. Moisten the filter paper with distilled water.
2. Transfer a soil sample up to the third mark (5 ml) in a larger test tube.
3. Add charcoal equal to about two grains of gram (chickpea).
4. Then pour 10 ml of distilled water using another test tube.
5. Close the test tube with the rubber cork and shake for 5 minutes using the hand-operated shaking device (Shake the test tube horizontally at the rate of approximately 50-60 strokes per minute).

6. Gradually pour the mixture on the filter paper placed in funnel and collect the filtrate up to the first mark (2 ml) of this test tube. Remove the funnel immediately when 2 ml (up to first mark) filtrate is collected.

7. Pour 0.6 ml of chemical from pH-1 reagent (description given below) bottle using the dropper and mix the liquid of the test tube.

8. Compare the color of the liquid with the pH color chart to find a match, to determine the pH of the soil.

[00065] Composition of pH -1 reagent: Dissolve methyl orange 0.05 gm, methyl red 0.15 gm, bromothymol blue 0.3 gm and phenolphthalein 0.35 gm in one lit 66% ethanol. Adjust pH to neutral with dilute NaOH or HCl. The pH value for 0.5 units has not been given in pH color chart. If the color of the solutions falls between two colors, then obtain the pH value by increasing or decreasing by half units.

[00066] Analysis of pH results: After pH value of the soil is determined, the suitability of soil for crop production can be found with the help of below Table-2. The pH value suitable for different crops is given in Table-3. The suitability of soil for a particular crop can be worked out with the help of this Table-3. If the value of pH falls in acidic range, the lime requirement for soil reclamation can be computed by the following method.

Table-2

Soil pH Value	Suitability Groups
>9	Harmful Alkalinity for all crops
8-9	Harmful Alkalinity for most crops
6-8	Suitable for General Crops
6-5	Harmful Acidity for most crops
<5	Harmful Acidity for all crops

Table-3

Crops	**pH Value**
Paddy	6.0 - 8.0
Wheat	6.0 - 7.5
Groundnut	5.5 – 7.5
Gram	6.0 – 7.5
Pigeon pea	6.0 – 7.5
Line seed	5.0 – 7.5
Sun-flower	6.0 – 7.5
Lentil	5.5 – 7.5
Mustard	6.0 – 7.5
Maize	5.5 – 8.0
Cotton	5.5 – 8.0
Barley	6.0 – 8.0
Sorghum	5.5 – 7.5
Soybean	6.0 – 8.0
Sugarcane	6.0 – 8.0
Cauliflower	6.0 – 7.5
Cabbage	6.0 – 7.5
Onion	6.0 – 7.5
Potato	5.0 – 7.5
Pea	6.0 – 8.0
Radish	6.0 – 8.0
Tomato	6.0 – 7.5

[00067] Determination of lime requirement of an acidic soil using the soil testing kit of the present disclosure: The properties of soil can also be improved by adjusting the pH of the highly acidic or alkaline soils. For example, acidic soils can be reclaimed with the use of lime. The lime requirement of acidic soils can be determined by a method as provided herein below:

1. Transfer soil sample into a large sized test tube up to the second mark (2 gm).

2. Pour the chemical labeled as lime-1 (description given below) up to third mark (5 ml) in the test tube.

3. Cork the test tube and shake it for two minutes using hand-operated shaking device at the rate of 80 strokes per minute and then allow it to stand for two minutes on the test tube stand.

4. Shake the test tube again for 2 minutes (by hand-operated shaking device) and filter the content into the medium sized test tube with the help of moistened (by distilled water) filter paper placed in a funnel. Collect the filtrate up to the first mark (2 ml) and then remove the funnel from the test tube.

5. Pour 0.6 ml of solution from pH-1 bottle (description given above) into the test tube using a dropper and mix the contents thoroughly.

6. Determine the pH value by comparing the color of the liquid with pH measurement chart.

7. Determine the lime requirement from Table-4 as provided herein below on the basis of pH value obtained above. The pH value for 0.5 units has not been given in the pH color chart. If the color of the solution falls between two colors, then obtain the pH value by increasing or decreasing by half units.

Table-4

pH value of the solution	Unslaked lime (quintals/acre)
4.0	80
4.5	75
5.0	70
5.5	50
6.0	30
6.5	15

[00068] Composition of Lime-1 reagent: Take Nitro-phenol 1.8 g, Tri-ethanolamine 2.5 ml, Potassium chromate 3.0 g, Calcium acetate 2.0 g and Calcium chloride (dehydrated) 53.1 g, and

dissolve these in 800 ml distilled water. Adjust the pH of the medium at 7.5 with dilute sodium hydroxide and make up the final volume up to 1000 ml with distilled water.

[00069] Method of using lime: 1. Before ploughing, broadcast a required quantity of powdered lime (slaked lime) and then plough the field. If lime is to be applied in an already ploughed field, then mix the lime into the soil by disc harrow. 2. Use lime at least 15 days before sowing the crop. The powdered lime can be more effective.

[00070] Estimation of available nitrogen through organic carbon status using the soil testing kit of the present disclosure:

1. Transfer soil sample up to the first mark (1 gm) in a large test tube.
2. Pour distilled water up to third mark (5 ml) into the tube and close with a cork. Shake well for 5 minutes (Shake the test tube horizontally with the help of hand-operated shaking device at the rate of 50-60 strokes per minute).
3. Transfer 0.5 ml of liquid from the upper portion of this mixture into a medium sized test tube using a separately provided dropper. The liquid should be transferred immediately after the mixing process.
4. Add 1 ml of Nitrogen-1 (description provided below) liquid into this content followed by 2 ml of Nitrogen-2 (description provided below) liquid. Carefully transfer this liquid along the wall of a test tube and keep rotating the tube while pouring the liquid.
5. Mix all the liquids (keep the test tube vertically straight during mixing). Place the test tube on the stand for 30 minutes.
6. Match the color developed with the Nitrogen measurement color chart (FIG. 4) to determine the value of soil nitrogen.

The below Table-5 provides ratings of alkaline KMnO4 – N with Org, carbon level.

Table-5

Rating	Org Carbon (%)	Available N level (kg/ha)
Low	<0.5	<200
Medium	0.5 – 0.75	200 – 400
High	>0.75	>400

[00071] Composition of Nitrogen-1 reagent: 1 N potassium dichromate (Dissolve 49.04 g AR grade K2Cr2O7 in 800 ml distilled water and make up the final volume up to 1000 ml. with distilled water).

[00072] Composition of Nitrogen-2 reagent: Concentrated sulphuric acid (98% pure AR/GR).

[00073] Estimation of available phosphorus using the soil testing kit of the present disclosure:

1. Transfer soil sample up to the first mark (1 gm) in the large test tube.
2. Add activated P free charcoal (equal to one grain sized of chickpea) into the test tube.
3. Pour the liquid of Phosphorus-1 (description provided below) up to the last mark (10 ml) of the test tube.
4. Close the test tube with a cork and mix the contents thoroughly by shaking for 3 minutes (Shake the test tube horizontally using the hand-operated shaking device at the rate of 50-60 strokes per minute) and allow the content to stand for 2 minutes on the stand.
5. Again mix the contents of the test tube for 2 minutes with the hand shaking device.
6. Place a funnel with filter paper in a medium sized test tube and pour the liquid obtained in step No. 5 in the funnel for filtration. Allow the liquid to collect up to 5 ml mark and immediately remove the funnel as liquid is collected up to this mark.
7. Transfer 0.6 ml of liquid from Phosphorus-2 (description provided below) bottle in the test tube and shake manually the test tube gently. Bubbles may liberate from the liquid during this process. Continue shaking the test tube by hand (keeping the test tube vertically straight). This generally takes 5 minutes time.
8. Transfer 1 ml of liquid from Phosphorus-3 (description provided below) bottle into this test tube.
9. Then transfer the chemical equal to a rye grain sized from Phosphorus-4 (description provided below) bottle and close the test tube with a cork and mix the contents thoroughly by hand.
10. Keep this test tube on the stand for 10 minutes. Match the color developed with the phosphorus measurement color chart and determine the level of soil phosphorus.

[00074] Composition of Phosphorous-1 liquid: 0.5 N $NaHCO_3$: Take 42 g sodium bicarbonate in 900 ml distilled water and adjust the pH at 8.5. Make up the final volume up to 1000 ml with distilled water.

[00075] Composition of Phosphorous -2 liquid: 5 N H_2SO_4 : Take 140 ml of concentrated sulphuric acid (98% pure , AR/GR) in 800 ml distilled water and make up the final volume up to 1000 ml with distilled water.

[00076] Composition of Phosphorous -3 liquid: Dissolve 12 g of ammonium molebdate (AR) in 250 ml of distilled water and 0.291 g of antimony potassium tartrate in 100 ml distilled water separately. Add these two solutions to 1000 ml of approx. 5 N sulphuric acid (140 ml concentrated sulphuric acid in 860 ml), mix them thoroughly and make up the volume up to 2000 ml with distilled water.

[00077] Composition of Phosphorous -4: Ascorbic acid dry chemical (AR/GR grade).

[00078] Estimation of available potassium using the soil testing kit of the present disclosure:

1. Transfer soil sample into the large test tube up to second mark (2 gm) and then transfer the liquid from Potash-1 (description provided below) up to the last mark (10 ml) in the test tube.
2. Place the funnel with a filter paper in the small sized test tube.
3. Put a cork in the large test tube and mix by shaking for 1 minute horizontally with the help of hand-operated shaking device at the rate of 50-60 strokes per minute.
4. Filter this content in small sized test tube already fitted with funnel & filter paper. As soon as liquid is collected up to the first mark in the test tube (2 ml) remove the funnel and keep it aside.
5. Transfer the chemical labeled Potash-2 (description provided below), equal to one grain size of lentil followed by hand mixing so that the chemical dissolves. Keep the test tube vertical (straight) during the process of mixing.
6. Transfer 2 ml liquid from Potash-3 (description provided below) bottle after one minute of the chemical dissolves. The process of this liquid transfer is very important and has been explained in the following steps:

    (i) Start this process 1 minute after step No. 5.

    (ii) Keep the dropper 1.0-1.5 cm above the liquid level in the test tube while transferring the liquid.

    (iii) The liquid should necessarily be transferred drop by drop. This liquid transfer should be done at the earliest. (But care should be taken to avoid continuous flow of the liquid. It should necessarily fall drop wise).

(iv) There should be formation of two distinct layers of liquid during this process. Lower layer is yellowish whereas the upper layer is colorless.

(v) Keep the test tube undisturbed on the stand for 5 minutes.

(vi) A white-yellow ring is formed at the meeting point of both liquids. Match this with the potash color chart and determine the soil potash.

(vii) A special method has to be adopted for viewing the white-yellow ring. Hold a piece of black paper in background of the test tube and turn your back towards the direction of incoming light. This helps the light to fall directly on the test tube. Put the test tube in front of your eye in such a manner that the ring approaches at the level of your eye. Match the structure of the ring in this situation with the potash color chart and determine the potash content.

[00079] Composition of Potash-1: 1 N Sodium acetate: Weigh 82.03 g anhydrous sodium acetate in 900 ml distilled water and adjust the pH at 7 by dilute acetic acid or sodium hydroxide and then make up the final volume up to 1000 ml with distilled water.

[00080] Composition of Potash-2: Alcohol mixture: Isopropyl alcohol and Ethanol in 1:1 ratio.

[00081] Composition of Potash-3: Sodium cobalti-nitrate salt.

We Claim:

1. A portable soil testing kit, comprising:

a portable carrying case, wherein the carrying case comprising,

a plurality of transparent test tubes each having an open end and a closed end;

a stand configured to hold the plurality of test tubes in a substantially vertical orientation;

at least one rubber stopper configured to close the open end of the plurality of test tubes;

a dropper configured to deliver a quantity of a test reagent into the test tubes;

a plurality of filter papers;

a plurality of assessment color charts having a plurality of colored regions indicative of one or more attributes of a soil sample;

a distilled water container;

a charcoal container;

a hand-operated shaking device configured to extract one or more nutrients from the soil sample for subsequent determination of one or more attributes of the soil sample; and

a plurality of test reagents, each for determining one or more attributes of the soil sample according to standard methods.

2. The portable soil testing kit according to claim 1, further comprising an operation manual comprising instructions for use of the soil testing kit and interpretation of results.

3. The portable soil testing kit according to claim 1, further comprising a digital compact disk for providing pictorial, visual or audio instructions for use of the soil testing kit.

4. The portable soil testing kit according to claim 1, wherein the one or more attributes of the soil sample comprise nitrogen content, phosphorus content, potassium content, soil pH value and soil lime requirement.

5. The portable soil testing kit according to claim 1, wherein the plurality of test reagents comprise a potash-1, a pH-1, a lime-1, a nitrogen-1, a phosphorus -1, a nitrogen-2, a phosphorus-2, a phosphorus-3, a phosphorus-4, a potash-1, potash-2 and a potash-3.

6. The portable soil testing kit according to claim 1, wherein the hand-operated shaking device is calibrated with a standard mechanical shaker machine used in a laboratory.

7. The portable soil testing kit according to claim 1, wherein the hand-operated shaking device is substantially triangular.

8. The portable soil testing kit according to claim 1, wherein the hand-operated shaking device comprises a triangular frame configured with a holding means for holding one or more test tubes.

9. A method for on-site determination of one or more attributes of a soil sample, comprising the steps of:

collecting a soil sample from a test site;

placing the soil sample in a transparent test tube;

mixing the soil sample with one or more liquids or reagents to form a test mixture;

shaking the test mixture using a hand-operated shaking device for a time period sufficient to extract one or more nutrients from the soil sample;

filtering the test mixture to provide a filtrate;

contacting the filtrate with one or more test reagents to cause a color change; and

comparing the color of the filtrate with an assessment color chart to find a match in order to determine the one or more attributes of the soil sample.

10. The method according to claim 9, wherein the one or more attributes of the soil comprise nitrogen content, phosphorus content, potassium content, soil pH value and soil lime requirement.

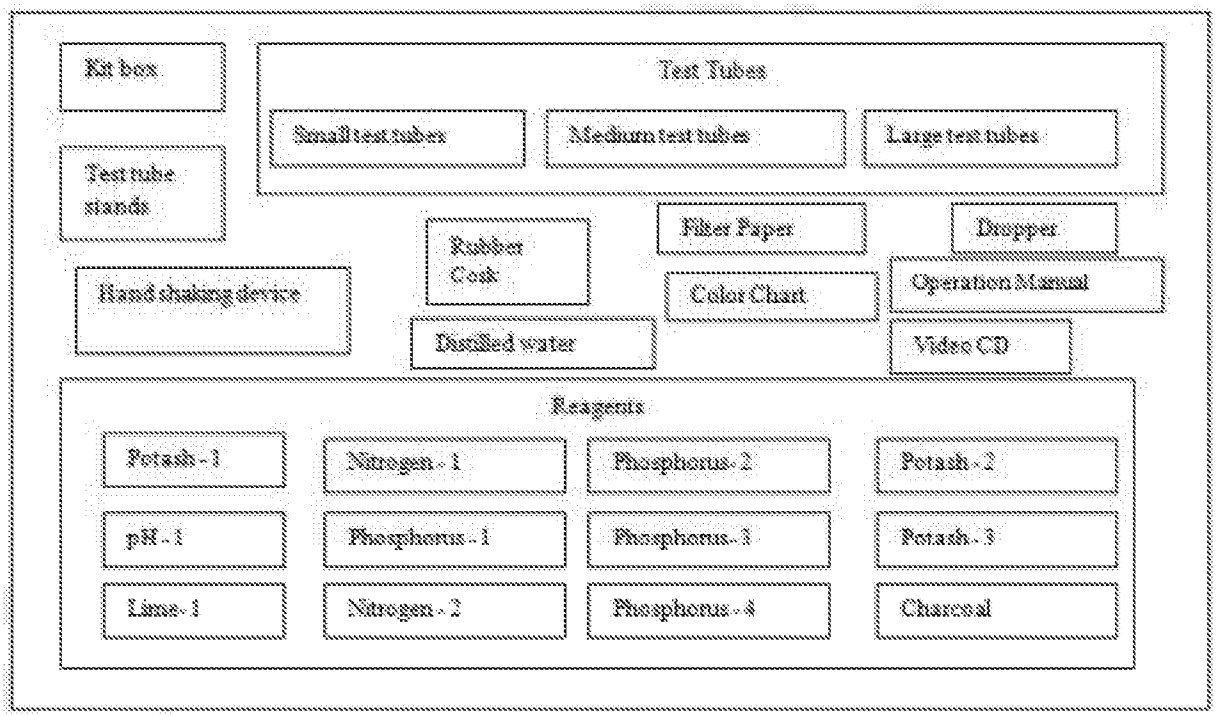
Kit box
Test Tubes
Small test tubes
Medium test tubes
Large test tubes
Test tube stands
Rubber Cork
Filter Paper
Dropper
Hand shaking device
Color Chart
Operation Manual
Distilled water
Video CD
Reagents
Potash - 1
Nitrogen - 1
Phosphorus - 2
Potash - 2
pH - 1
Phosphorus - 1
Phosphorus - 3
Potash - 3
Lime - 1
Nitrogen - 2
Phosphorus - 4
Charcoal

FIG. 1

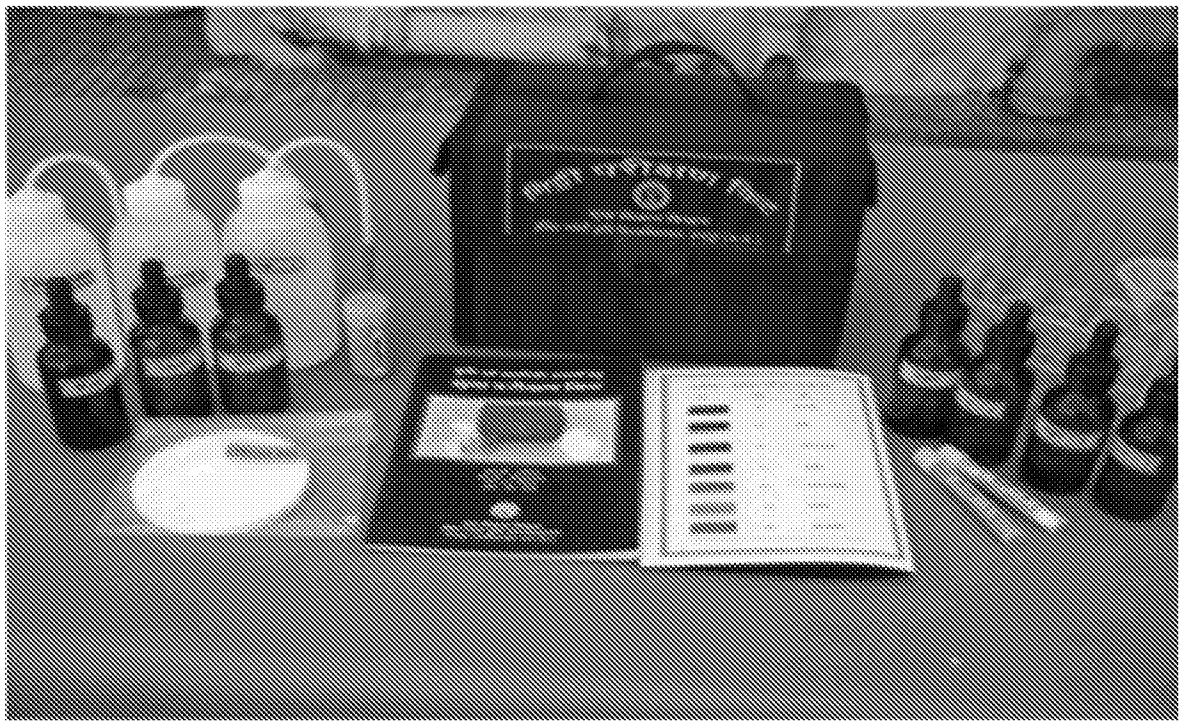

FIG. 2

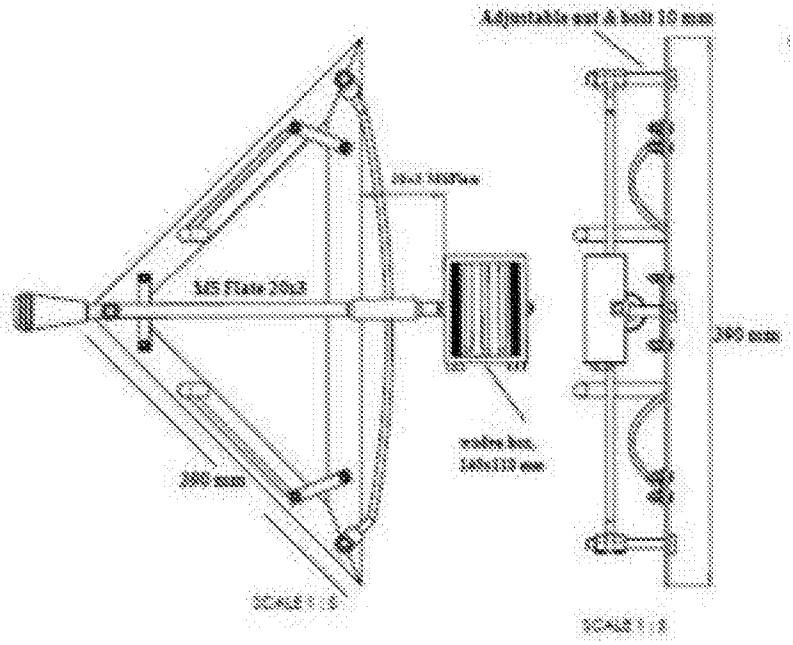

FIG. 3A

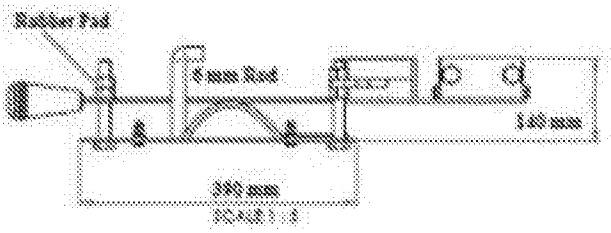

FIG. 3B

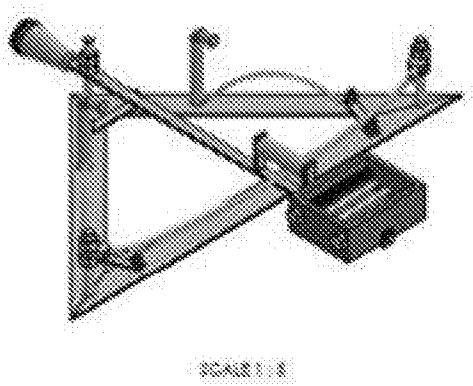

FIG. 3C

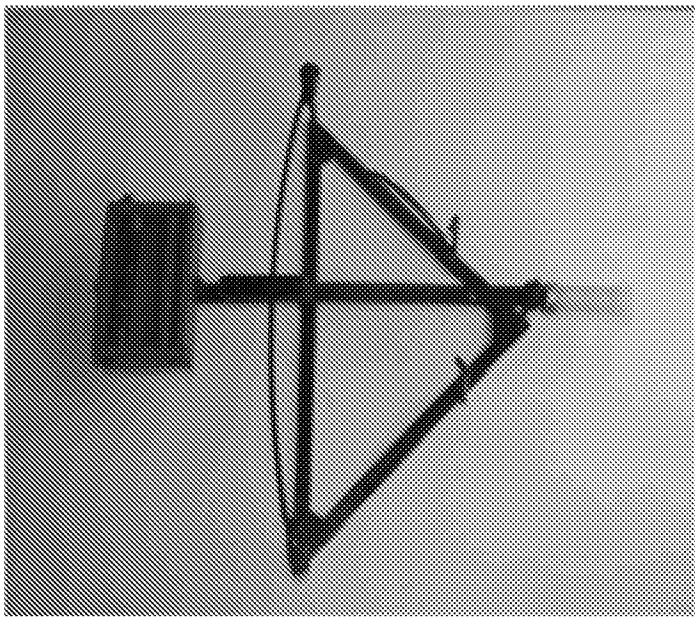

FIG. 3D

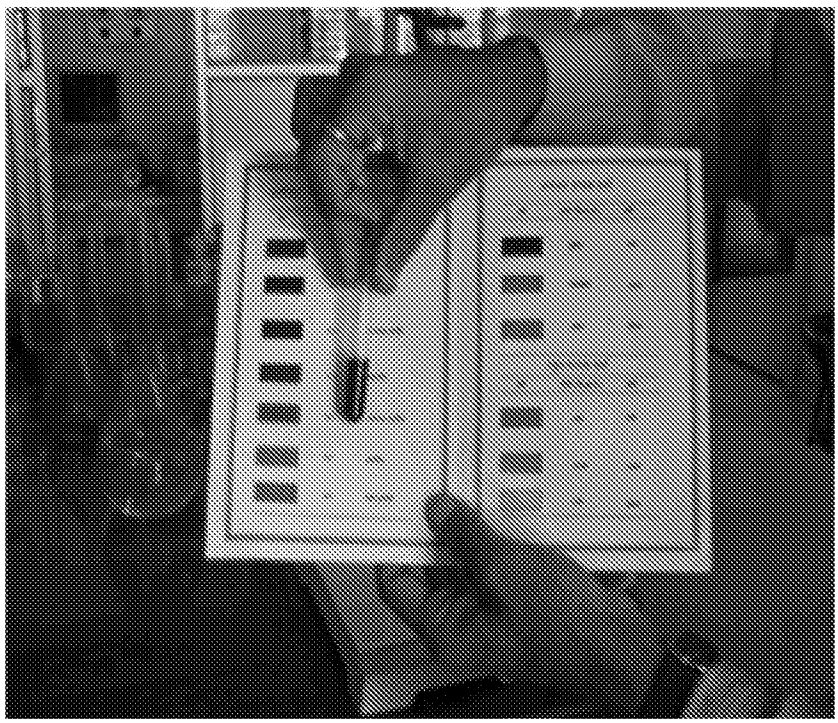

FIG. 4

INTERNATIONAL SEARCH REPORT

International application No.
PCT/IB2017/051598

A. CLASSIFICATION OF SUBJECT MATTER
G01N33/24 Version=2017.01

According to International Patent Classification (IPC) or to both national classification and IPC

B. FIELDS SEARCHED

Minimum documentation searched (classification system followed by classification symbols)

A01B, G01N

Documentation searched other than minimum documentation to the extent that such documents are included in the fields searched

Electronic data base consulted during the international search (name of data base and, where practicable, search terms used)

Databases: Patseer, IPO Internal Database
Keywords: soil test, reagents, lime, pH, tube holders, shaking device.

C. DOCUMENTS CONSIDERED TO BE RELEVANT

Category*	Citation of document, with indication, where appropriate, of the relevant passages	Relevant to claim No.
X	IN-CHE-2014-01720A (AHMED S. Riazuddin) 25 December, 2015 (25/12/2015). Page 5; line 23, page 20- line 16, page 23; lines 10-24, lines 29-30, page 3. claims 1, 2.	1-4, 9-10
Y	IN-CHE-2014-01720A (AHMED S. Riazuddin) 25 December, 2015 (25/12/2015). Page 07, 08; line 07, page 9 - line 08, page 10; line 10, page 10	5, 6-8
Y	SHOEMAKER, H. E. et al. "Buffer methods for determining lime requirement of soils with appreciable amounts of extractable aluminum." Soil Science Society of America Journal 25.4 (1961): 274-277. Whole document.	5
Y	PEECH et al. "RAPID MICROCHEMICAL SOIL TESTS." Soil Science 57.3 (1944): 167-196. Page 172.	5
Y	US 2006/0160688 A1 (NAMKOONG Kak et al.) 20 JULY, 2006 (20/07/2006). Figure 8; paragraphs [0048]-[0050].	6-8

☒ Further documents are listed in the continuation of Box C. ☒ See patent family annex.

* Special categories of cited documents:
"A" document defining the general state of the art which is not considered to be of particular relevance
"E" earlier application or patent but published on or after the international filing date
"L" document which may throw doubts on priority claim(s) or which is cited to establish the publication date of another citation or other special reason (as specified)
"O" document referring to an oral disclosure, use, exhibition or other means
"P" document published prior to the international filing date but later than the priority date claimed
"T" later document published after the international filing date or priority date and not in conflict with the application but cited to understand the principle or theory underlying the invention
"X" document of particular relevance; the claimed invention cannot be considered novel or cannot be considered to involve an inventive step when the document is taken alone
"Y" document of particular relevance; the claimed invention cannot be considered to involve an inventive step when the document is combined with one or more other such documents, such combination being obvious to a person skilled in the art
"&" document member of the same patent family

Date of the actual completion of the international search	Date of mailing of the international search report
17-07-2017	17-07-2017
Name and mailing address of the ISA/ Indian Patent Office Plot No.32, Sector 14,Dwarka,New Delhi-110075 Facsimile No.	Authorized officer Abhishek Singh Telephone No. +91-1125300200

INTERNATIONAL SEARCH REPORT

International application No.
PCT/IB2017/051598

Box No. II Observations where certain claims were found unsearchable (Continuation of item 2 of first sheet)

This international search report has not been established in respect of certain claims under Article 17(2)(a) for the following reasons:

1. ☐ Claims Nos.:
because they relate to subject matter not required to be searched by this Authority, namely:

2. ☐ Claims Nos.:
because they relate to parts of the international application that do not comply with the prescribed requirements to such an extent that no meaningful international search can be carried out, specifically:

3. ☐ Claims Nos.:
because they are dependent claims and are not drafted in accordance with the second and third sentences of Rule 6.4(a).

Box No. III Observations where unity of invention is lacking (Continuation of item 3 of first sheet)

This International Searching Authority found multiple inventions in this international application, as follows:

Claims 1-5, 9-10: The said claims are related to various technical features associated with a portable soil testing kit, reagents and method associated to the soil test.

Claims 6-8: The said claims are related to the hand-operated shaking device wherein the limited features of the said device are mentioned.

1. ☐ As all required additional search fees were timely paid by the applicant, this international search report covers all searchable claims.

2. ☒ As all searchable claims could be searched without effort justifying additional fees, this Authority did not invite payment of additional fees.

3. ☐ As only some of the required additional search fees were timely paid by the applicant, this international search report covers only those claims for which fees were paid, specifically claims Nos.:

4. ☐ No required additional search fees were timely paid by the applicant. Consequently, this international search report is restricted to the invention first mentioned in the claims; it is covered by claims Nos.:

Remark on Protest

☐ The additional search fees were accompanied by the applicant's protest and, where applicable, the payment of a protest fee.

☐ The additional search fees were accompanied by the applicant's protest but the applicable protest fee was not paid within the time limit specified in the invitation.

☐ No protest accompanied the payment of additional search fees.

International application No.
PCT/IB2017/051598

Continuation of Observations where unity of invention is lacking(Box III)

The said two different sets of claims represent two different inventions wherein first set of claims is associated with the various technical features related to a portable soil testing kit, reagents and method associated to the said soil test. On the other hand the second set of claims stands for altogether an allegedly new device introduced for effective soil shaking. The said two sets of claims therefore belong to two different inventions.

International application No.
PCT/IB2017/051598

Citation	Pub.Date	Family	Pub.Date
US 2006160688 A1	20-07-2006	DE 602005019380 D1	01-04-2010
		EP 1681098 B1	17-02-2010
		US 7645223 B2	12-01-2010
		CN 100469455 C	18-03-2009
		TW I276467 B	21-03-2007
		KR 100624458 B1	19-09-2006
		JP 2006198614 A	30-08-2006