United States Patent [19]

Ray

[11] **3,844,750**

[45] **Oct. 29, 1974**

[54] **DUST COLLECTOR BAG MOUNTING ARRANGEMENT**

[75] Inventor: **Frank M. Ray,** Hoffman Estates, Ill.

[73] Assignee: **Flex-Kleen Corporation,** Chicago, Ill.

[22] Filed: **Mar. 28, 1973**

[21] Appl. No.: **345,651**

[52] **U.S. Cl.** **55/379,** 55/302, 55/DIG. 26

[51] **Int. Cl.** **B01d 46/04**

[58] **Field of Search** ..... 55/302, 341, 374, 378, 55/379, 505, 506, 508, 507, DIG. 26, DIG. 33, DIG. 35; 285/313, 251; 210/463, 483

[56] **References Cited**

UNITED STATES PATENTS

1,414,575	5/1922	McCart	55/DIG. 26
2,145,047	1/1939	Goldkamp	55/379
2,576,332	11/1951	Derck	55/DIG. 26
3,413,020	11/1968	Johns	285/211
3,538,687	11/1970	Pausch	55/302
3,765,152	10/1973	Pausch	55/341

Primary Examiner—Frank W. Lutter
Assistant Examiner—David L. Lacey
Attorney, Agent, or Firm—J. Patrick Cagney

[57] **ABSTRACT**

A dust collector bag cup mounting arrangement employs a helical coil externally secured upon the bag cage for threaded cooperation with an internal thread surface on a collar carried by the tube sheet. The sleeve-shaped open end portion of a filter bag extends in air tight relation between the helical coil and the internal thread surface to provide an arrangement which achieves a more effective seal in that it is compatible with the operating environment and resistant to vibration while accommodating greater manufacturing tolerances and reducing manufacturing costs.

20 Claims, 10 Drawing Figures

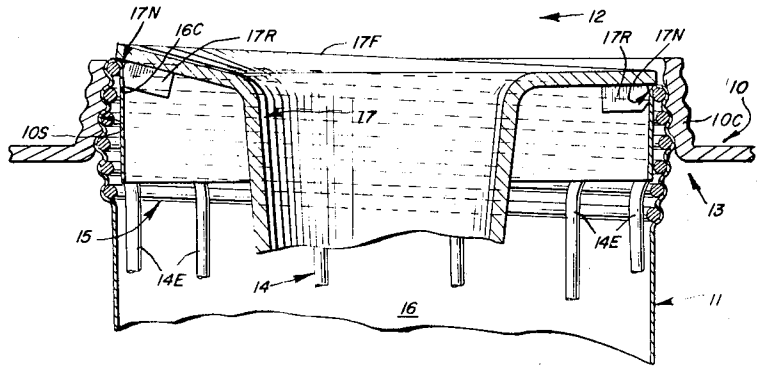

FIG. 1

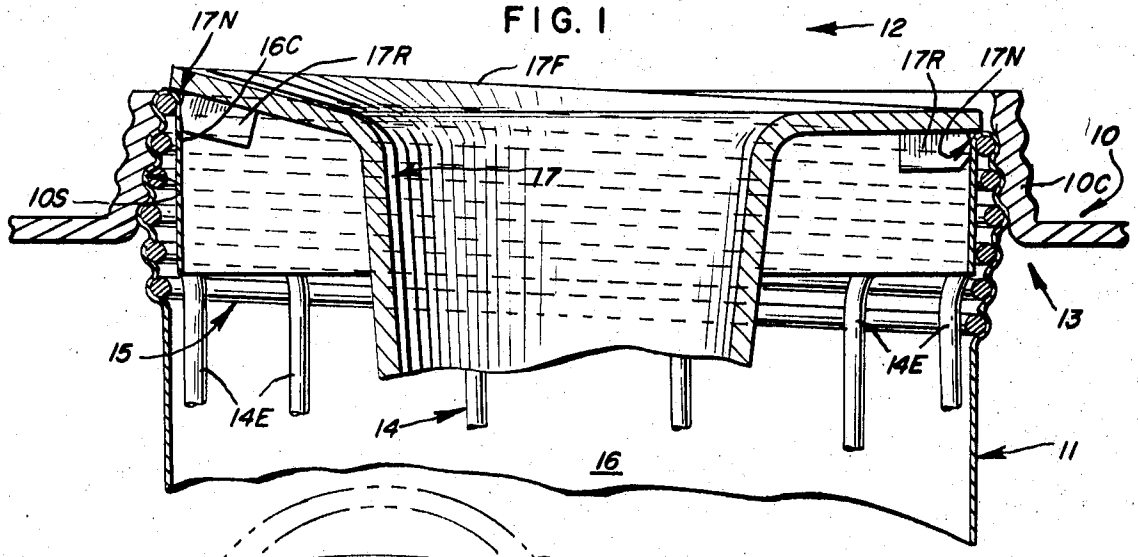

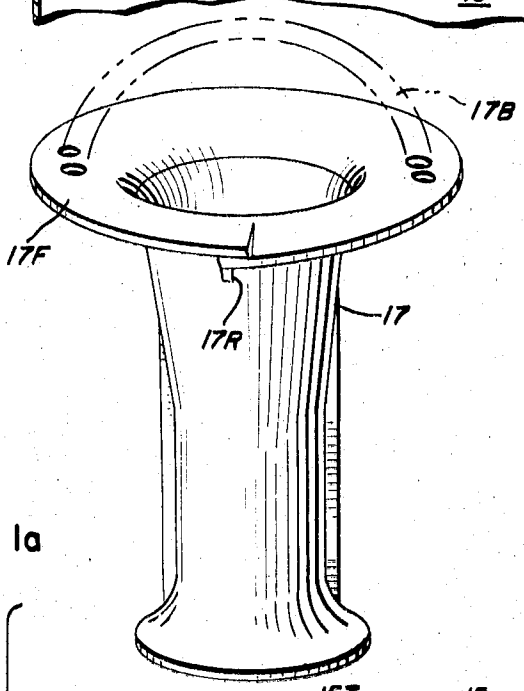

FIG. 1a

FIG. 3

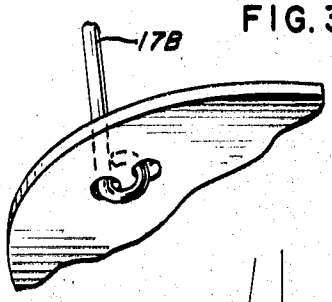

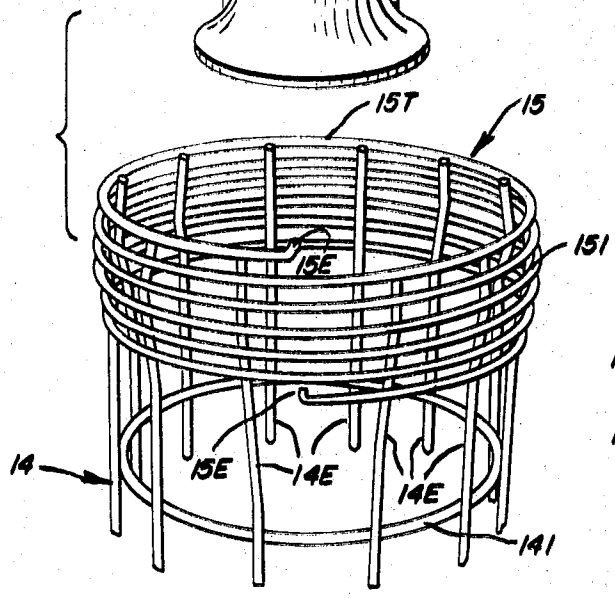

FIG. 2

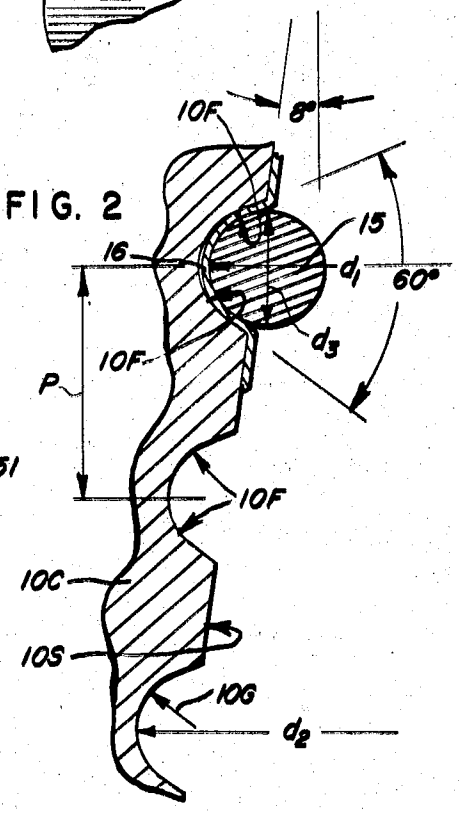

FIG. 4

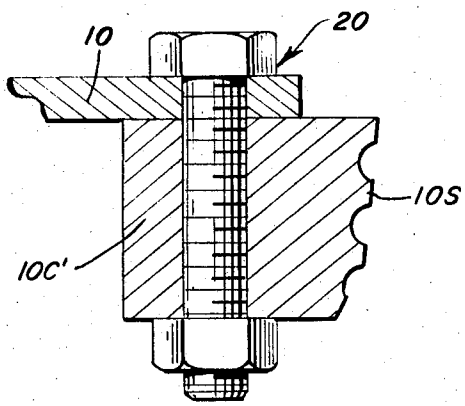

FIG. 5

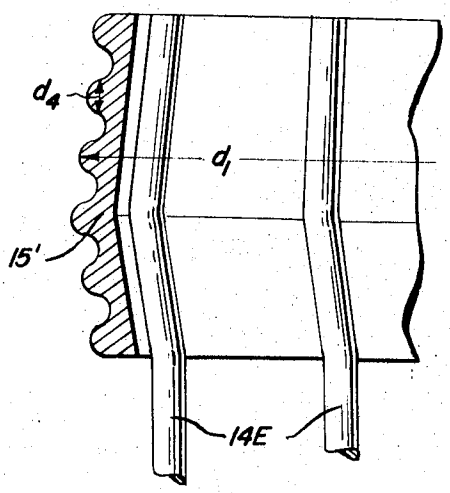

FIG. 6

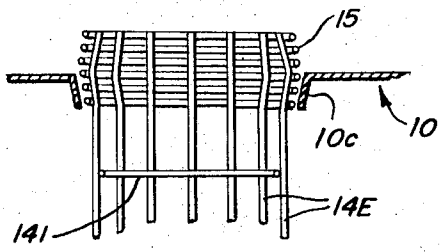

FIG. 7

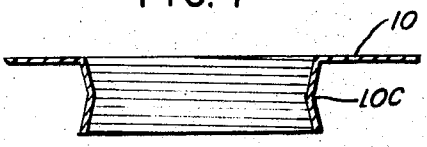

FIG. 8

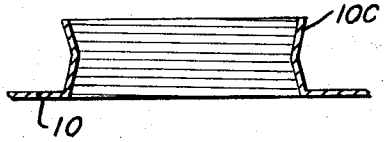

FIG. 9

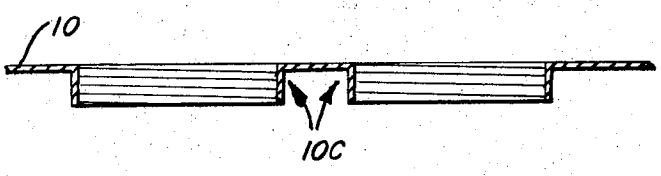

DUST COLLECTOR BAG MOUNTING ARRANGEMENT

BACKGROUND OF THE INVENTION

In dust collectors (for example, of the pulse jet reverse flow cleaning type), a large number of sleeve type filter bags are suspended from a tube sheet, each bag being suspended by a separate bag cup individually secured in air sealed relation to the tube sheet. In the pulse jet type of dust collector each bag cup is fitted with an air nozzle which is also to be air sealed relative to the bag cup and the tube sheet. A bag cage is supported from the bag cup. The filter bag surrounds the bag cage and has an open end sleeve portion which may be sealed to the bag cup by means of clamps or which may be mechanically clamped between the end of the cage and the bag cup.

In some instances, such dust collectors may incorporate as many as **500** filter bag units, each having a bag cup and air nozzle assembly to be individually sealed to the main tube sheet structure. One of the most time-consuming and expensive fabrication operations in the manufacture of dust collectors arises in connection with the mounting of each bag cup assembly in air sealed relation to the tube sheet. In addition to the assembly problems associated with manufacture, there are problems involving replacement of the filter bags in the case of these prior art arrangements. Other features which have presented problems in the prior art devices include the difficulty of maintaining an adequate seal, particularly under vibration conditions and under conditions where the gas or particulate media being handled present an environment that cuases chemical attack on rubber seals or that is of such high temperature as to cause degrading of the seal. The variety of applications have required that the prior art seal arrangements be of specialized design. Stocking problems are unduly multiplied in order to afford compatibility of material with the environmental conditions.

SUMMARY OF THE INVENTION

The present invention seeks to eliminate the problems described above by providing an arrangement that is less expensive to manufacture, easier to maintain and requires less parts, while improving the sealing action and assuring compatibility with the environment, all without requiring excessive stocking of components.

In accordance with the present invention, dust collectors are provided with an improved bag mounting arrangement wherein the tube sheet includes a collar bordering and defining each separate mounting opening therein, each collar having an internal surface presenting an internal helical thread, wherein the cage carries a mating helical thread member secured externally arount its open end portion for threaded cooperation with the internal helical thread of the collar in supporting the cage and wherein the bag extends in air tight relation between the collar and the mating helical thread member. In this arrangement sealing is achieved completely by the bag which is comprised of a material matched to the environmental needs of the application so that chemical and temperature effects on the sealing are avoided.

The helical thread member is slightly larger in major thread diameter than the cage and is sized to afford a snug fit with the bag at the sealing area to eliminate the tendency of wrinkling of the seal while the remainder of the bag is slack relative to the cage to facilitate application of the bag upon the cage.

In the presently preferred embodiment the internal helical thread of the collar is tapered and the helical thread member is in the form of a coil that is double tapered in that it has an intermediate portion of maximum fixed diameter and tapers inwardly toward each end so that the same construction can be used in both top removal and bottom removal type dust collectors. The taper of the collar and the coil allows greater manufacturing tolerances as between the coil size and the collar size and allows the same structure to be used with bags of various thicknesses.

In the pulse jet type dust collector to which the invention is particularly directed, an air nozzle member (preferably a venturi nozzle) is mounted in snap fit relation within the open end of the cage. The end portion of the bag is provided with a reverse bend or bag cuff which is gripped between the interior of the cage and the nozzle member to effect sealing at that area. More particularly, the nozzle member is provided with circumferentially spaced peripheral notches that engage the end turn of the coil with the bag cuff therebetween to complete a mechanical interlock and provide air tight sealed relationship between these parts.

A number of modifications in the collar and helical thread member arrangement are disclosed to illustrate additional embodiments of the invention.

Other features and advantages of the invention will be apparent from the following description and claims and are illustrated in the accompanying drawings which show structure embodying preferred features of the present invention and the principles thereof, and what is now considered to be the best mode in which to apply these principles.

DESCRIPTION OF THE DRAWINGS

FIG. **1** is a vertical section illustrating a bag mounting arrangement in accordance with this invention as applied to a pulse jet type collector;

FIG. **1A** is an exploded perspective view better illustrating the arrangement of the top of the bag cage and the venturi nozzle;

FIG. **2** is an enlarged fragmentary detailed view of the sealing relationship of the bag between the mating threads on the tube sheet collar and the cage support coil;

FIG. **3** is a fragmentary perspective view of a bail type handle for the venturi nozzle;

FIG. **4** is a fragmentary vertical sectional view illustrating an alternative tube sheet collar arrangement;

FIG. **5** is a view of a helical thread sleeve for use in place of the cage support coil;

FIGS. **6, 7** and **8** are diagrams illustrating alternative bag mounting arrangements; and

FIG. **9** is a vertical sectional view illustrating another embodiment utilizing a straight collar thread. Definitions;

Major thread diameter

is the diameter to the outside region of the helix defined by the thread surface

as applied to the helical thread means **15** (or **15'** in FIG. **5**) it is represented by the dimension line d_1 in FIGS. **2** and **5**

as applied to the internal helical thread of the collar **10C** it is represented by the dimension line d_2 in FIG. **2**

Local thread ridge - is the width of the thread ridge of the helical thread means **15, 15'**

as applied to the wire coil **15,** it is represented by the dimension line d_3 in FIG. **2**

as applied to the sleeve **15',** it is represented by the dimension line d_4 in FIG. **5.**

DESCRIPTION OF PREFERRED EMBODIMENT

Referring now to the drawings and particularly to FIG. **1,** a portion of a perforated tube sheet designated generally at **10** has a separate mounting opening for each bag unit **11** only one of which is shown in the drawing. The region, indicated at **12,** above the tube sheet **10** is the clean air plenum and the region, indicated at **13,** below the tube sheet **10** is the entrance plenum.

In the preferred embodiment, each bag mounting arrangement utilizes a collar **10C** having an internal surface **10S** leading from the plane of the tube sheet and defining an internal helical thread of single taper, a conventional wire cage **14** consisting of a set of internal wire rings **14I** interconnected by a set of circumferentially spaced lengthwise extending external wire rods **14E,** a helical threaded member in the form of a coil **15** secured externally on the cage for threaded cooperation with the collar thread and a bag **16** extending in sealing relation between the collar thread and the helical coil **15** and having a reverse bend portion **16C** defining a bag cuff that projects into the open axial outlet of the cage **14.**

In the case of a pulse jet type dust collector which is illustrated herein for purposes of specific disclosure, a gas nozzle member **17,** here represented as being a venturi type, is mounted in snap-fit clamping relation within the open end of the cage to engage the bag cuff **16C** between the cage **14** and the venturi nozzle member.

Generally, in the prior art, the bag cages **14** used a peripheral gap or recess near the top to facilitate reception of a bag clamping ring which is accessible from only one side of the tube sheet. The present cage and bag mounting arrangement may be identical for both top removal and bottom removal types of dust collectors. The helical coil **15** which is shown as consisting of substantially six complete turns, is of the same material as the cage **14** and may be of the same or of larger or smaller gauge than the wire rod material that constitutes the cage. The coil **15** is spot welded to the cage at spaced locations and has its opposite ends **15E** bent inwardly of the periphery of the cage to prevent snagging with the bag.

It will be noted that the lengthwise cage rods **14E** have outwardly offset bent portions intermediately of their upper ends to present a profile that matches the internal profile of the coil **15** to facilitate spot welding of the coil to the cage. The upper ends of the cage rods **14E** terminate at the points of juncture with the end turn of the coil **15** to define a helical end profile for the cage. Correspondingly, the venturi nozzle **17** has a helically profiled top flange **17F** to achieve full length snug seating of the venturi flange on the end of the cage.

In the illustrated arrangement, the venturi nozzle **17** is shown with a set of circumferentially spaced ribs **17R** having notches **17N** to cooperate with the top end turn **15T** of the coil to clamp the bag cuff **16C** in mechanically interlocked sealed relationship between these parts.

For the pulse jet type arrangement shown in FIG. **1,** the bag **16** is applied to the cage **14** and the venturi **17** is mounted in snap fit relation as shown and the entire assembly then is threaded into the tube sheet from the bottom. Since the invention also contemplates a top removal type dust collector (see FIG. **6**), the venturi **17** may be equipped with a hinged bail **17B** which is shown in elevated position in FIG. 1A wherein it may serve as a handle for applying torque either to install or remove the unit. When installed, the bail **17B** is swung out of the path of the air stream. Since the assembly of the venturi nozzle **17,** the cage **14** and the bag **16** is carried out first, the bag cuff **16C** is easy to secure even if it is as short as one-half inch, thus providing some saving on bag material.

The coil **15** being on the outside of the cage presents the largest diameter region and is sized relative to the bag to provide a snug fit for the bag at the region of the coil so that any tendency for the bag material to wrinkle is eliminated.

In the preferred arrangement illustrated in FIG. **1** for purposes of disclosure, each collar portion **10C** is an integral, upwardly converging extension of the tube sheet and, being extruded from the tube sheet stock, is of slightly less thickness than the tube sheet **10.** The illustrated collar **10C** is provided with a knuckle thread to cooperate with the wire coil **15.**

In the preferred embodiment illustrated in FIG. **1,** the collar projects upwardly from the plane of the tube sheet and the knuckle thread on the interior surface of the collar **10C** is a downwardly flaring helical thread of uniform pitch and and wire coil **15** is shown with its intermediate turn **15I** being of larger major thread diameter than its end turns to defing a double tapered coil. The three-turn end sections of the coil **15** are matched in size and pitch so that the coil is reversible. As is explained hereinafter, the double tapered coil **15** may be threaded into the collar **10C** either from the top or the bottom depending upon the arrangement of the collar. Independently of the double taper concept there is advantage in providing a tapered profile for both the collar and the coil in order to accommodate greater manufacturing tolerances between these parts and in order to adapt the parts for use with bags of various thicknesses.

The double tapered coil arrangement is normally sized so that the bag seal is achieved as the helical coil and bag seal in the knuckle thread as shown in FIG. **1.** Thus, the coil is intended to come to a stop when the mating threads seal the bag material. Even so, the arrangement allows a cage, that is installed from the bottom (see FIG. **1**), to be removed from the top. For example, where a cage has been inserted from the bottom, it may be removed from the top by first screwing the cage and coil downwardly sufficiently to allow the bag to be freed and withdrawn. There is then sufficient clearance to allow the cage and coil to be removed through the top.

The threaded arrangement of this invention wherein the bag material itself serves as the primary seal requires a coil of at least one turn. In the illustrated arrangement each end section of the coil **15** presents substantially three turns to enable one element to be used either with top or bottom removal type collectors while

still insuring sealing. Two of the active turns normally act as a seal and the third is provided to accommodate bag thickness tolerance. The present arrangement wherein the bag material acts as the seal is made wrinkle free at the sealing region in that the bag is snugly sized to the coil diameter so that the remainder of the bag is slightly slack relative to the cage. This slack relationship makes it easy to apply the bag over the cage. Since the bag material is selected to be compatible with the internal environment in the particular collector, the bag seal inherently resists chemical attack problems and/or high temperature problems such as plague the rubber seals that have been used in some varieties of prior art. The standard wire cage construction that has previously been used is particularly suitable to the coil and threaded mounting arrangements of this invention because the cage wire is capable of distorting slightly to accommodate tolerance variations or out of roundness such as sometimes occur either during manufacture or from damage during use. Such minor defects will not impair the threaded sealing relationship.

For purposes of detailed disclosure, a particular embodiment utilizes threads having an 8° angle of taper and having a pitch of three threads per inch. The coil is of one-eighth inch diameter wire, this presently being optimum for strength and for compatibility with existing cage designs which employ one-eighth inch wire stock. This relatively close thread spacing achieves the optimum number of engaged threads, preferably three full turns to prevent any tendency of the cage to cock relative to the collar and to insure a long enough bag seal region between the cage and collar. The values given here permit use of bags of different thickness without significant variation in the axial position of the cage relative to the collar. The definiteness of the axial position is important for assuring proper pulse jet cleaning action. Typically, if the bag fabric has a thickness of one-sixteenth inch uncompressed, it will have a thickness of one thirty-second when compressed in sealing relationship. For a tube sheet of **10** gauge stock the extruded collar may be drawn to a length of 1 1/4 inch to utilize a double tapered knuckle thread, each section of which is in excess of one half inch in length to accommodate approximately two coil turns in active sealing relation. For one eighth inch diameter wire coil stock, the knuckle groove **10G** of the collar is of one sixteenth inch radius while the inter-groove thread surface **10S** is flat to insure adequate clearance for the vertical cage rods **14E** when the coil wire is recessed in the knuckle grooves. In this relationship as shown in FIG. **2,** where the knuckle grooves span a 60° angle. the primary seal is effected by compressing the bag **16** against the side faces **10F** of the groove to develop an axial lock. The bag is held stretched against the flat knuckle surface **10S** to effect a secondary seal relative to potential leakage along the helical path defined by this flat inter-groove surface. The term pitch or pitch spacing as used herein refers to the distance represented by the dimension line P in FIG. **2.**

For the described arrangement with one eighth inch wire the nominal wire pitch of three turns per inch insures proper bag sealing between the cooperating thread structures and provides sufficient seal length while controlling axial position. If the pitch spacing were substantially less, it would be difficult to achieve proper knuckle engagement and therefore it would be difficult to achieve positive sealing. If the pitch spacing were substantially greater, the number of sealing turns would be reduced to lose the sealing action and to lose the axial positioning accuracy.

In the case where the gas or particulates present a corrosive environment, the arrangement is well suited to eliminate such problems by coating the cage wires with epoxy. The threaded mounting arrangement of this invention accommodates epoxy coated cages without likelihood of damage to the coating, whereas the clamp type mountings of the prior art excessively distort the cage and cause localized cracking of the epoxy coating leading to short cage life.

A number of modified arrangements of the invention are illustrated in FIGS. **4** through **9.** For example, in FIG. **4** a bottom removal arrangement is shown wherein the collar **10C** is separate of and beneath the tube sheet **10** and is secured by a bolt and nut fastener assembly **20.** The collar **10C** has a machine formed knuckle thread surface **10S** of the same taper and sizing relationships described previously. In FIG. **5** the helical thread means **15** is shown as a hollow sleeve construction similar to that of a lamp bulb base. The threaded sleeve **15** is shown as having its intermediate region of maximum major thread diameter and as having a tape and pitch spacing comprable to that previously described in connection with the coil **15.** The vertical legs **14E** of the cage are again shown with a bent profile like that of the sleeve **15;** however, in this instance, the ends of the legs **14E** terminate in a common horizontal plane at the upper extremity of the sleeve **15.**

An alternative arrangement is shown in FIG. **6** wherein the construction is essentially identical to that of FIG. **1** except that the tube sheet **10** has its collar **10C** projecting downwardly. It will be apparent that the double tapered coil **15** is suitable for use either with the upward collar shown in FIG. **1** or with the downward collar as shown in FIG. **6.** Actually, the same tube sheet may be used for FIGS. **1** and **6.** For convenience in disclosure the bag is omitted in the FIG. **6** illustration.

As shown in FIG. **7,** a double tapered collar **10C** formed integrally with the tube sheet **10** extends downwardly from the tube sheet whereas in FIG. **8** the double tapered collar **10C** is shown projecting upwardly from the tube sheet. Thus, the same tube sheet may serve for application either as shown in FIG. **7** or in FIG. **8.** In each of these arrangements the double tapered collar has a threaded configuration, taper and pitch spacing and major thread diameter corresponding to that previously described. Each of the double tapered collar arrangements of FIGS. **7** and **8** can accommodate either a top removal or bottom removal arrangement and the same coil configuration may be used with either arrangement thus minimizing inventory requirements.

Finally, as shown in FIG. **9,** a tube sheet **10** may employ a straight collar having a straight helical thread to cooperate with the tapered coil arrangement previously described, a pair of such collars each being designated **10C.** Straight collars provide less effective sealing length but straight collars facilitate removing a coil assembly from the top even if it were inserted from the bottom and vice versa.

Thus, while preferred constructional features of the invention are embodied in the structure illustrated herein, it is to be understood that changes and variations may be made by those skilled in the art without

departing from the spirit and scope of the appended claims.

What is claimed is:

1. In a dust collector that includes a tube sheet having a separate mounting opening for each dust collector bag unit, each bag unit including a bag cage having one end portion terminating in an axial outlet and a bag having an open end sleeve portion closely surrounding said end portion of the cage, an improved bag mounting arrangement wherein said tube sheet carries a collar bordering said mounting opening, said collar having an internal surface leading from said tube sheet and defining an internal helical thread, wherein said cage carries helical thread means secured externally around said end portion thereof for threaded cooperation with the internal helical thread of the collar to support said cage, said cage has a main length portion of smaller diameter than helical thread means, and wherein said bag is of a size to fit in snug relation over said helical thread means to extend in air-tight relation between said internal helical thread and said helical thread means, and to extend in slack relation over the main length portion of the cage.

2. In an arrangement as defined in claim **1** wherein the internal helical thread on said collar and said helical thread means define cooperating multi-turn tapered thread surfaces that are of corresponding taper and of substantially equal and uniform pitch and that have a major thread diameter clearance relationship to provide an axially interlocked relation therebetween in effecting compression of said bag.

3. In an arrangement as defined in claim **1** wherein the internal helical thread on said collar and said helical thread means define cooperating multi-turn thread surfaces each having a taper of about 8°, said helical thread means having a sufficiently smaller major thread diameter than said internal helical thread on said collar to provide an axially interlocked relation therebetween in effecting compression of said bag.

4. In an arrangement as defined in claim **1** and wherein said helical thread means has an intermediate portion of maximum major thread diameter and has end sections tapering inwardly from said intermediate portion towards each end.

5. In an arrangement as defined in claim **1** and wherein said collar is integral with said tube sheet.

6. In an arrangement as defined in claim **1** wherein the internal thread on said collar defines a tapered helical thread, and wherein said helical thread means has an intermediate portion of maximum major thread diameter and has end sections tapering inwardly from said intermediate portion towards each end, each end section corresponding in pitch and taper to said tapered helical thread.

7. In an arrangement as defined in claim **1** wherein said collar defines an internal helical thread having an intermediate portion of maximum major thread diameter and having end portions of multi-turn inwardly tapering configuration and wherein said helical thread means defines a multi-turn thread surface of corresponding taper and of sufficiently smaller major thread diameter to provide an axially interlocked relation therebetween in effecting compression of said bag.

8. In an arrangement as defined in claim **1** wherein said cage has lengthwise rods extending through said helical thread means and having outwardly offset bend portions presenting a profile matching the internal profile of said helical thread means and a gas nozzle member disposed within said end portion of the cage in snap fit relation to said helical thread means.

9. In an arrangement as defined in claim **1** wherein the open end sleeve portion of said bag includes a reverse bend end cuff portion projecting axially into said end portion of the cage and a gas nozzle member disposed in snap fit relation within said end portion of the cage to clamp said bag cuff portion in place.

10. In an arrangement as defined in claim **1** wherein the open end sleeve portion of said bag includes a reverse bend end cuff portion projecting axially into said end portion of the cage and a gas nozzle member having circumferentially spaced fins having outwardly opening notches, said nozzle member being disposed in said end portion of the cage with said notches of said fins in mechanically interlocked snap fit relation thereto to clamp the bag cuff portion in place.

11. In an arrangement as defined in claim **1** wherein said helical thread means comprises a helical wire coil.

12. In an arrangement as defined in claim **1** wherein said cage has lengthwise rods extending through said coil and having outwardly offset bend portions presenting a profile matching the internal profile of said helical thread means, said rods terminating on the end turn of said helical wire coil and a gas nozzle member disposed within said end portion of the cage, said gas nozzle member disposed within said end portion of the cage, said gas nozzle member having a peripheral helical flange mating with said end turn and having circumferentially spaced fins provided with outwardly opening notches for mechanical interlocking relationship with said end turn.

13. In a dust collector that includes a tube sheet having a separate mounting opening for each dust collector bag unit, each bag unit including a bag cage having one end portion terminating in an axial outlet and a bag having an open end sleeve portion closely surrounding said end portion of the cage, an improved bag mounting arrangement wherein said tube sheet carries a collar bordering said mounting opening, said collar having an internal surface leading from said tube sheet, and defining an internal helical thread, wherein said cage carries helical thread means secured externally around said end portion thereof for threaded cooperation with the internal helical thread of the collar to support said cage, said internal helical thread on said collar and said helical thread means defining cooperating multi-turn tapered thread surfaces, said tapered thread surfaces being of corresponding taper and of substantially equal and uniform pitch, and wherein said bag extends in air-tight relation between said internal helical htread and said helical thread means, said helical thread means having a sufficiently smaller major thread diameter than said internal helical thread on said collar to effect compression of said bag and provide an axially interlocked relation therebetween.

14. In an arrangement as defined in claim **13** wherein each of said helical thread means and said internal helical thread have a taper of about 8°.

15. In an arrangement as defined in claim **13** and wherein said helical thread means has an intermediate portion of maximum major thread diameter and has end sections tapering inwardly from said intermediate portion towards each end.

16. In an arrangement as defined in claim 13 and wherein the internal thread on said collar defines a tapered helical thread and said helical thread means has an intermediate portion of minimum major thread diameter and has end sections tapering outwardly from said intermediate portion towards each end, each end section corresponding in pitch and taper to said tapered helical thread.

17. In an arrangement as defined in claim 13 and wherein said cage has lengthwise rods extending through said helical thread means and having outwardly offset bend portions presenting a profile matching the internal profile of said helical thread means and a gas nozzle member disposed within said end portion of the cage in snap fit relation to said helical thread means.

18. In an arrangement as defined in claim 13 and wherein said cage has a main length portion of smaller diameter than said end portion and said bag is of a size to fit in snug relation over said helical thread means and in slack relation over the main length portion of the cage.

19. In an arrangement as defined in claim 13 wherein said collar has an internal knuckle groove defining said internal helical thread, said internal helical thread having a groove to groove spacing of about the same dimension as the local thread ridge of said thread means.

20. In an arrangement as defined in claim 13 wherein said thread means comprises a multi-turn wire coil having a turn to turn spacing of about the same dimension as the wire diameter and wherein said collar has an internal knuckle groove defining said internal helical thread of a size to receive the bag and the wire coil in snug axially sealed and interlocked relation, with said internal helical thread having an intergroove surface of about the same dimension as the local thread ridge of said wire for helical sealing contact with the bag.

* * * * *

UNITED STATES PATENT OFFICE
CERTIFICATE OF CORRECTION

Patent No. 3,844,750 Dated October 29, 1974

Inventor(s) Frank M. Ray

It is certified that error appears in the above-identified patent and that said Letters Patent are hereby corrected as shown below:

Column 1, line 35, "cuases" should read -- causes --; line 56, "arount" should read -- around --. Column 4, line 35, "and and" should read -- "and" --; line 38, "defing" should read -- define --. Column 6, line 26, "comprable" should read -- comparable --. Column 7, line 18, "than helical thread" should read -- than said helical thread --. Column 8, line 23, "claim 1" should read -- Claim 11 --; line 54, "htread" should read -- thread --.

Signed and sealed this 4th day of February 1975.

(SEAL)
Attest:

McCOY M. GIBSON JR.
Attesting Officer

C. MARSHALL DANN
Commissioner of Patents

USCOMM-DC 60376-P69
U.S. GOVERNMENT PRINTING OFFICE : 869-930