US 20040169642A1

(19) **United States**

(12) **Patent Application Publication** (10) **Pub. No.: US 2004/0169642 A1**

**Olodort et al.** (43) **Pub. Date: Sep. 2, 2004**

(54) **FOLDABLE KEYBOARD**

(76) Inventors: **Robert Olodort**, Santa Monica, CA (US); **John Tang**, San Carlos, CA (US); **Peter M. Cazalet**, Campbell, CA (US); **Sung Kim**, Palo Alto, CA (US); **Arturo Meuniot**, San Francisco, CA (US); **Paul Martin Donovan**, Santa Clara, CA (US)

Correspondence Address:
**James C. Scheller, Jr.**
**BLAKELY, SOKOLOFF, TAYLOR & ZAFMAN LLP**
**Seventh Floor**
**12400 Wilshire Boulevard**
**Los Angeles, CA 90025 (US)**

(21) Appl. No.: **10/794,232**

(22) Filed: **Mar. 5, 2004**

**Related U.S. Application Data**

(60) Continuation of application No. 10/008,506, filed on Nov. 30, 2001, which is a division of application No. 09/540,669, filed on Mar. 31, 2000, now Pat. No. 6,734,809.

(60) Provisional application No. 60/127,651, filed on Apr. 2, 1999.

**Publication Classification**

(51) **Int. Cl.**[7] ..... **G09G 5/00**

(52) **U.S. Cl.** ..... **345/168**

(57) **ABSTRACT**

A foldable keyboard having a plurality of folding keyboard sections. Each keyboard section includes a frame carrying a key set having a plurality of keys. The key set may be movable laterally relative to the frame. The frame with the key set is foldable with respect to an adjacent frame. The frame provides a self-contained enclosure for the keyboard assembly when fully closed. When opened, the keyboard assembly can be a full-size standard QWERTY keyboard.

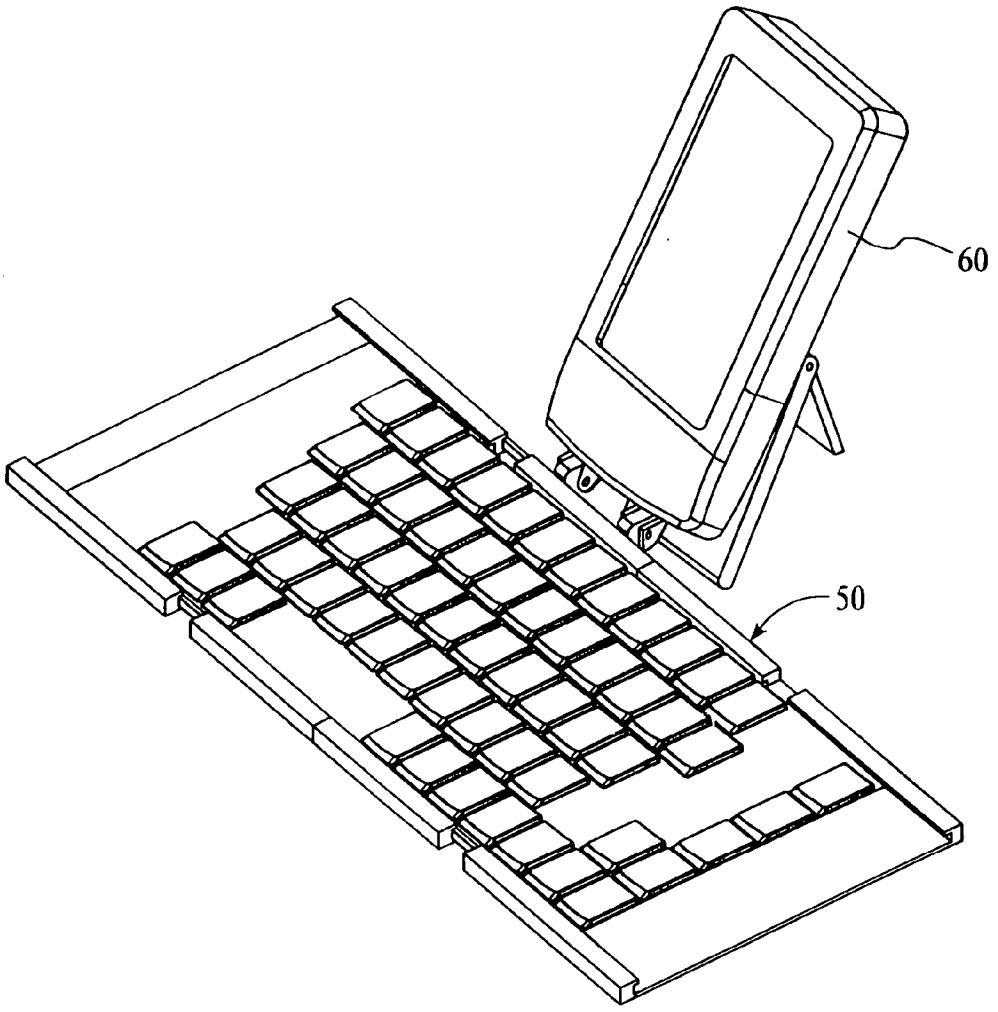

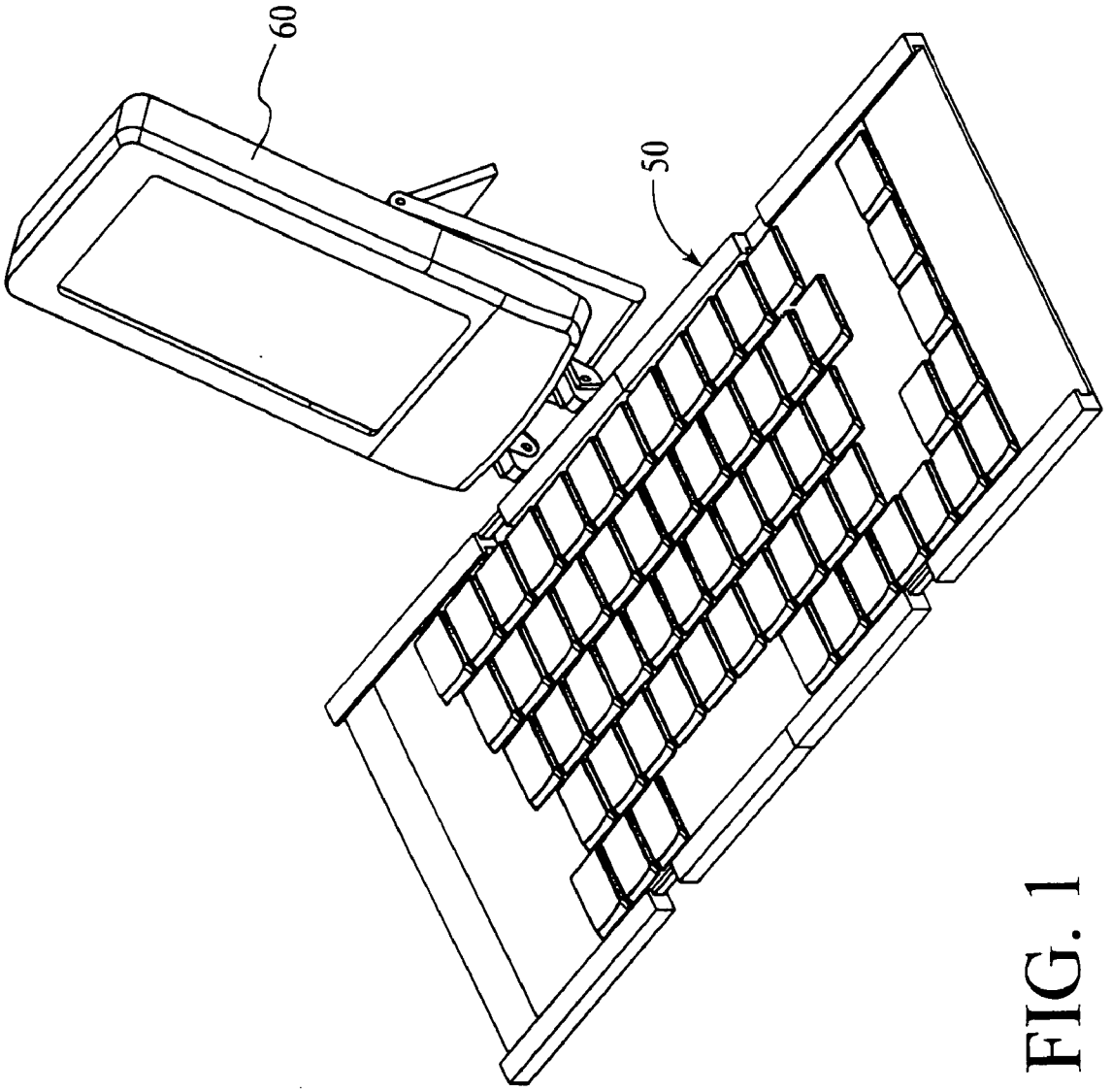


FIG. 1

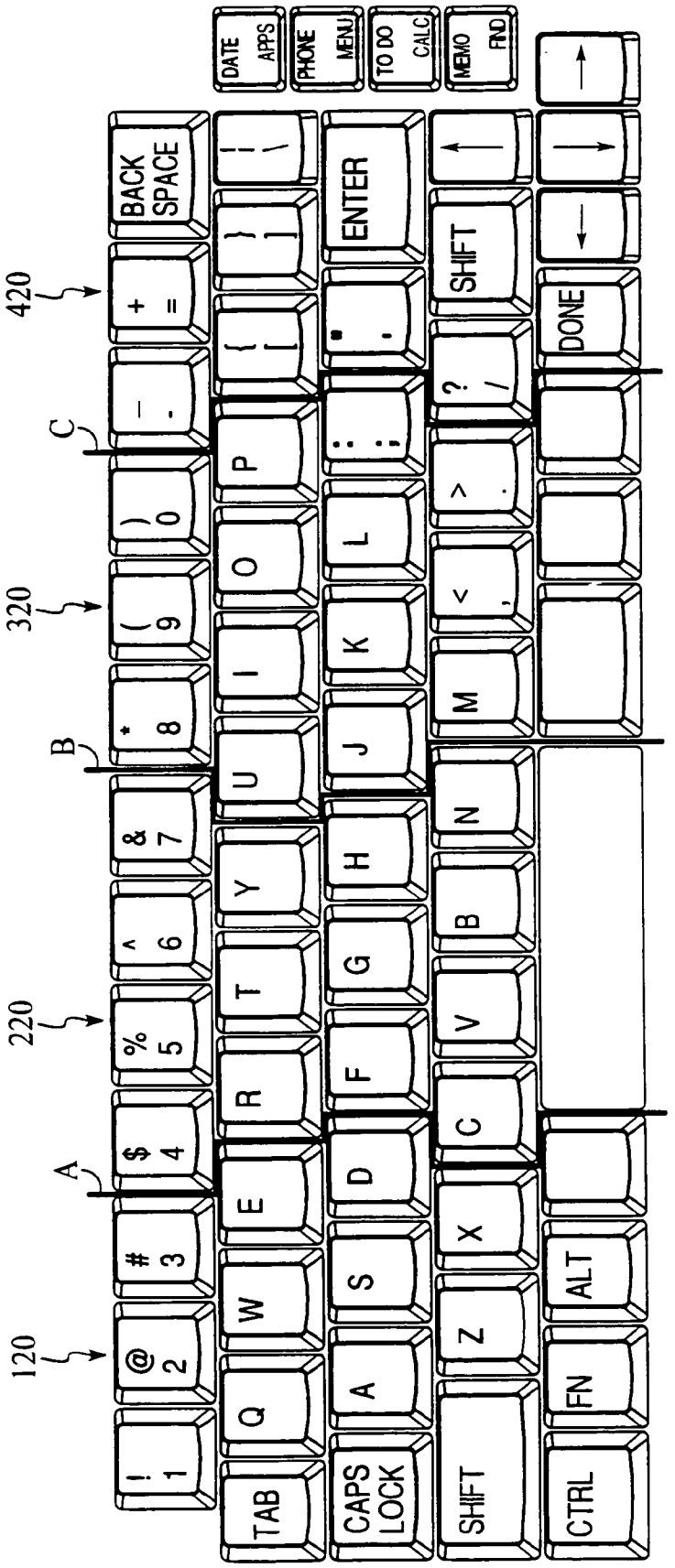
120
220
320
420
A
B
C
DATE APPS
PHONE MENU
TO DO CALC
MEMO FIND
BACK SPACE
ENTER
SHIFT
DONE
TAB
CAPS LOCK
SHIFT
CTRL
FN
ALT

FIG. 2

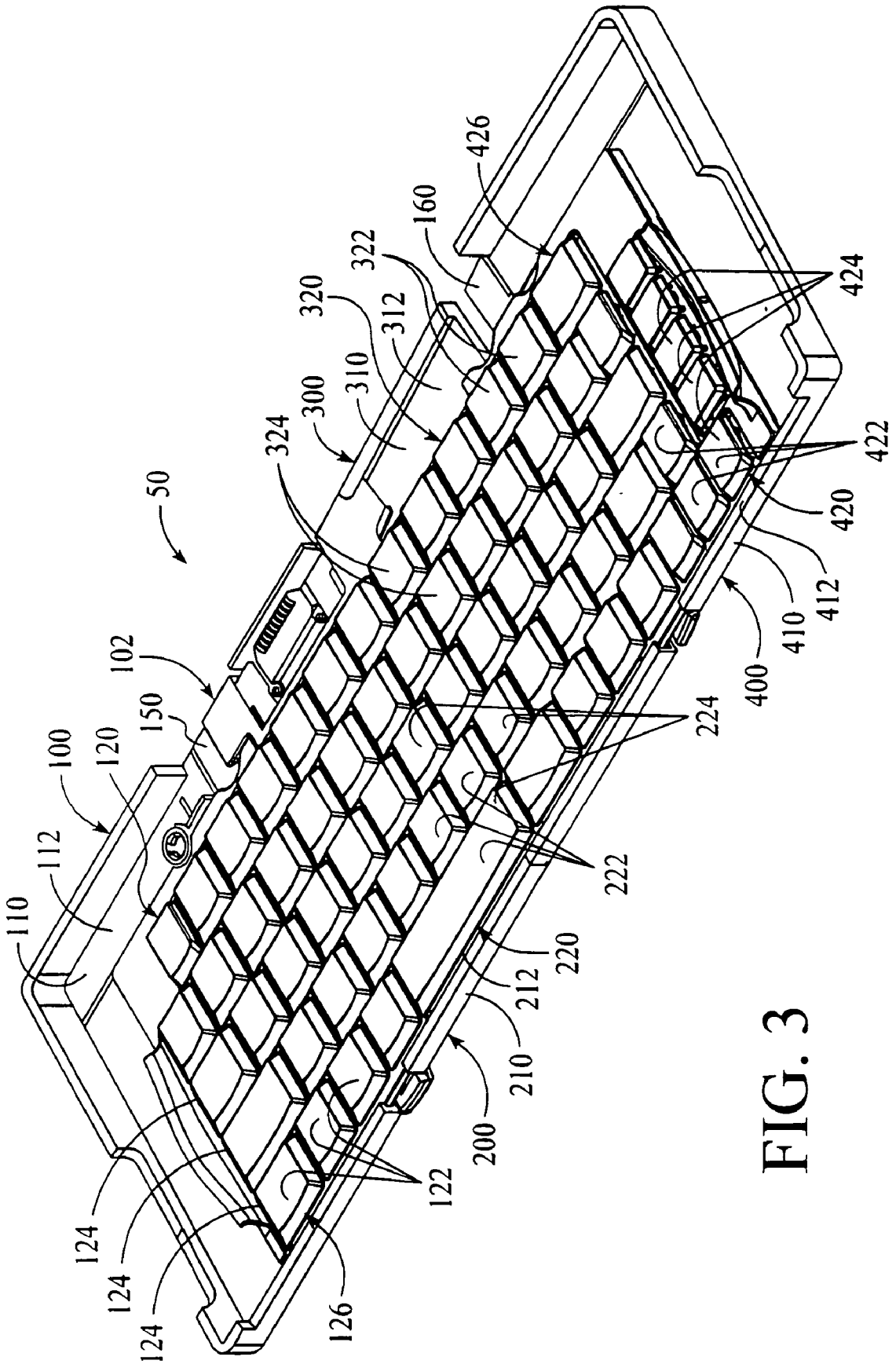
50
100
102
110
112
120
122
124
124
124
126
150
160
200
210
212
220
222
224
300
310
312
320
322
324
400
410
412
420
422
424
426

FIG. 3

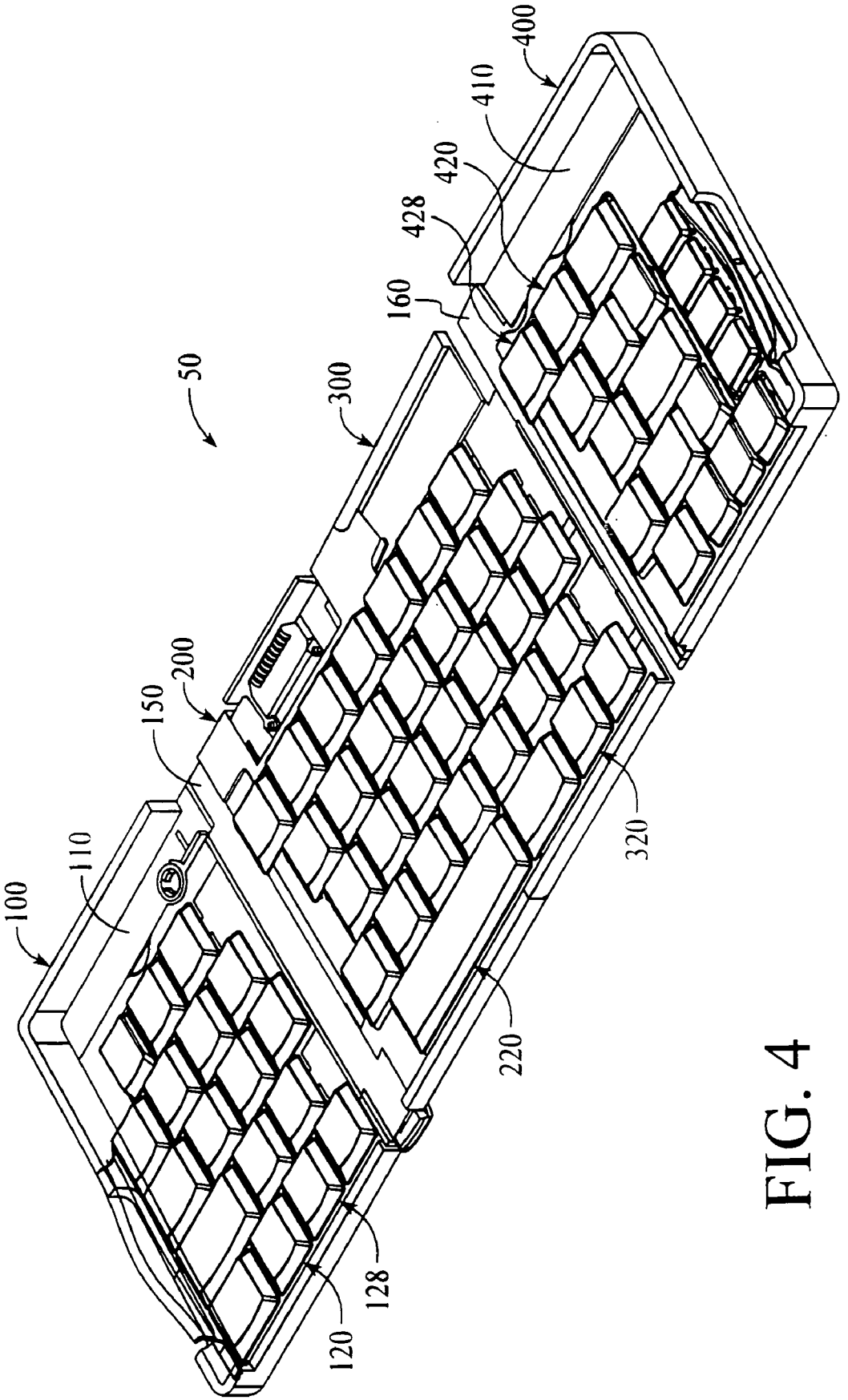


FIG. 4

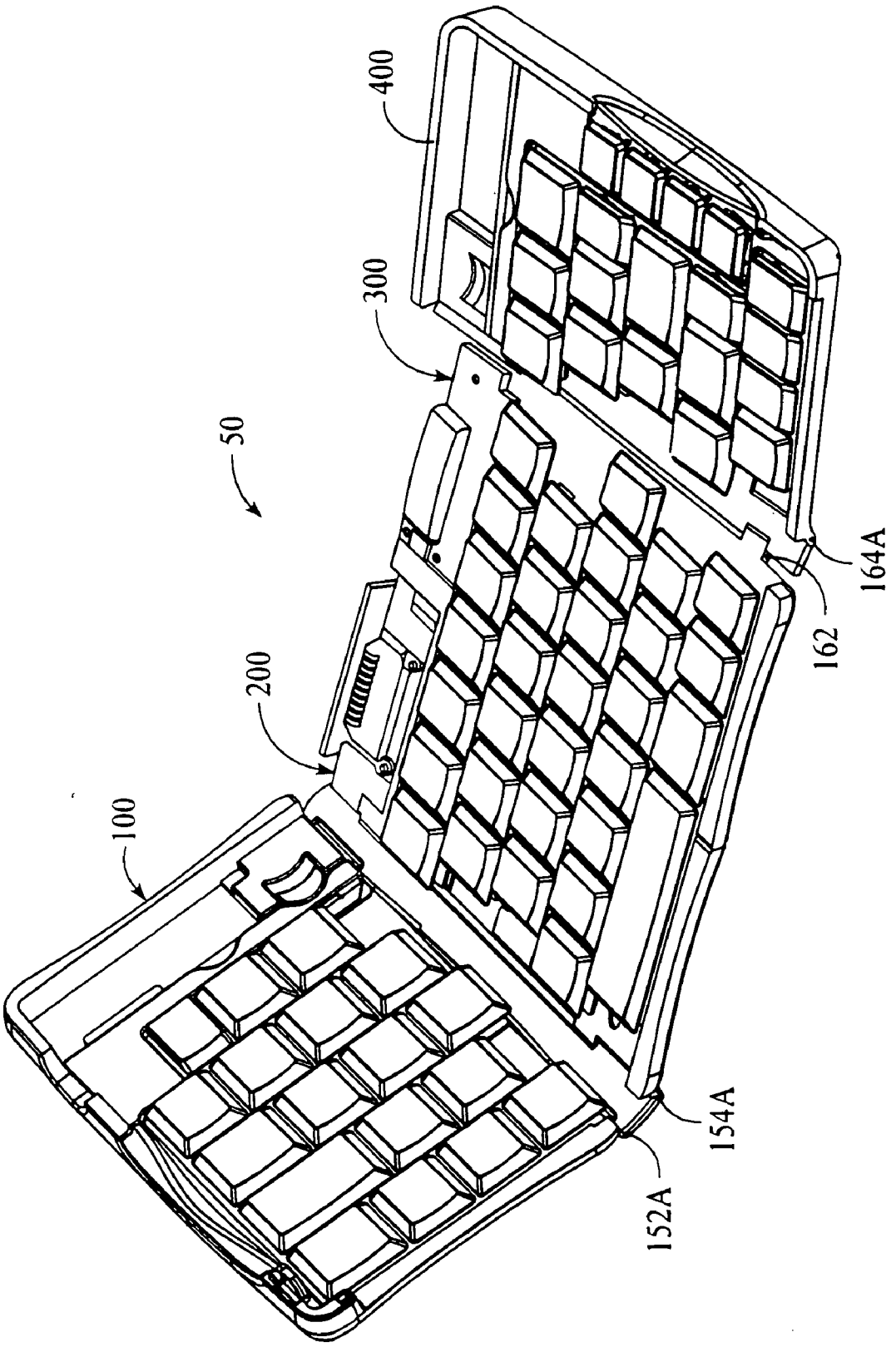


FIG. 5A

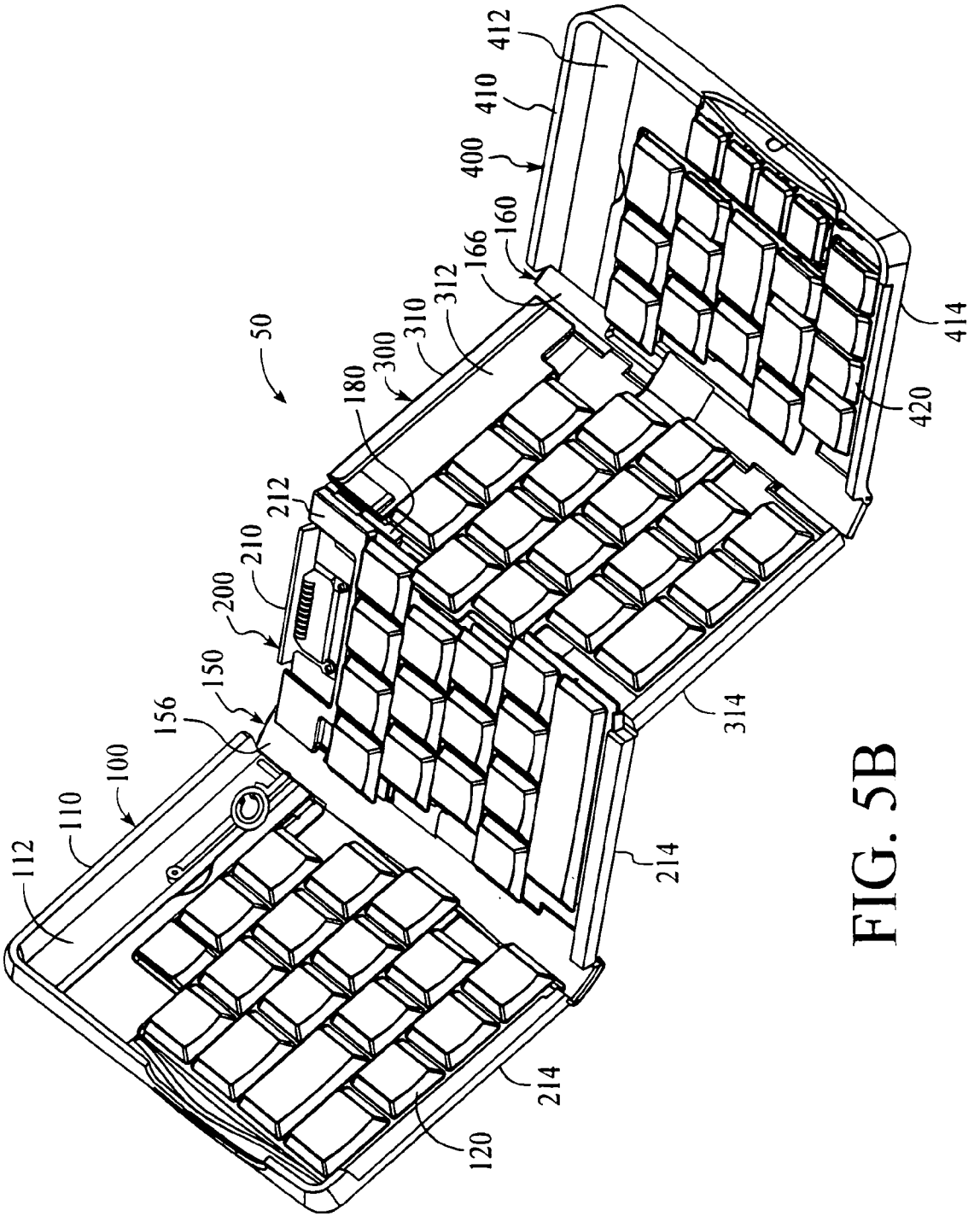
412
410
400
160
166
312
310
300
180
50
212
210
200
150
156
100
110
112
120
214
214
314
420
414

FIG. 5B

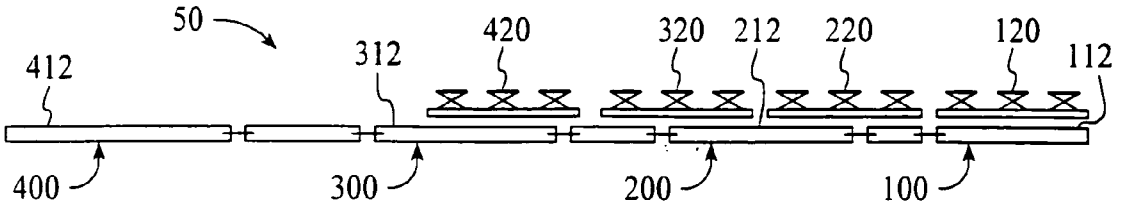


FIG. 5C

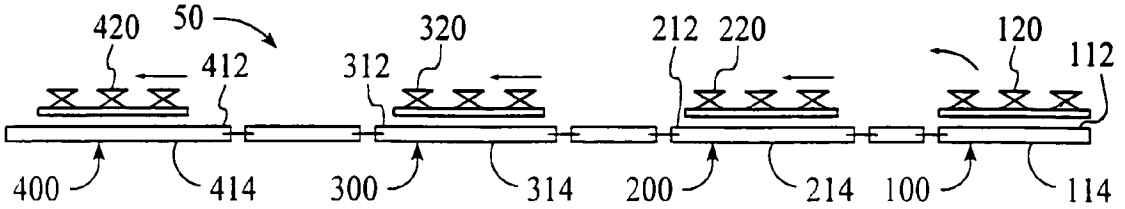


FIG. 5D

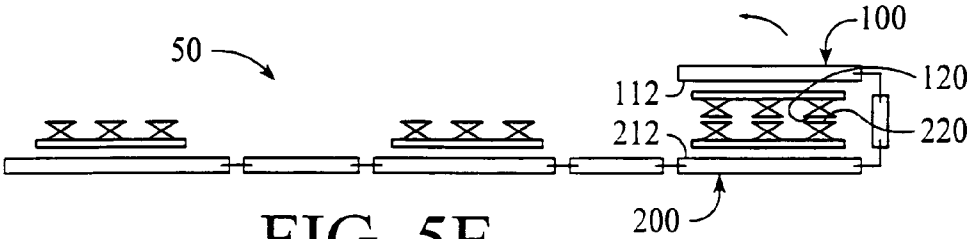


FIG. 5E

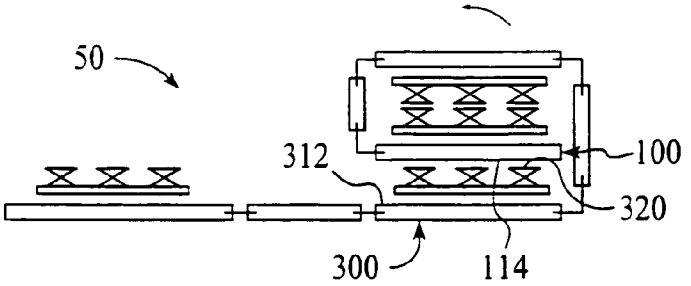


FIG. 5F

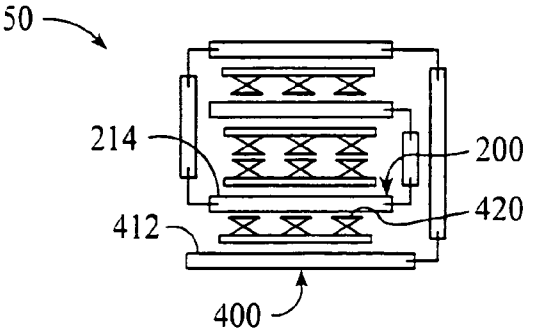


FIG. 5G

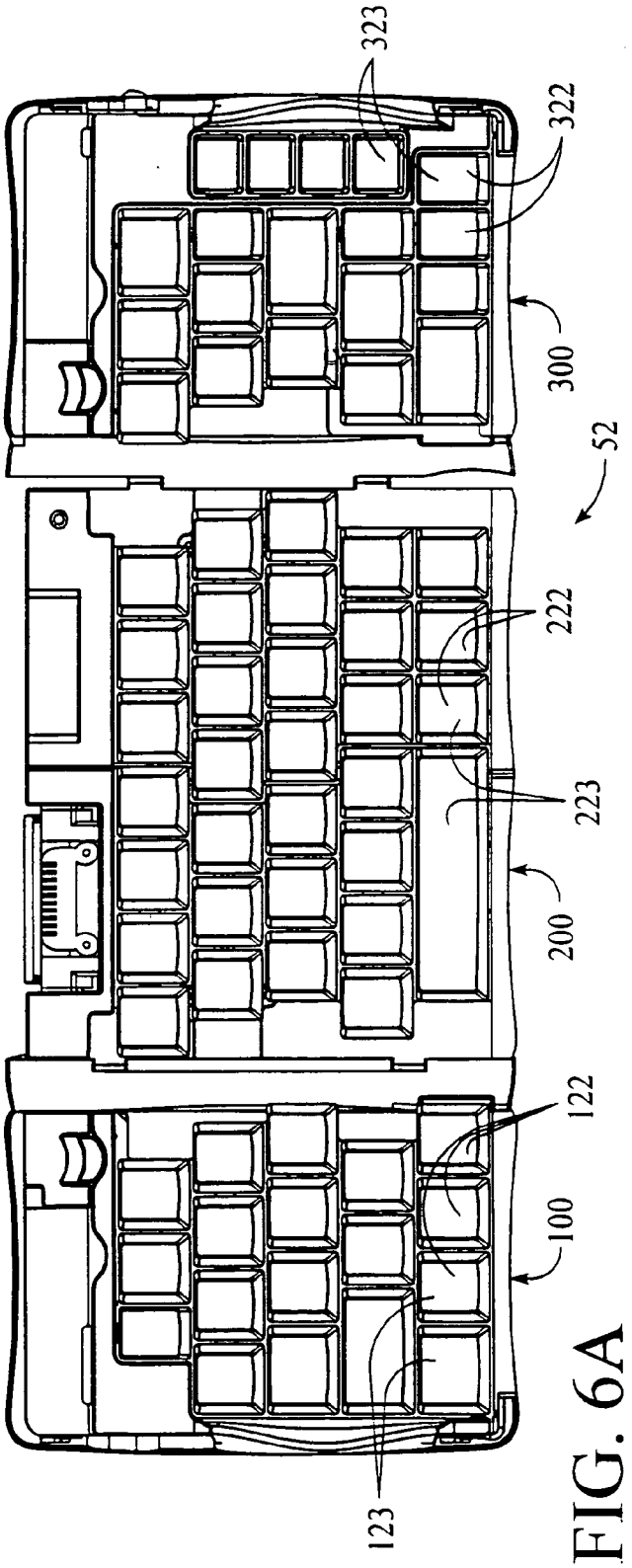
323
322
300
52
222
223
200
122
100
123

FIG. 6A

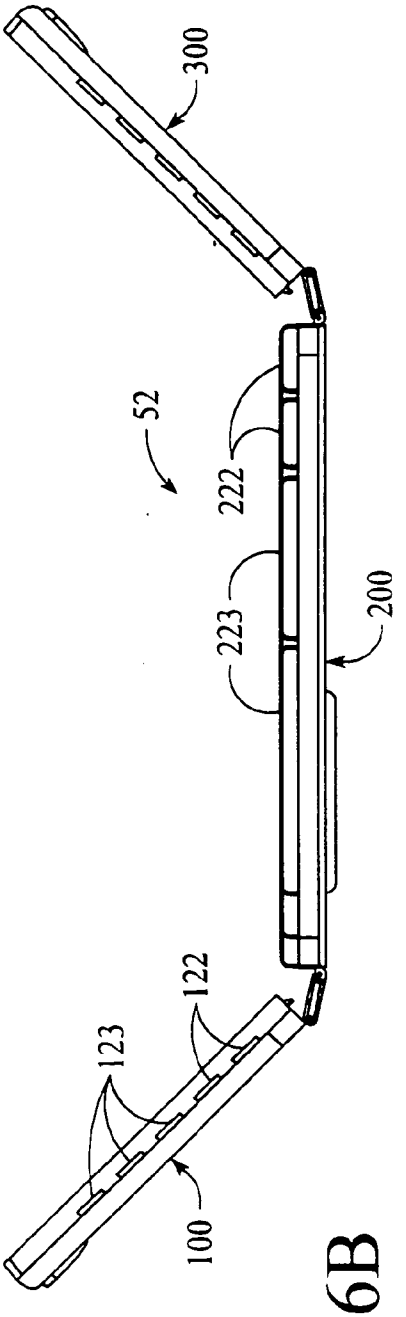
300
52
222
223
200
122
123
100

FIG. 6B

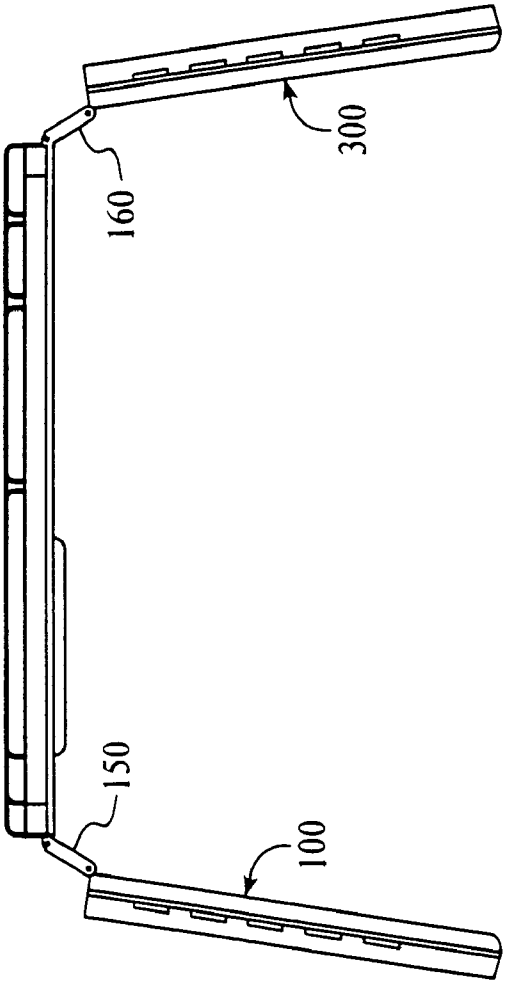


FIG. 6C

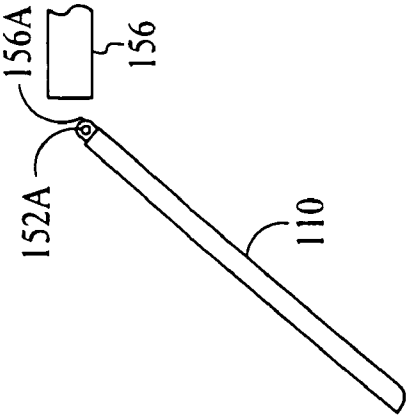


FIG. 6E

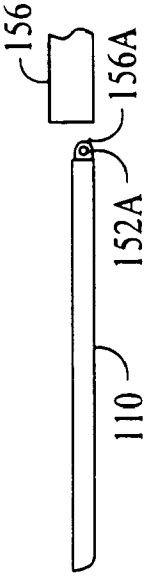


FIG. 6D

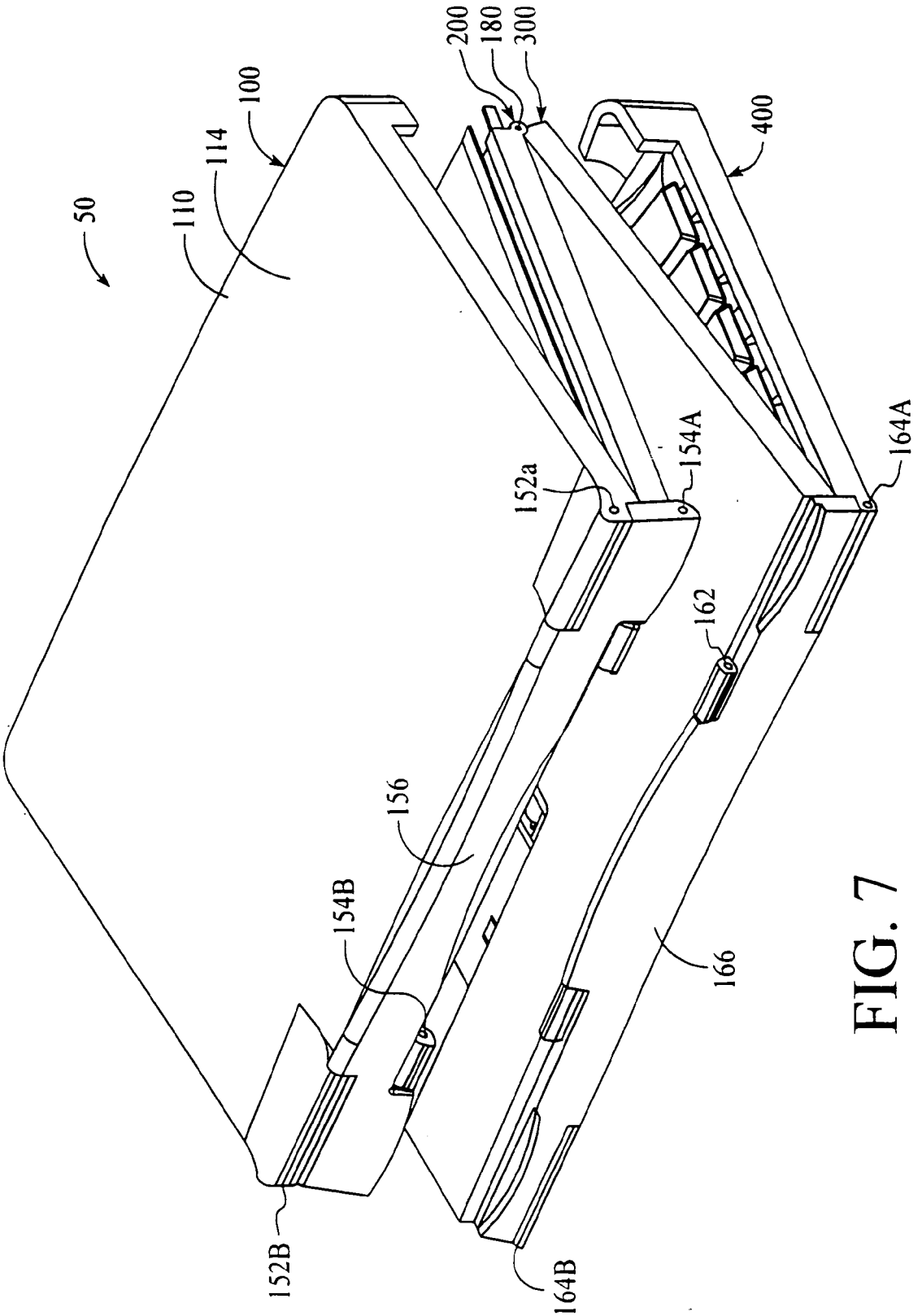
50
110
114
100
200
180
300
400
152a
154A
164A
162
156
154B
166
152B
164B

FIG. 7

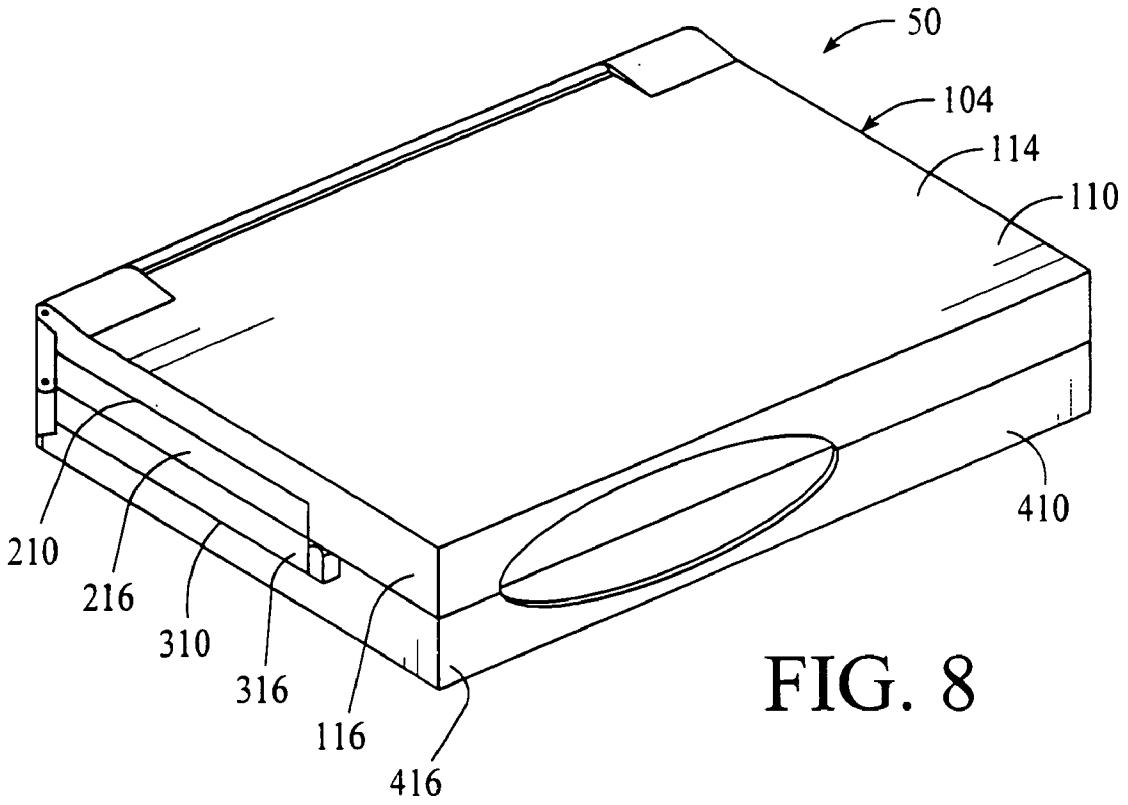


FIG. 8

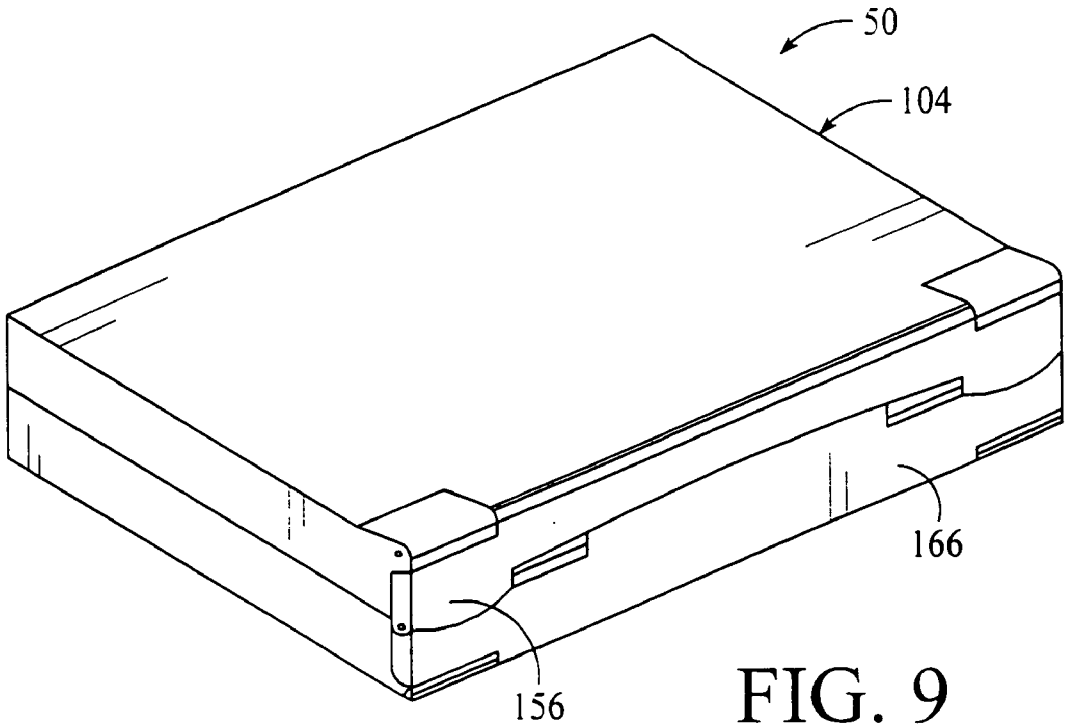


FIG. 9

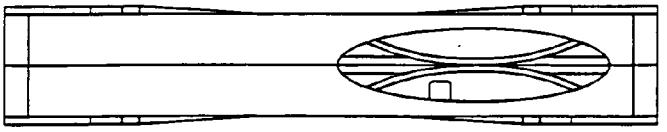

FIG. 13

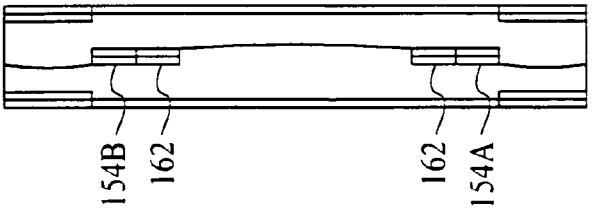


FIG. 11

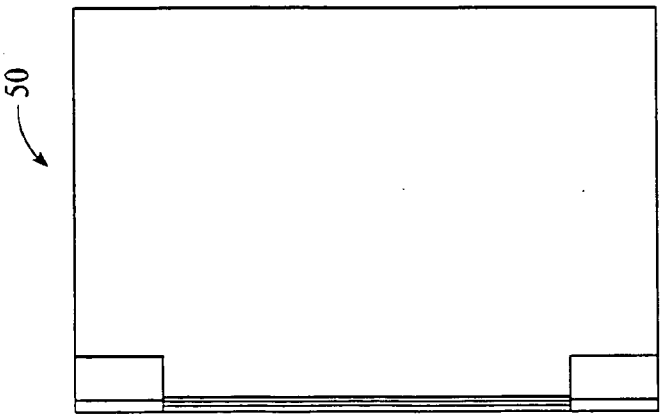


FIG. 10

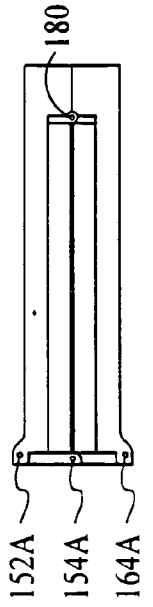


FIG. 14

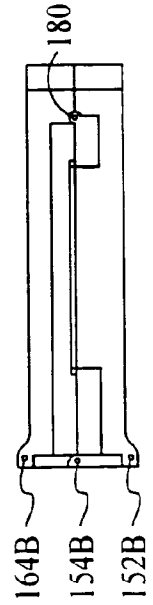


FIG. 12

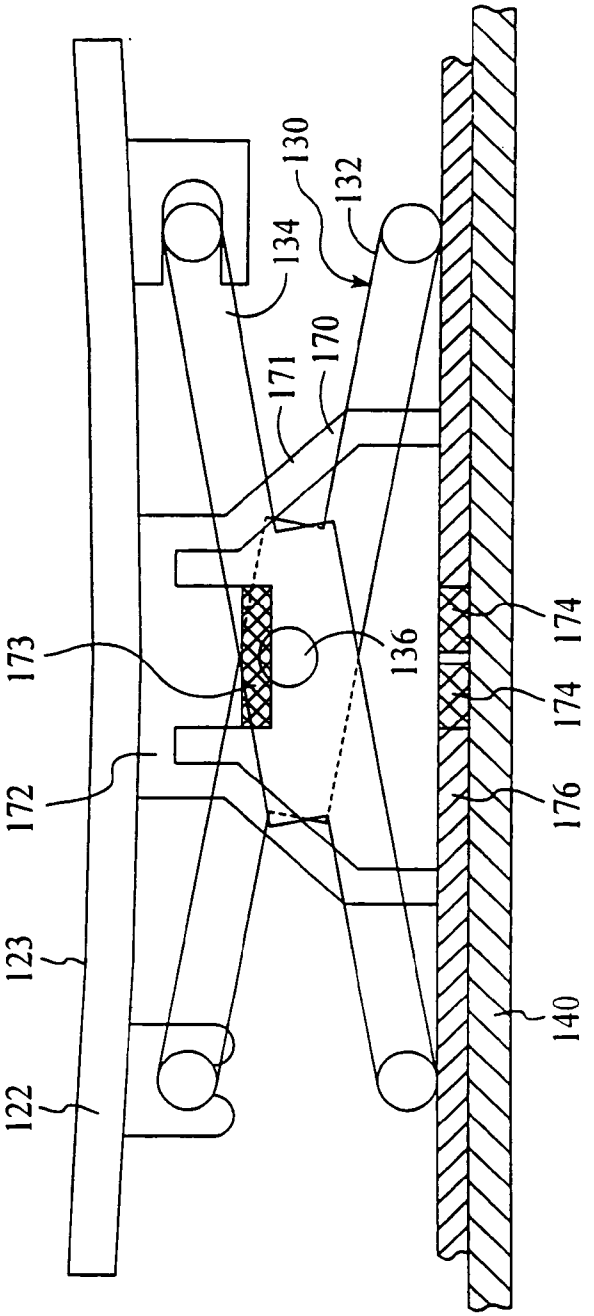


FIG. 15A

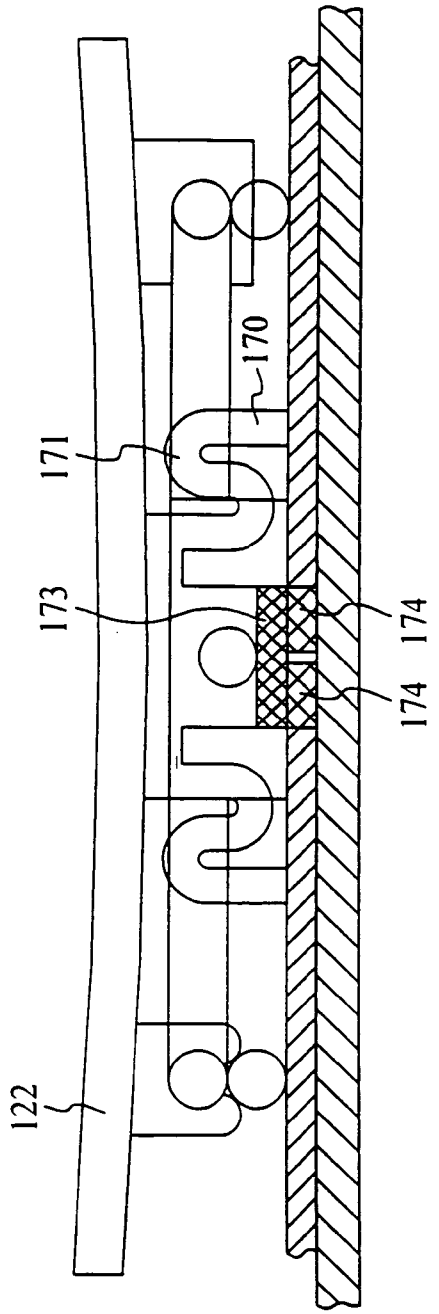


FIG. 15B

FIG. 16

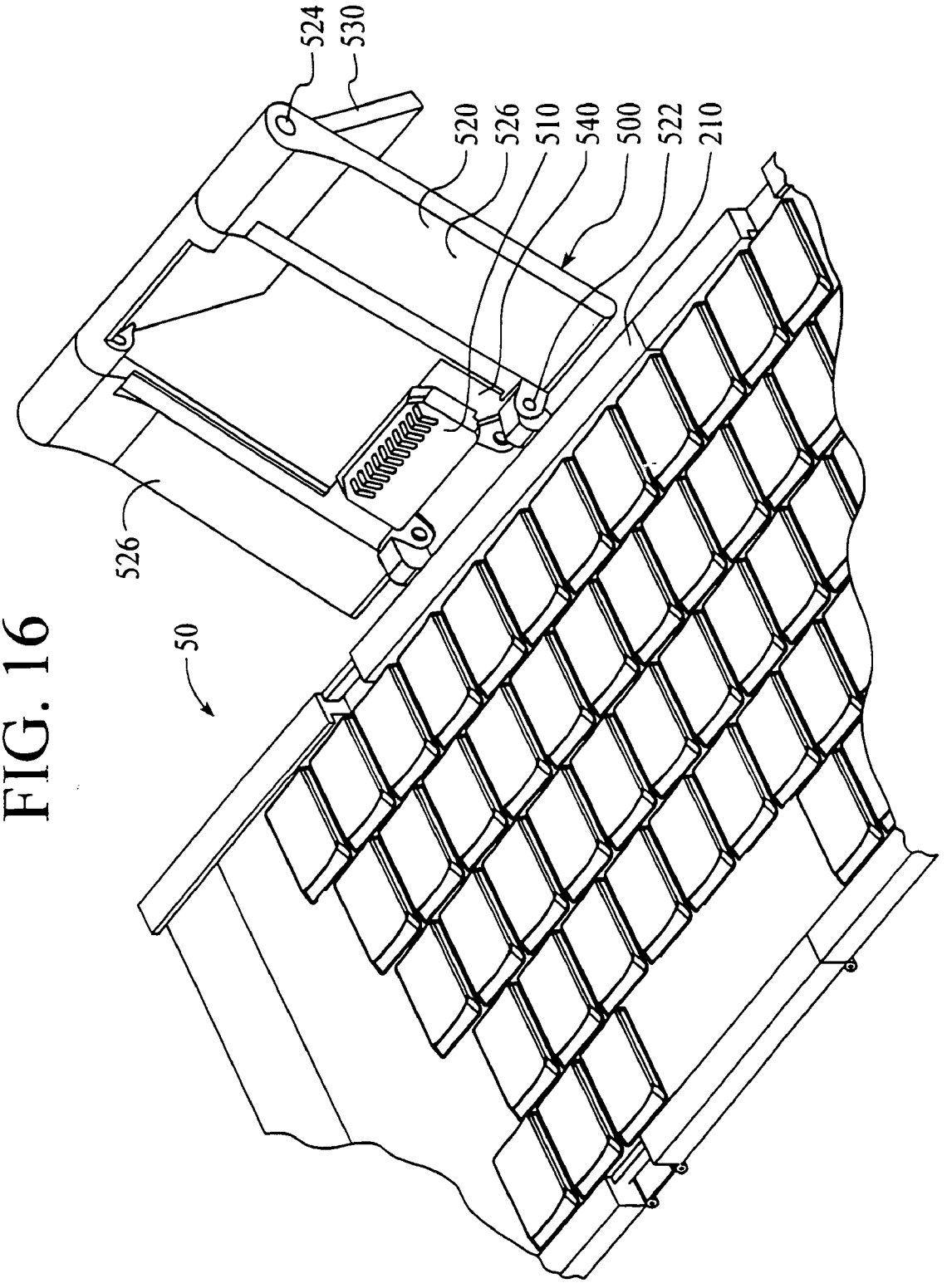

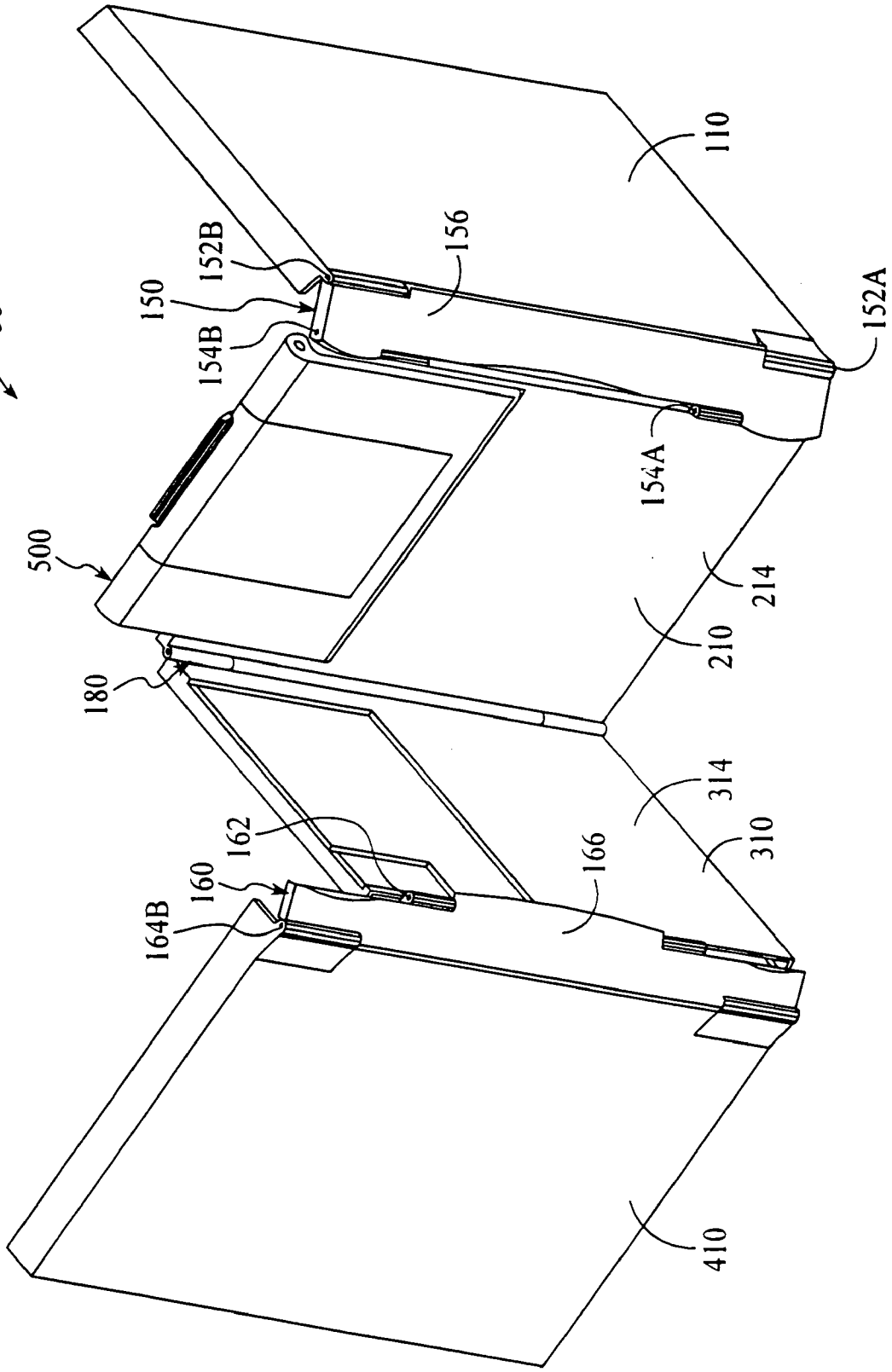
50
500
180
150
152B
154B
156
110
152A
154A
214
210
314
310
162
160
164B
166
410

FIG. 17

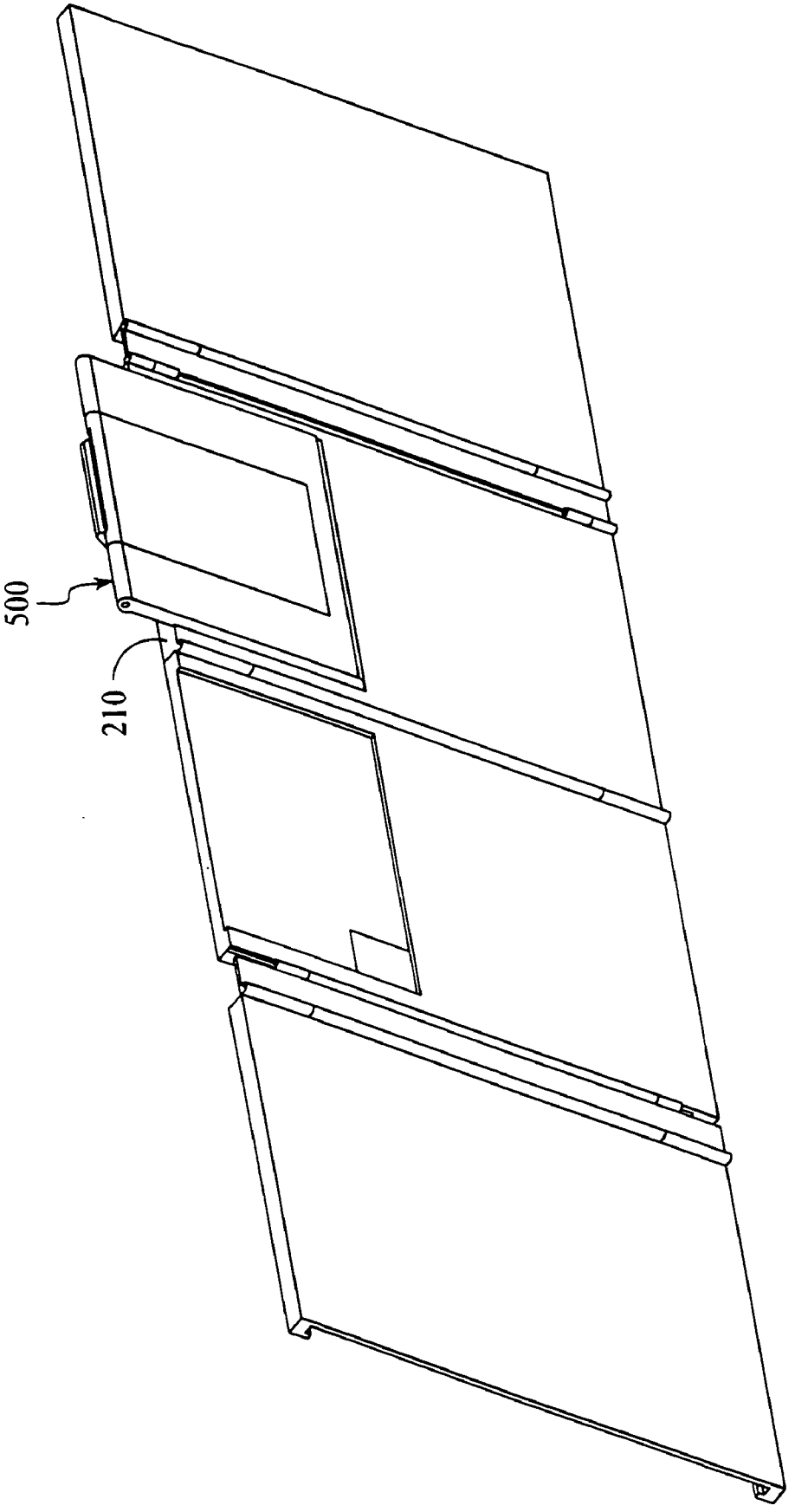


FIG. 18

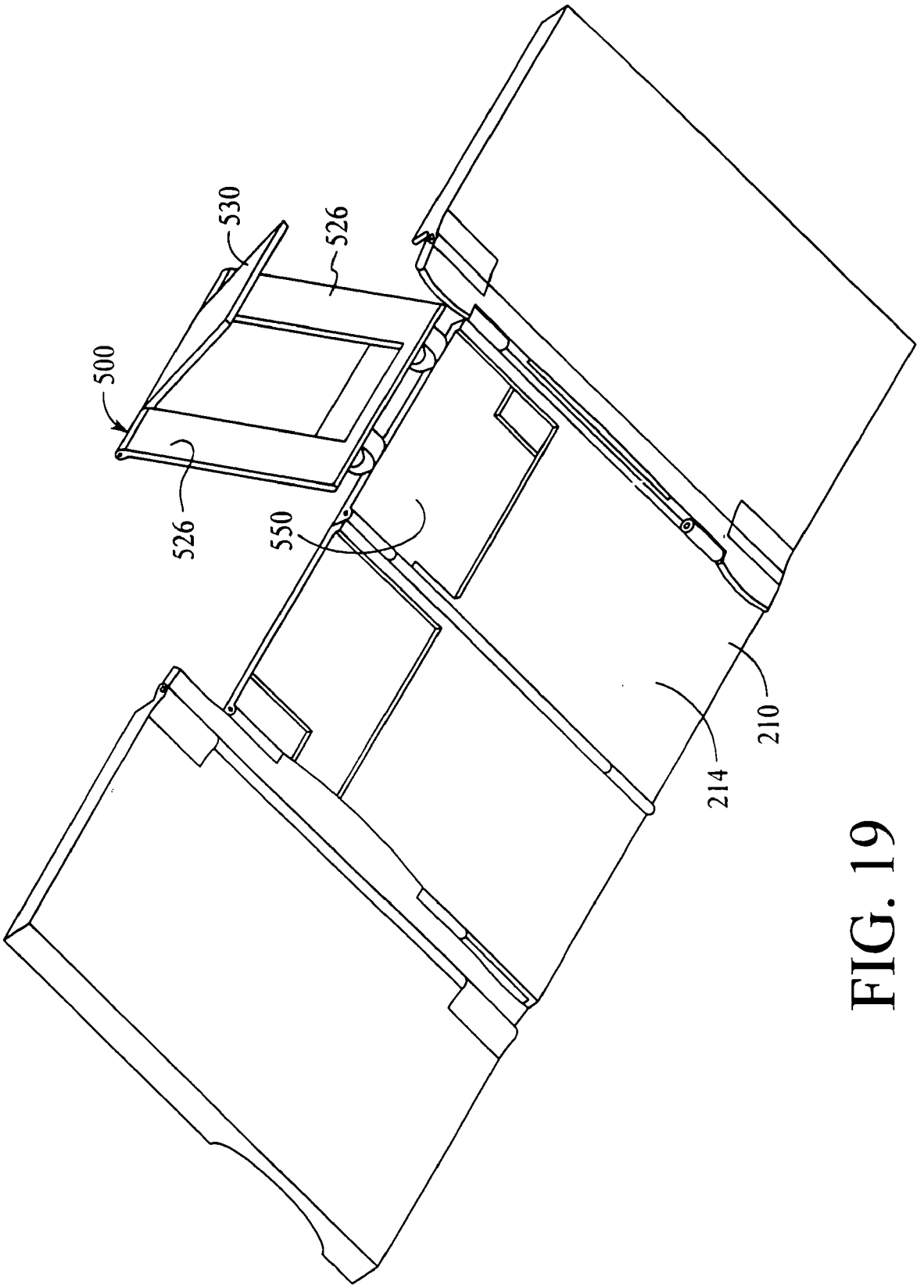


FIG. 19

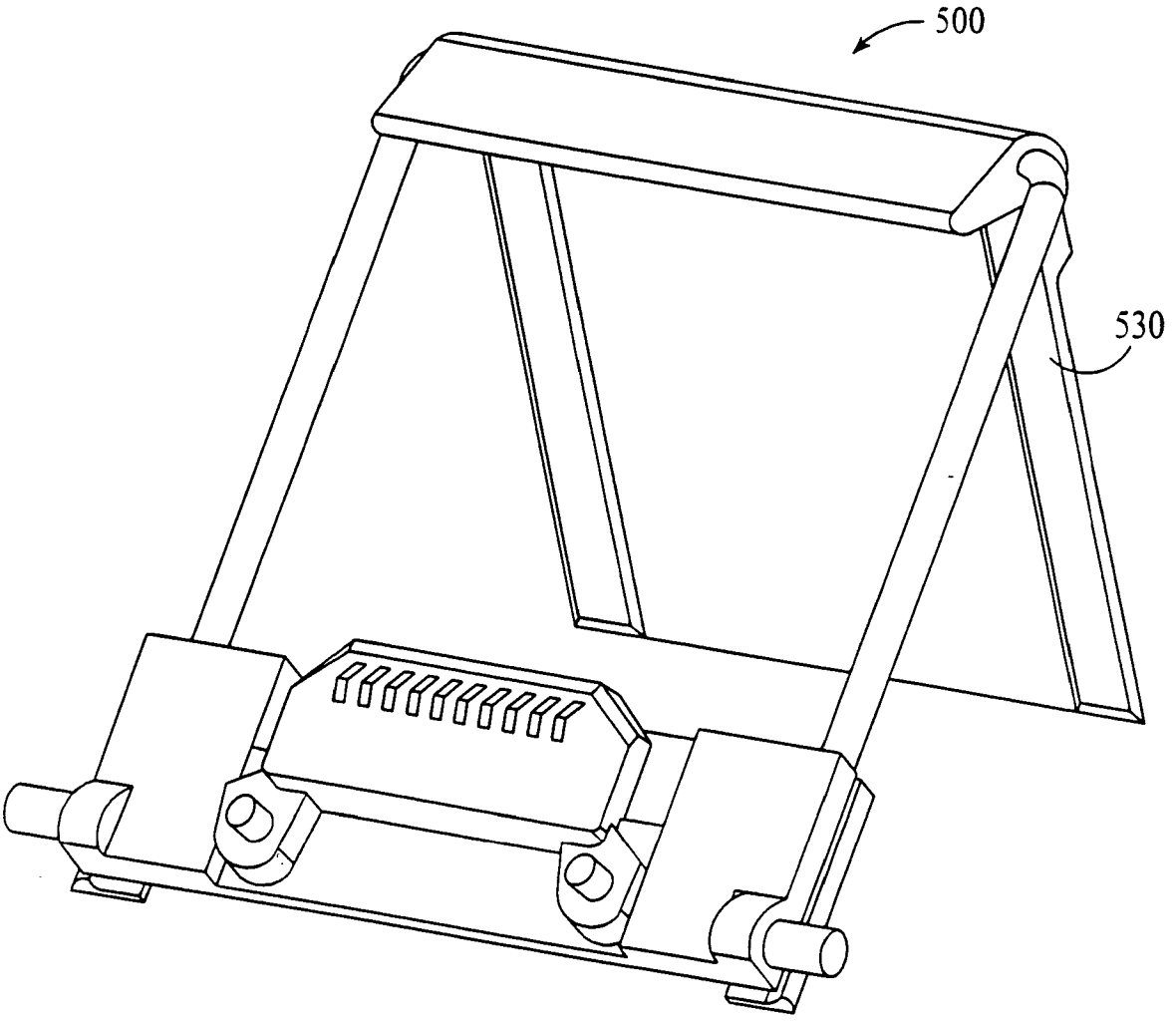


FIG. 20A

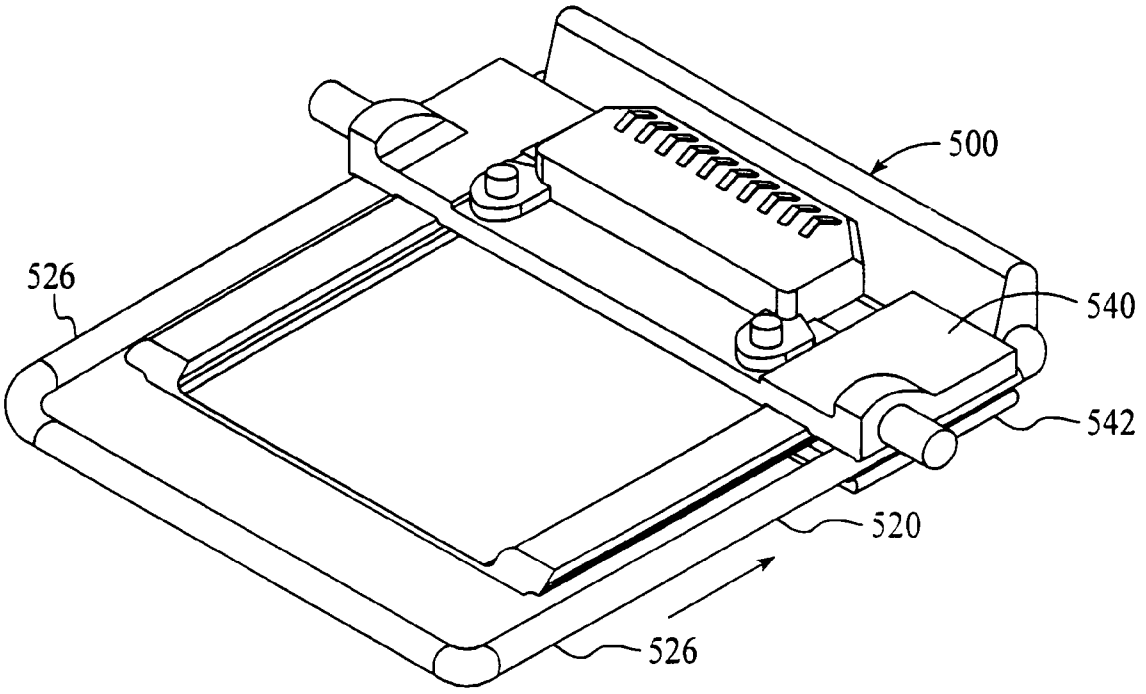


FIG. 20B

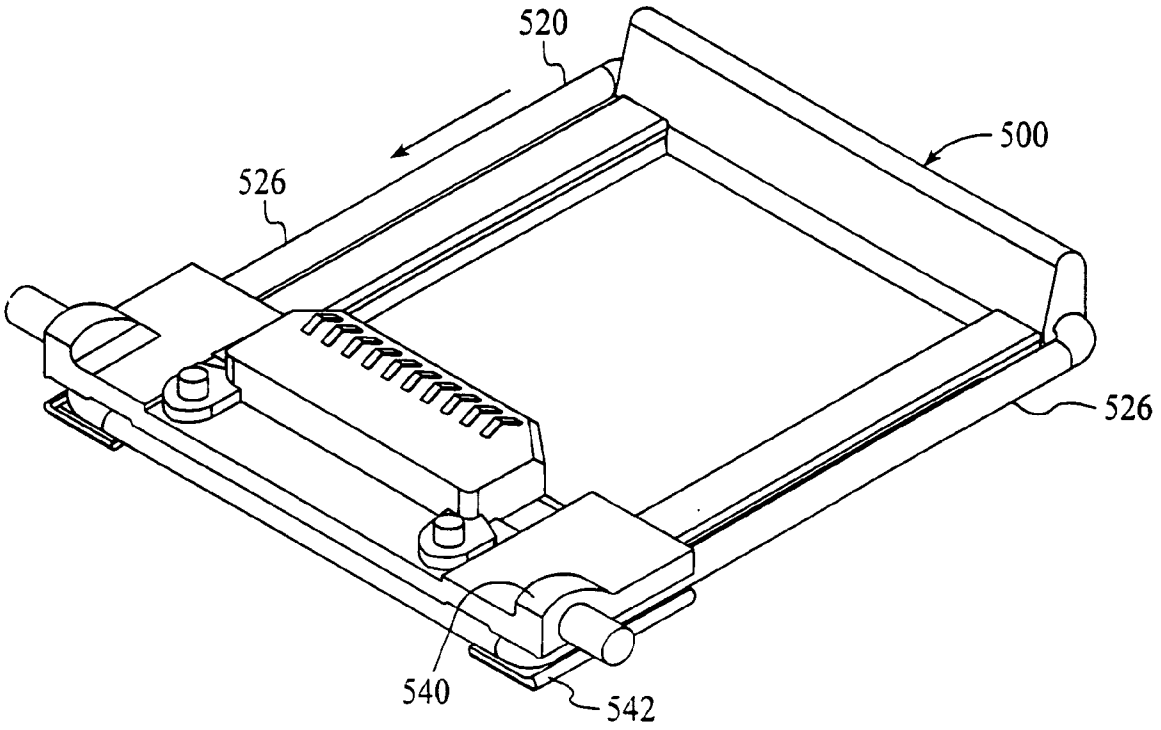


FIG. 20C

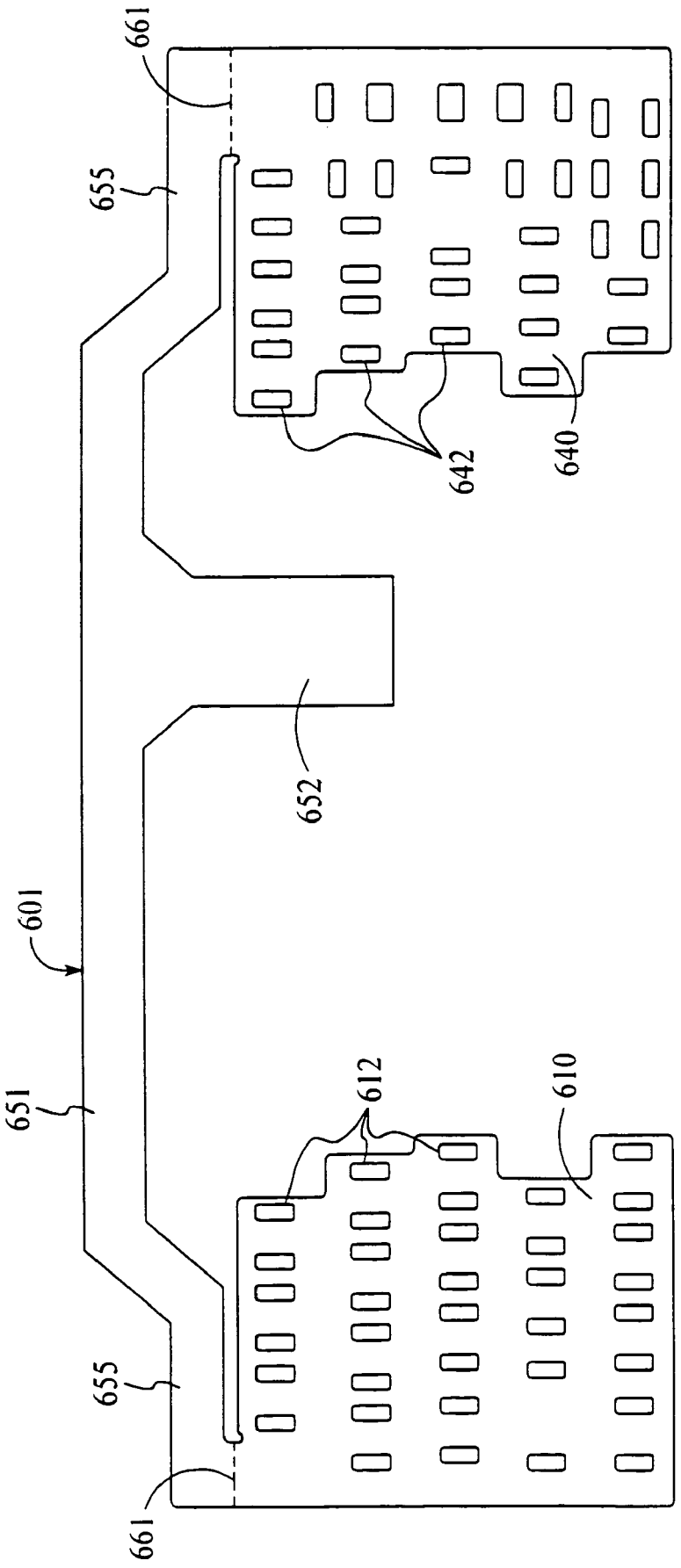


FIG. 21

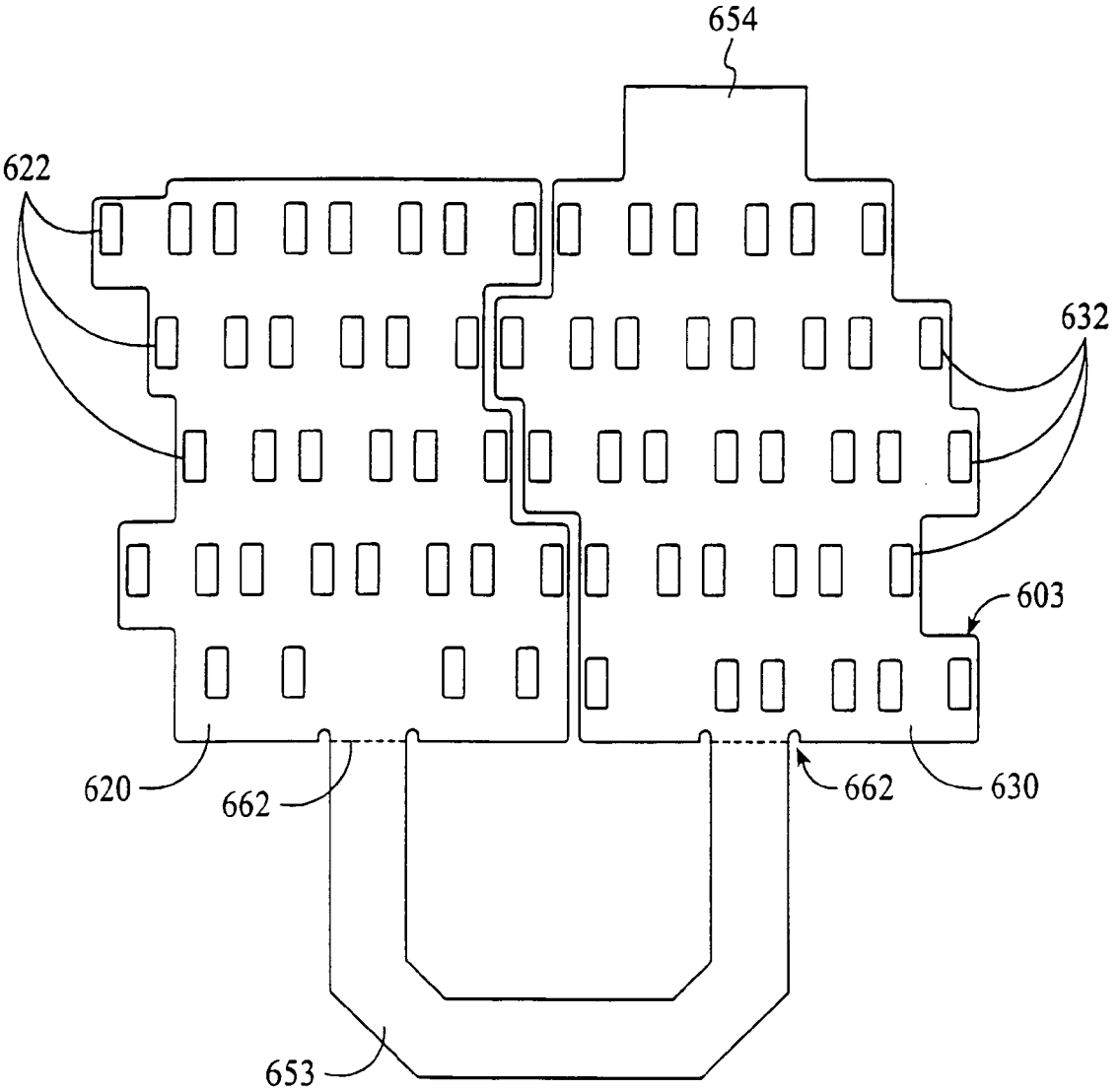


FIG. 22

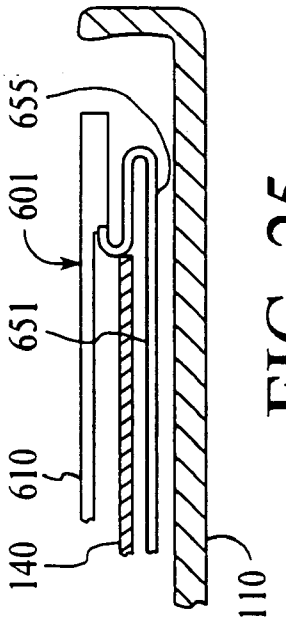


FIG. 25

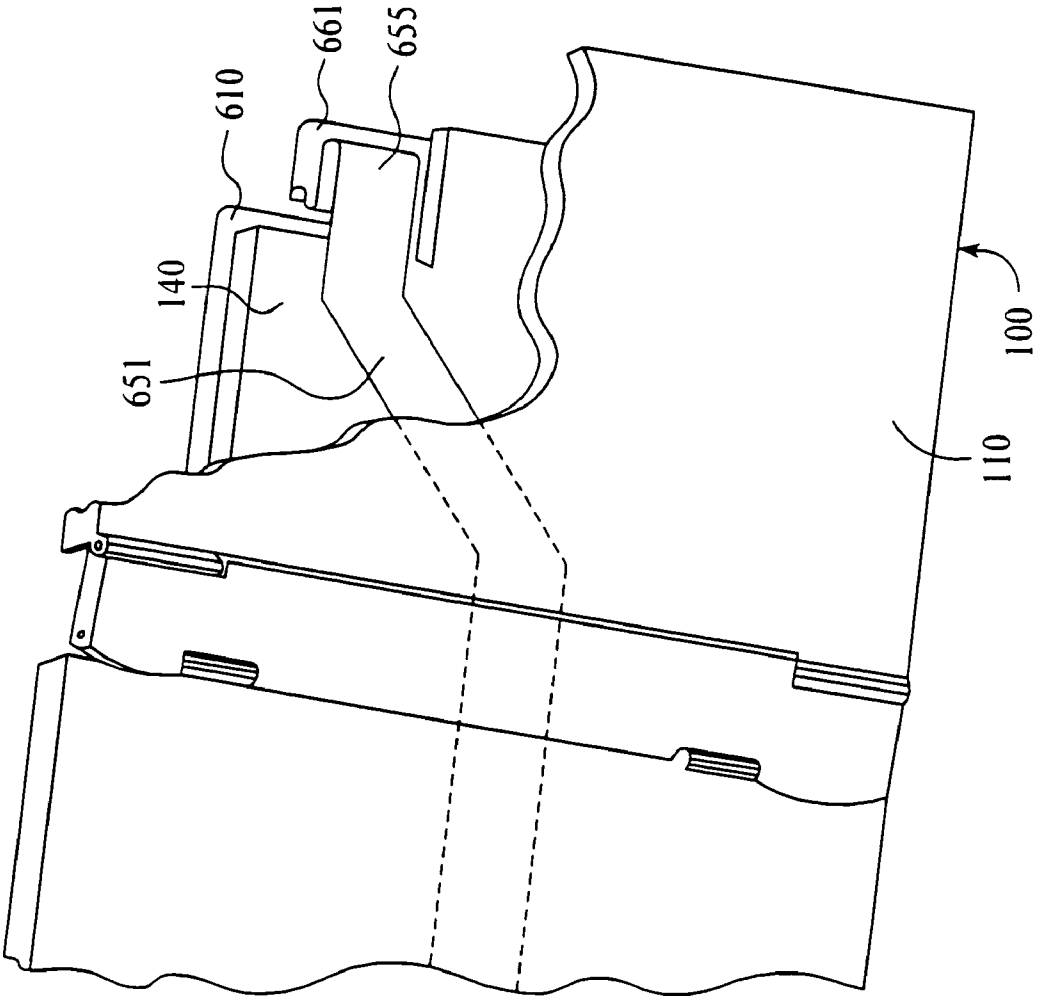


FIG. 23

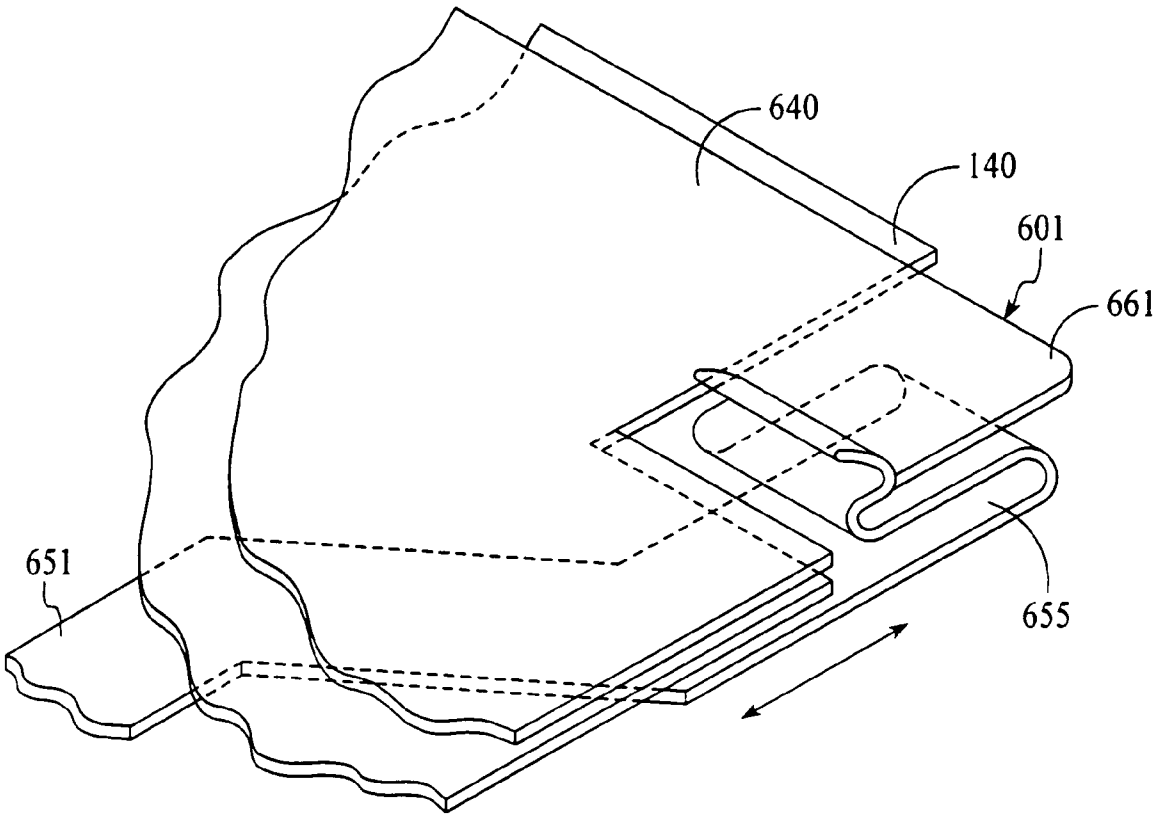


FIG. 24

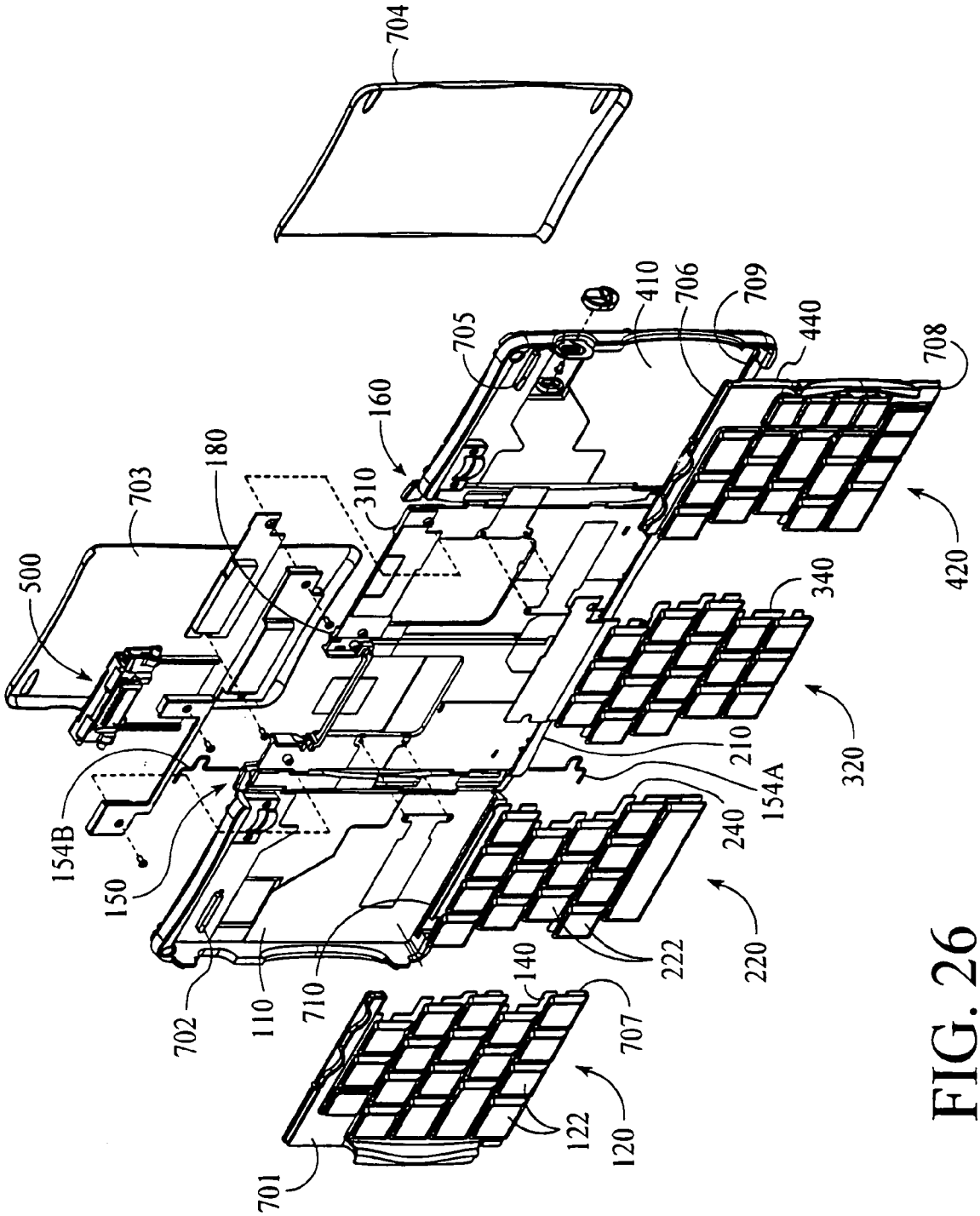
704
410
706
709
705
440
708
160
180
703
310
500
420
340
320
210
154A
154B
240
150
220
222
140
702
110
710
707
122
120
701

FIG. 26

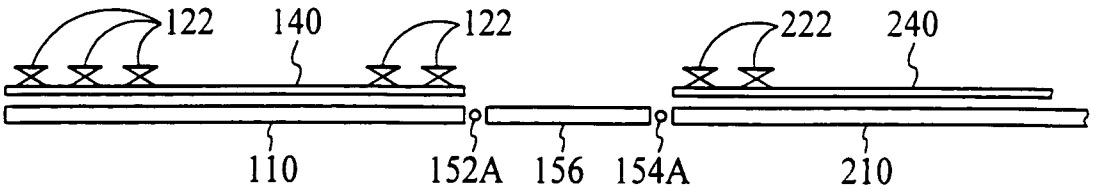


FIG. 27A

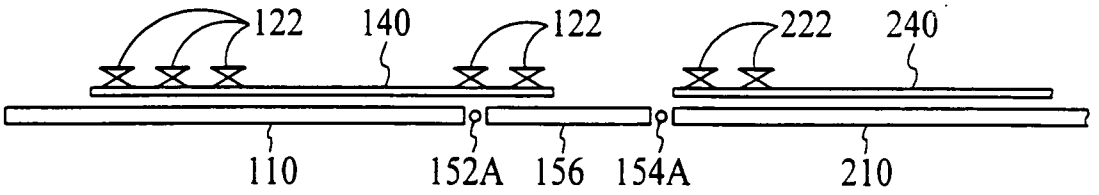


FIG. 27B

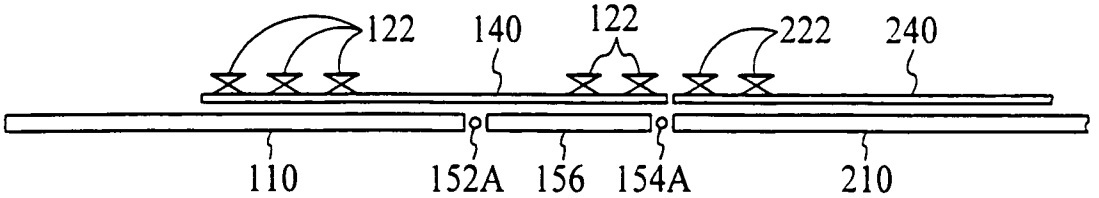


FIG. 27C

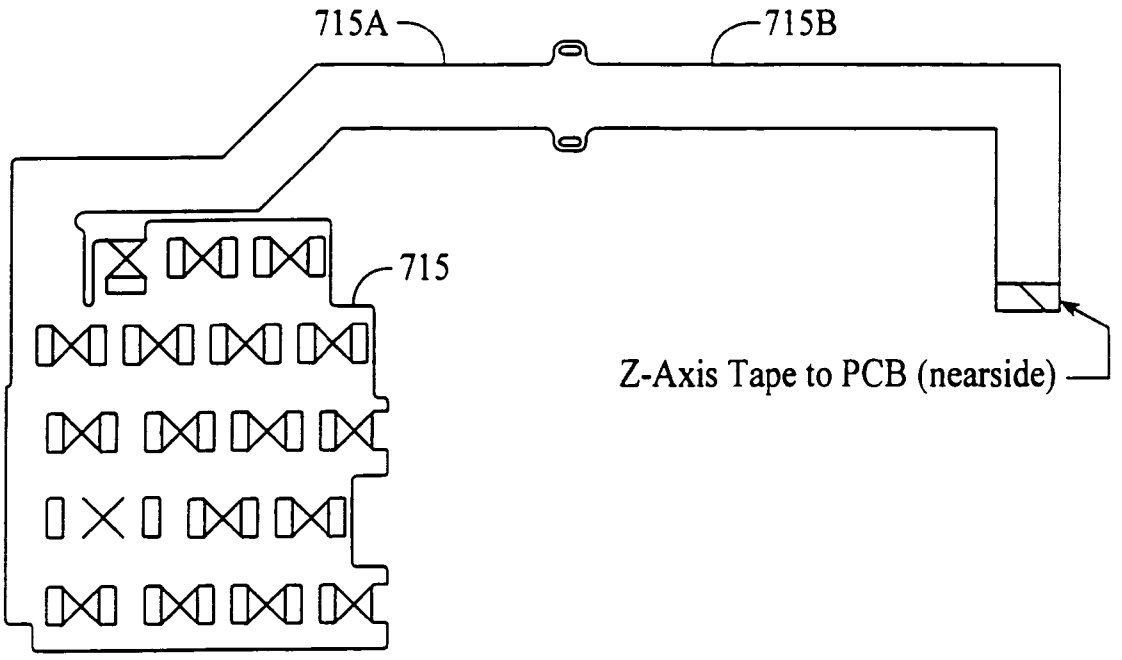


FIG. 28A

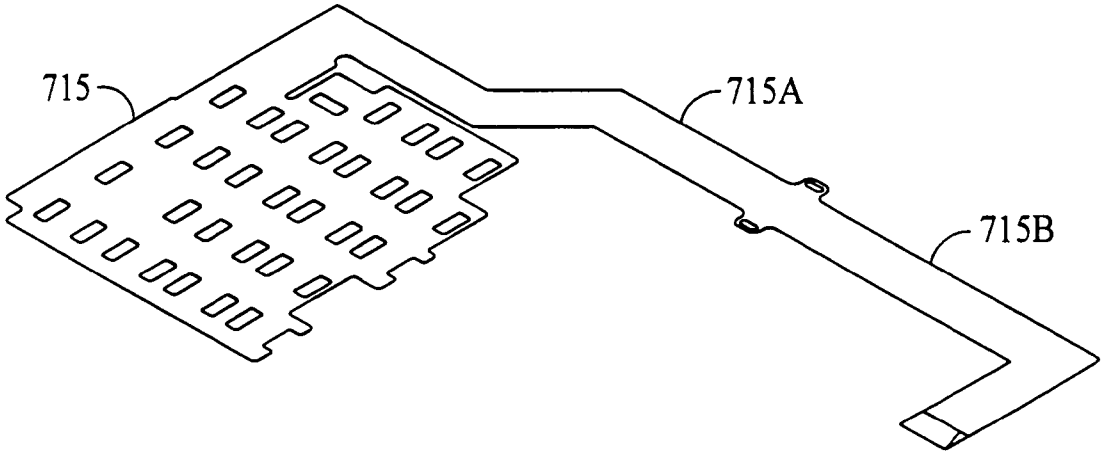


FIG. 28B

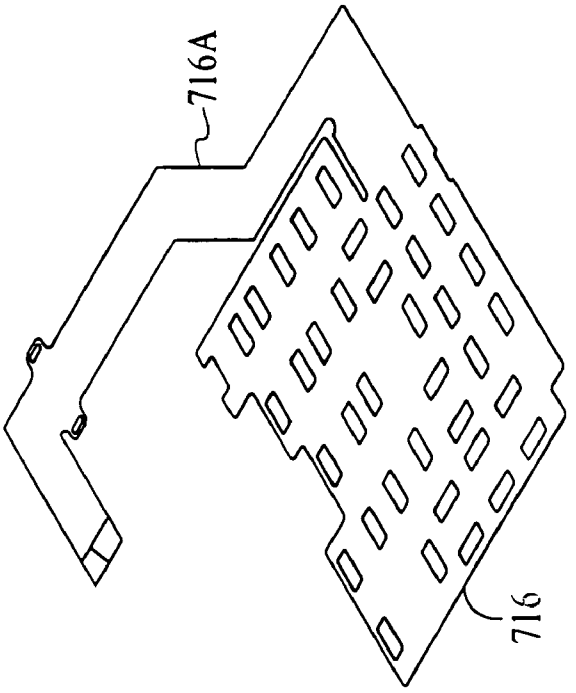


FIG. 29B

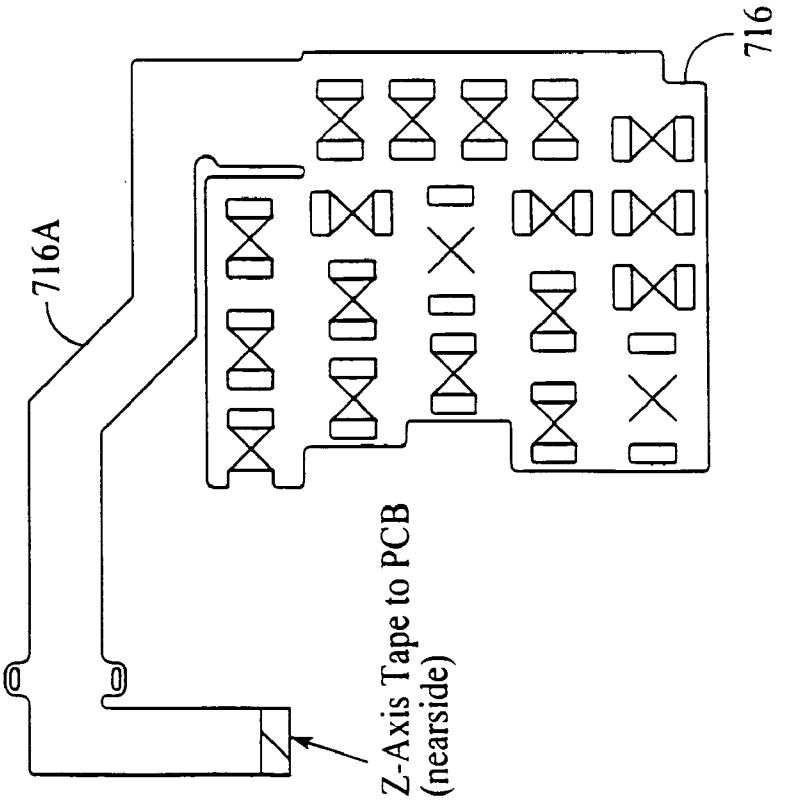


FIG. 29A

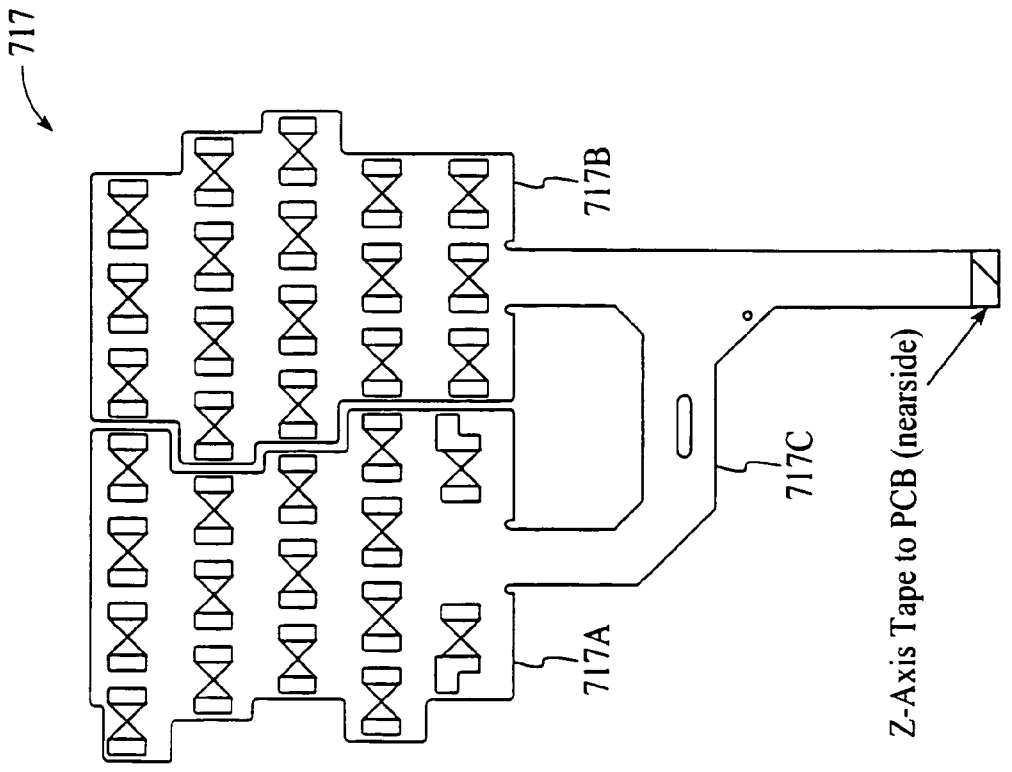


FIG. 30A

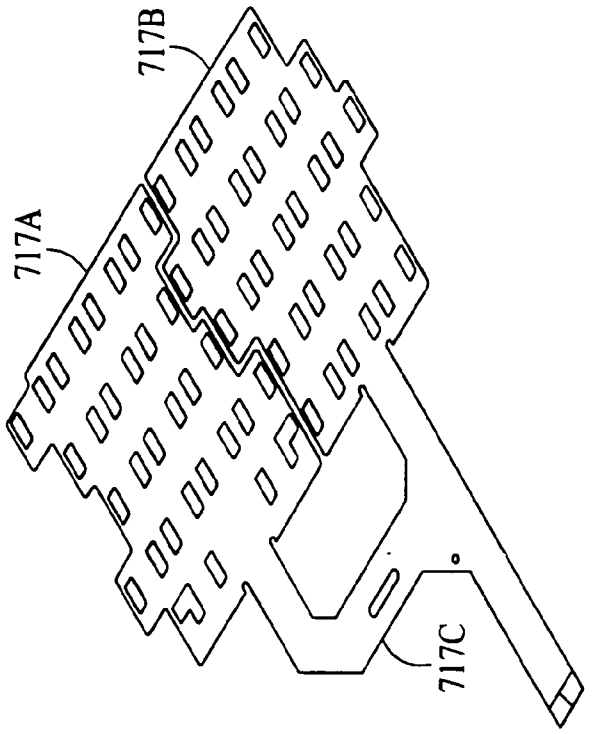


FIG. 30B

FIG. 31A

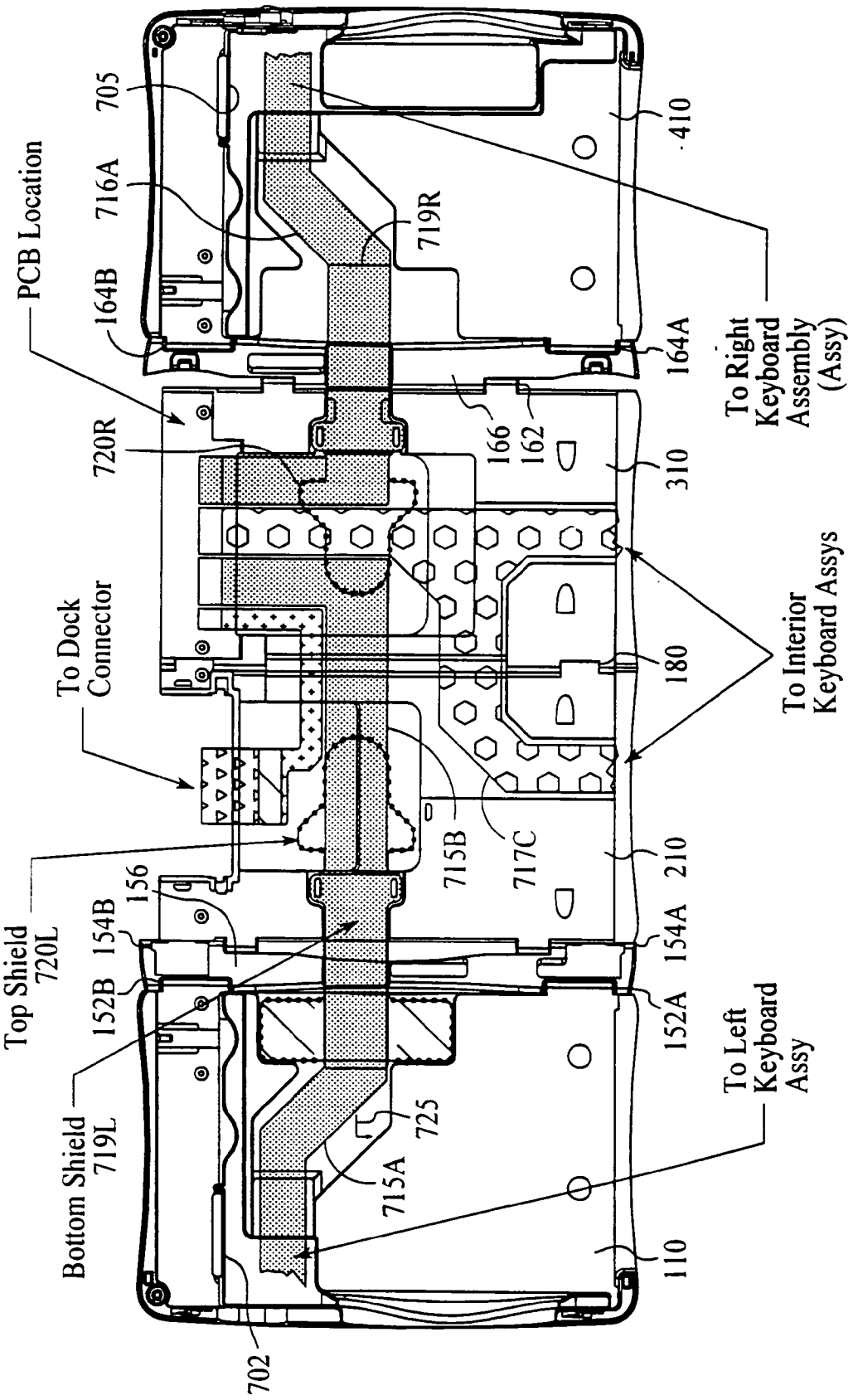
PCB Location
705
716A
164B
719R
410
To Right Keyboard Assembly (Assy)
164A
720R
166
162
310
To Dock Connector
180
To Interior Keyboard Assys
715B
717C
210
Top Shield 720L
156
154B
154A
152B
152A
To Left Keyboard Assy
Bottom Shield 719L
725
715A
110
702

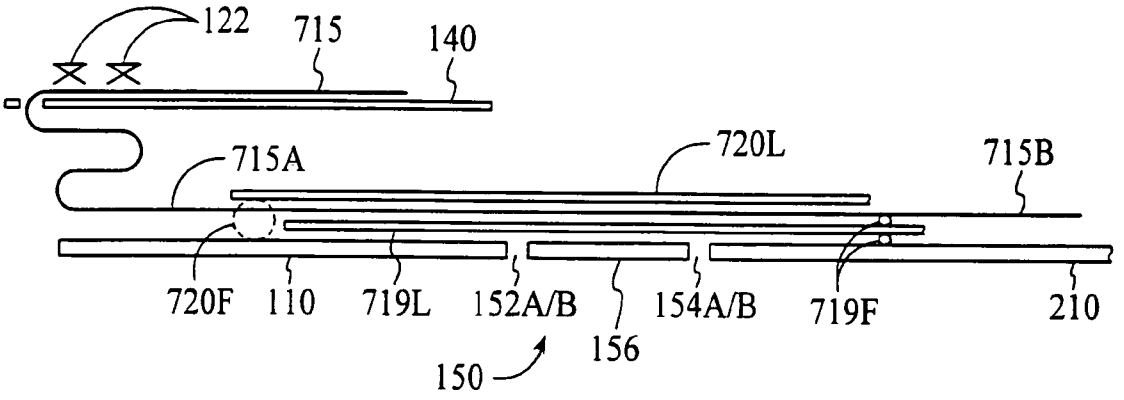
122
715
140
715A
720L
715B
720F
110
719L
152A/B
154A/B
719F
210
156
150

FIG. 31B

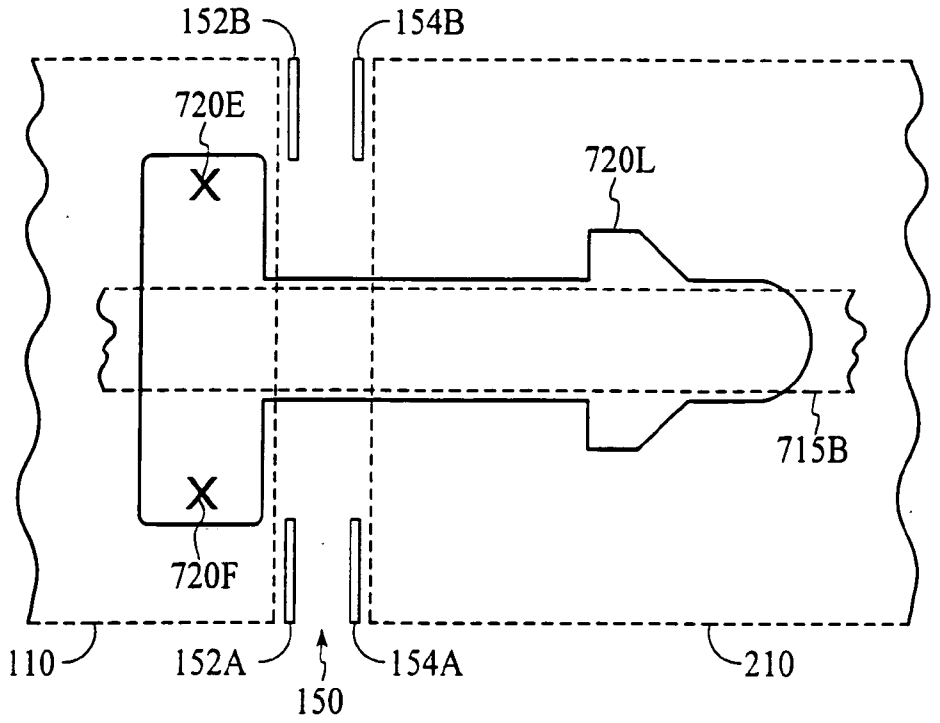


FIG. 31C

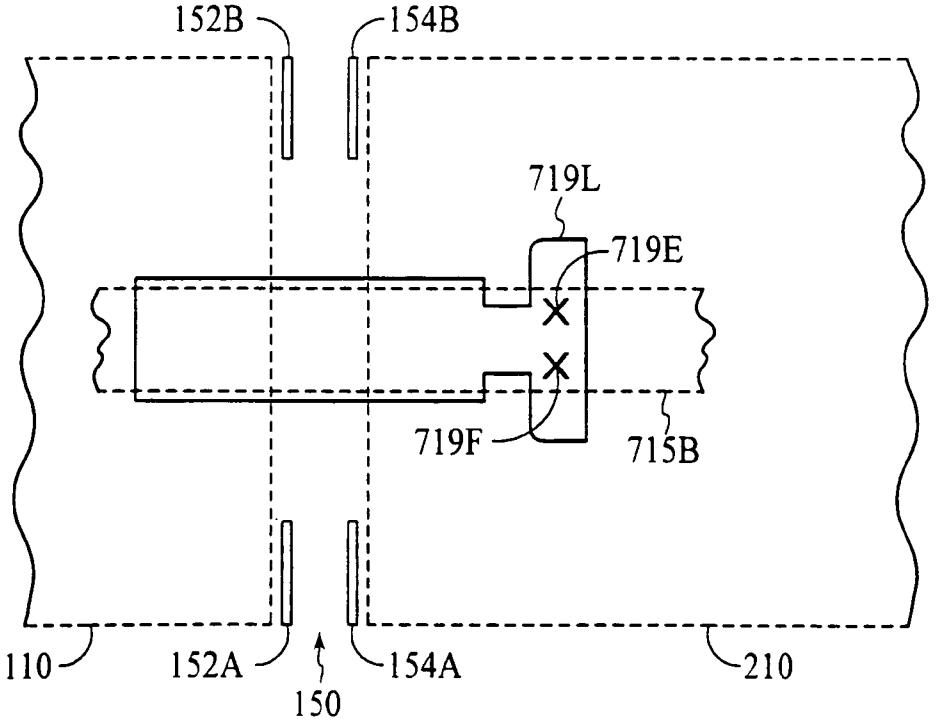


FIG. 31D

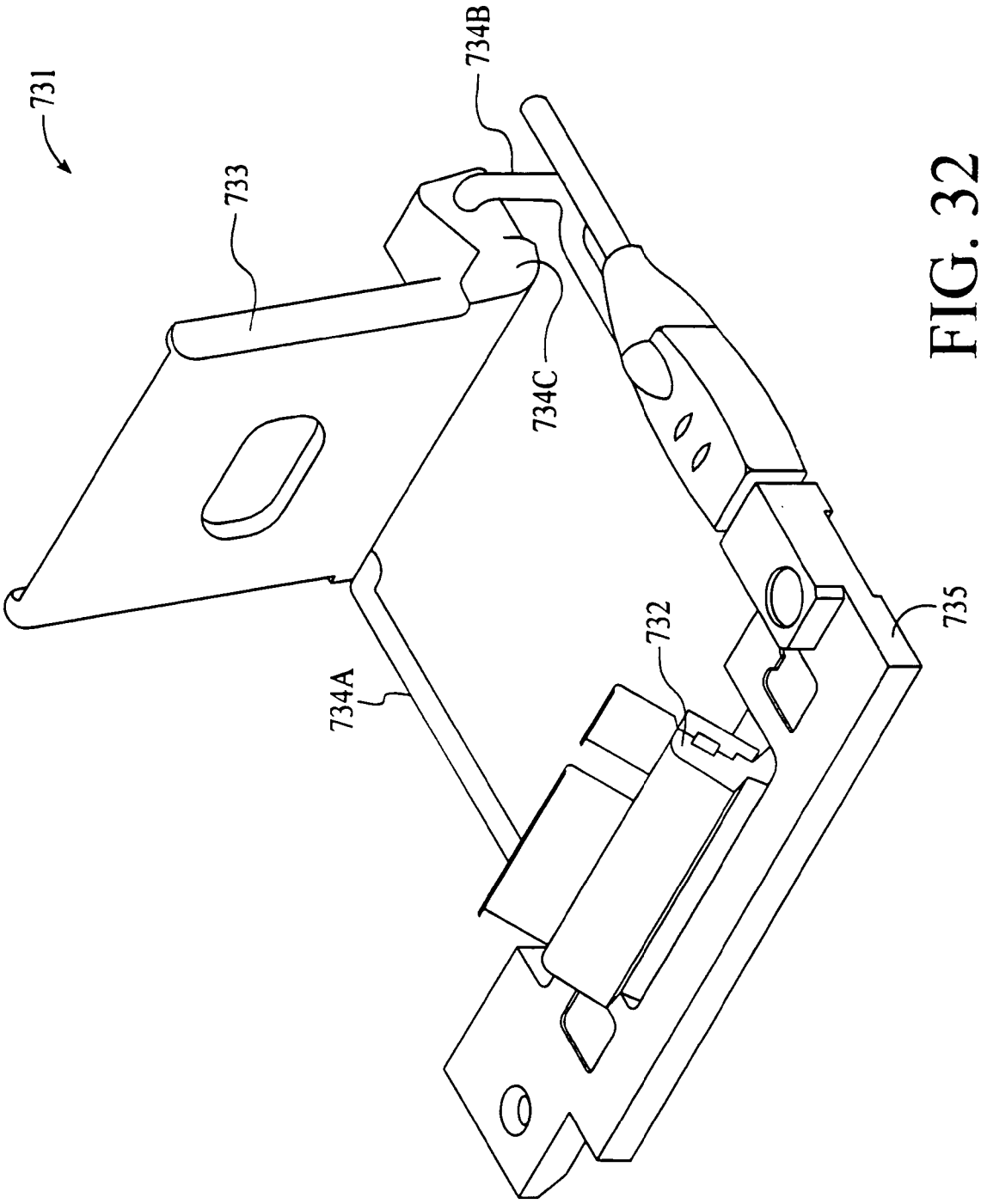


FIG. 32

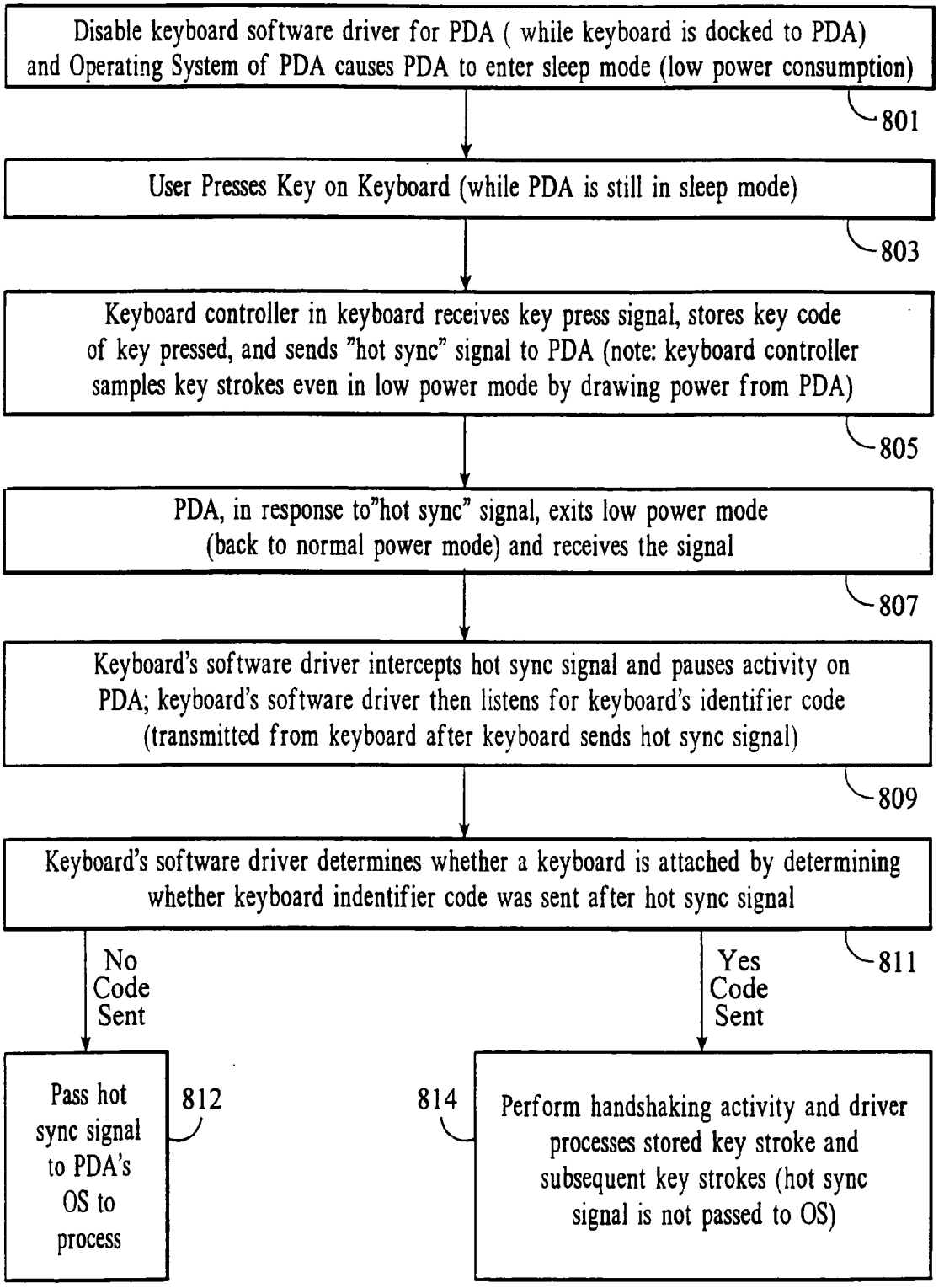
Disable keyboard software driver for PDA ( while keyboard is docked to PDA) and Operating System of PDA causes PDA to enter sleep mode (low power consumption)
801
User Presses Key on Keyboard (while PDA is still in sleep mode)
803
Keyboard controller in keyboard receives key press signal, stores key code of key pressed, and sends "hot sync" signal to PDA (note: keyboard controller samples key strokes even in low power mode by drawing power from PDA)
805
PDA, in response to"hot sync" signal, exits low power mode (back to normal power mode) and receives the signal
807
Keyboard's software driver intercepts hot sync signal and pauses activity on PDA; keyboard's software driver then listens for keyboard's identifier code (transmitted from keyboard after keyboard sends hot sync signal)
809
Keyboard's software driver determines whether a keyboard is attached by determining whether keyboard indentifier code was sent after hot sync signal
811
No Code Sent
Yes Code Sent
Pass hot sync signal to PDA's OS to process
812
814
Perform handshaking activity and driver processes stored key stroke and subsequent key strokes (hot sync signal is not passed to OS)

FIG. 33

# FOLDABLE KEYBOARD

## FIELD OF THE INVENTION

[0001] The invention relates generally to keyboard assemblies for information devices, and more particularly to foldable keyboards for such devices.

## BACKGROUND OF THE INVENTION

[0002] Small portable computers such as "palmtops" can be conveniently carried in a pocket. Recent advances in shrinking the size of electronic components will soon allow these devices to perform all the functions of today's desktop computers. Additionally, a whole new category of "information appliances" has begun. These include portable wireless telephone/computers which can be used to access the Internet to send and receive e-mail and to interact on the World Wide Web. Also, personal digital assistant (PDA's) are becoming more and more popular.

[0003] Powerful and versatile as these devices are becoming, their use is greatly limited by non-existent or inadequate keyboards. Palmtops which rely on handwriting recognition have proven to be awkward, slow and error prone. Miniature keyboards commensurate with the size of small appliances are likewise frustrating, especially if the user needs to write something consisting of a few sentences or more. Voice recognition suffers from frequent errors and creates a lack of privacy when other people are near the speaker whose voice is being recognized. Further, voice recognition may not be used in all circumstances (e.g. the process of taking notes of a lecturer's lecture in an otherwise quiet auditorium may not be possible with voice recognition input systems but it is usually possible with a keyboard).

[0004] Keyboards for desktop and high quality laptop computers allow the user to comfortably, privately, quietly, and quickly "touch-type." They have a number of desirable features in common. Most keyboards have a standard "QWERTY" layout which requires no learning on the part of the user (once the user has become familiar with this layout). The keys, which usually number **84** for a laptop computer, have full-sized tops whose center-to-center spacing is about 0.75 inches for both the horizontal and vertical axes. The length of the keyboard (the distance from the left edge of the left-most key to the right edge of the right-most key) is about 11 inches. Any reduction in this spacing has proven to slow down and frustrate the touch-typist. Additionally, the keys of these keyboards have sufficient "travel," the distance the key moves when it is pressed, and tactile feedback, an over-center buckling action, that signals the user that the key has been pressed sufficiently.

[0005] Efforts have been made to provide keyboards that contain these features, yet collapse to a reduced size. Some designs only slightly reduce the size of "notebook" computers when folded. These are much larger than palmtop computers. IBM's "ThinkPad 701C" notebook computer folds in a single operation to reduce the keyboard case length (measured from the edges of its case) from 11.5 inches to 9.7 inches. Also see U.S. Pat. No. 5,543,787 which describes a foldable keyboard. U.S. Pat. No. 5,519,569 describes a keyboard which folds in multiple steps from a length of 10-11 inches to 6.125 inches. U.S. Pat. No. 5,654,872 describes a keyboard with keys that collapse when the lid is dosed to allow a thinner notebook computer.

[0006] Other designs of keyboards include those where the keyboard is hinged at the center of its length and folds about a vertical axis. U.S. Pat. No. 5,457,453 describes a keyboard that folds to greater than half its length. U.S. Pat. No. 5,574,481 describes a keyboard that folds in half and appears to have a non-standard layout of keys (the keys on the center fold axis have edges which lie in a straight line). U.S. Pat. No. 5,653,543 describes a keyboard that folds in half. U.S. Pat. No. 5,502,460 describes a keyboard with two vertical hinges that folds to greater than half its unfolded length.

[0007] U.S. Pat. Nos. 5,044,798 and 5,141,343 describe keyboards whose keys have user-selectable variable spacing. These designs have non-standard layouts (e.g., the "Enter" key is rotated ninety degrees) and no self-containing housing.

[0008] Reducing the size of a keyboard by folding it is a challenging task because of the physical limitations of the materials that make up the parts of the keyboard assembly. For example, the keys usually include a plastic keytop having a thickness and a spring or support member below the keytop that has a height. The key is typically mounted to a base or a platform that includes a panel such as a printed circuit board or a membrane, which also has a thickness. A housing is usually provided to carry the key and its base and panel. The housing also has a thickness. The folded keyboard can be considerably thick when all the thicknesses and heights are added together and multiplied by the number of sections which are folded or stacked on one another. Advances have been made in the materials used for the parts of the keyboard to provide thinner plastic wall sections, for example. However, consumers desire portable devices that are sturdy and large enough to be easily used, yet can be conveniently carried or stored without taking up a large amount of space.

[0009] Keyboards electrically communicate information to information appliances. Most keyboards have printed circuit boards or membranes located underneath their keys. When a key is pressed it shorts the circuits in a particular column or row. The matrix of columns and rows that make up a keyboard is continually scanned by a controller to determine which keys have been pressed. Such an arrangement is described, for example, in U.S. Pat. No. 5,070,330. The electronic configuration of most keyboards thus necessitates a matrix of conductors that limits the collapsing of the keyboard to a certain size.

## SUMMARY OF THE INVENTION

[0010] The present invention provides, in one embodiment, a foldable keyboard that includes keyboard sections that carry sets of keys on a frame. The frame provides a self-contained case for the keyboard assembly in its folded position. A standard key layout can be provided that is split between keyboard sections along a staggered line between adjacent sections. Each keyboard section includes a key set which includes a plurality of keys.

[0011] Through a unique hinge configuration and movable key sets in one embodiment, a foldable keyboard assembly is provided that folds into a small, portable package. The keyboard assembly can provide a standard size key layout which can be folded into a package small enough to fit into a shirt pocket, for example.

[0012] Numerous examples, aspects and embodiments of the invention are shown and described herein.

## BRIEF DESCRIPTION OF THE DRAWINGS

[0013] The present invention is illustrated by way of example and not limitation in the figures of the accompanying drawings, in which like references indicate similar elements and in which:

[0014] **FIG. 1** is a perspective view of an embodiment of the keyboard assembly in its unfolded position and with an information device mounted thereto;

[0015] **FIG. 2** is a plan view of a keyboard layout;

[0016] **FIG. 3** is a perspective view of an embodiment of the keyboard assembly in its unfolded position;

[0017] **FIG. 4** is a perspective view of the keyboard assembly showing key sets moved laterally;

[0018] **FIG. 5***a* is a perspective view of the keyboard assembly showing keyboard sections partially folded;

[0019] **FIG. 5***b* is a perspective view of the keyboard assembly in a partially folded state;

[0020] **FIG. 5***c* is an elevational view of an embodiment of the keyboard assembly in its unfolded position with key sets in their operating positions;

[0021] **FIG. 5***d* is an elevational view of the keyboard assembly of **FIG. 5***c* with key sets moved laterally;

[0022] **FIGS. 5***e* and **5***f* show the keyboard assembly of **FIG. 5***c* in partially folded positions;

[0023] **FIG. 5***g* shows the keyboard assembly of **FIG. 5***c* in its fully folded position;

[0024] **FIG. 6***a* is a plan view of an embodiment of a keyboard assembly in accordance with the present invention;

[0025] **FIG. 6***b* is an elevational view of the keyboard assembly of **FIG. 6***a* showing keyboard sections in a partially folded position;

[0026] **FIG. 6***c* is an elevational view of the keyboard assembly of **FIG. 6***a* showing keyboard sections partially folded in an opposite direction, and **FIGS. 6***d* and **6***e* show an example of a mechanism which resists movement in this opposite direction but does allow it if there is sufficient force;

[0027] **FIG. 7** is a perspective view of the keyboard assembly of **FIG. 2** in a partially folded position;

[0028] **FIG. 8** is a front perspective view of the keyboard assembly of **FIG. 7** in a completely folded position;

[0029] **FIG. 9** is a rear perspective view of the keyboard assembly of **FIG. 7** in a completely folded position;

[0030] **FIG. 10** is a plan view of the keyboard assembly;

[0031] **FIG. 11** is a side elevational view of the keyboard assembly;

[0032] **FIG. 12** is an end view of the keyboard assembly;

[0033] **FIG. 13** is an opposite side elevational view of the keyboard assembly;

[0034] **FIG. 14** is an opposite end view of the keyboard assembly;

[0035] **FIG. 15***a* is an enlarged partial sectional view of a key of the keyboard assembly;

[0036] **FIG. 15***b* is an enlarged partial sectional view of the key of **FIG. 15***a* in a depressed position;

[0037] **FIG. 16** is an enlarged partial perspective view of the keyboard assembly showing a connector assembly;

[0038] **FIG. 17** is a rear perspective view of the keyboard assembly in a partially folded position;

[0039] **FIG. 18** is a rear perspective view of the keyboard assembly in an unfolded position;

[0040] **FIG. 19** is a rear perspective view of the keyboard assembly in an unfolded position and showing connector assembly extended and unfolded;

[0041] **FIG. 20***a* is a perspective view of the connector assembly in an unfolded position;

[0042] **FIG. 20***b* is a perspective view of the connector assembly in a folded position;

[0043] **FIG. 20***c* is a perspective view of the connector assembly in a partially unfolded position;

[0044] **FIG. 21** is a plan view of a flexible circuit of the keyboard assembly;

[0045] **FIG. 22** is a plan view of a flexible circuit of the keyboard assembly;

[0046] **FIG. 23** is a partial broken perspective view of the keyboard assembly showing the flexible circuit in a folded position;

[0047] **FIG. 24** is a partial perspective view of the flexible circuit of the keyboard assembly;

[0048] **FIG. 25** is an enlarged partial sectional view of the keyboard assembly showing the flexible circuit;

[0049] **FIG. 26** shows an exploded view of one embodiment of a collapsible keyboard according to the present invention;

[0050] **FIGS. 27***a,* **27***b,* and **27***c* show, through side views, three different positions of a set of slidable keys relative to a double hinge on a collapsible keyboard according to one embodiment of the invention;

[0051] **FIGS. 28***a* and **28***b* show an example of a flexible printed circuit for use with a left outer section of a four section keyboard according to one embodiment of the invention;

[0052] **FIGS. 29***a* and **29***b* show an example of a flexible printed circuit for use with a right outer section of a four section keyboard;

[0053] **FIGS. 30***a* and **30***b* show an example of a flexible printed circuit for use with the two interior sections of a four section keyboard according to one embodiment of the present invention;

[0054] **FIG. 31***a* shows a top view of a four section keyboard according to one embodiment; in this view, the four different sets of keys and their corresponding faces have been removed in the top view shown in **FIG. 31***a* in order

to show portions of the flexible printed circuit and the corresponding dressings of these flexible printed circuits around the hinges of the four section keyboard;

[0055] **FIG. 31***b* shows a side/cross-sectional view taken along line **725** of **FIG. 31***a;* this side/cross-sectional view shows further details concerning the manner of dressing the flexible printed circuit in the area of a double hinge;

[0056] **FIGS. 31***c* and **31***d* show further details concerning the dressing of the flexible printed circuit around the area of a double hinge according to one embodiment of the present invention;

[0057] **FIG. 32** shows an example of another embodiment of a connection and support docking member which may be used with a collapsible keyboard in one embodiment of the present invention;

[0058] **FIG. 33** is a flowchart showing an example of a method in which a collapsible keyboard according to the present invention may reactivate a personal digital assistant which has entered a sleep mode; this reactivation of the personal digital assistant (PDA) occurs by pressing a key on the keyboard after a software driver for the keyboard on the PDA has been deactivated according to one embodiment of the present invention.

## DETAILED DESCRIPTION

[0059] The invention relates to a keyboard assembly. Specific details of various embodiments of the keyboard assembly are described below. Numerous specific details including keyboard layouts, specific structural arrangements and relationships, etc. are presented in order to provide a thorough understanding of the invention. It is to be appreciated that these specific details need not be specifically employed to practice the invention.

[0060] **FIG. 1** shows a top perspective view of an embodiment of the keyboard assembly **50** of the invention. The keyboard assembly **50** is shown with an example of an information device **60** (e.g. a PDA such as a Palm PDA from Palm Computing) mounted thereto.

[0061] **FIG. 2** illustrates an example of a keyboard key layout that can be used with the present invention. The lettering and symbols shown on the keys in **FIG. 2** are provided for illustrative purposes only. **FIG. 2** shows dividing line A between first key set **120** and second key set **220**, dividing line B between second key set **220** and third key set **320**, and dividing line C between third key set **320** and fourth key set **420**. The dividing lines A, B, and C illustrate that the a standard keyboard layout has staggered rows of keys.

[0062] As described in further detail below, each key set includes a plurality of keys. The keys are preferably arranged in a standard QWERTY similar layout. The keys are divided into key sets along staggered dividing lines between key sets because the keys are not arranged in straight columns in a standard QWERTY keyboard. Each of first through fourth key sets is associated with a corresponding one of first through fourth keyboard sections described below.

[0063] Of course, the present invention can alternatively be embodied in non-QWERTY layouts such as, for example, key layouts designed for a special purpose devices including workstations, information devices, cellular telephones, or software packages. While the present invention can be embodied in a full-size or standard size keyboard having a 19 millimeter pitch between keys, a reduced size keyboard can also embody the present invention, i.e. a scaled-down version of the foldable keyboard is contemplated.

[0064] **FIG. 3** shows a top perspective view of the keyboard assembly **50** of **FIG. 1** without the information device **60** attached. In **FIG. 2**, the keyboard assembly **50** is shown in its open and ready state.

[0065] **FIG. 3** shows the keys of the keyboard in their operating position. The keyboard assembly **50** is foldable as described in detail below. In order to accomplish the folding of the keyboard assembly **50**, the keys of the keyboard are preferably divided into four key sets. The keyboard assembly **50**, shown in **FIG. 3**, is divided into four keyboard sections. **FIG. 3** shows first keyboard section **100** next to second keyboard section **200**, which in turn is next to third keyboard section **300**, which in turn is also next to fourth keyboard section **400**.

[0066] As shown in **FIG. 3**, keyboard assembly **50** is shown in its unfolded position **102**. First keyboard section **100** is shown as the left-most section. First keyboard section **100** includes a first frame **110**. First frame **110** has first key set **120** on top side **112** of first frame **110**. First key set **120** includes a plurality of first keys **122** arranged in a plurality of first rows **124**. First keyboard section **100** is illustrated in **FIG. 3** in its operating position **126** which is the position adjacent second keyboard section **200**. Also, first keyboard section **100** is attached in a plane to second keyboard section **200** when the first keyboard section **100** is in operating position **126**.

[0067] **FIG. 3** also shows second keyboard section **200** which includes second frame **210**. A second key set **220** is on the top side **212** of the second frame **210**. Second key set **220** includes a plurality of second keys **222** arranged in a plurality of second rows **224**.

[0068] Similarly, a third keyboard section **300** is shown in **FIG. 3** attached to second keyboard section **200**. Third keyboard section **300** is generally in a plane relative to second keyboard section **200** when keyboard assembly **50** is unfolded. Third keyboard section **300** also includes a third frame **310**. A third key set **320** is on the third frame **310**. Third key set **320** includes a plurality of third keys **322**, which are also arranged in a plurality of third rows **324**.

[0069] Fourth keyboard section **400** is shown as the right-most keyboard section of keyboard assembly **50** in **FIG. 3**. Fourth keyboard section **400** includes a fourth frame **410** which has a fourth key set **420** on its top side **412**. Fourth key set **420** includes a plurality of fourth keys **422** arranged in a plurality of fourth rows **424**. Fourth keyboard section **400** is attached in a plane to third keyboard section **300** when fourth keyboard section **400** is in an operating position **426**.

[0070] **FIGS. 4, 5***a,* and **5***b* show keyboard assembly **50** in various intermediate positions between the unfolded position shown in **FIG. 3** and before the assembly is completely folded.

[0071] **FIG. 4** shows first key set **120** and fourth key set **420** in their respective separated positions **128** and **428** after having been moved laterally relative to the first frame **110**

and the fourth frame **410**, respectively. **FIG. 4** also shows first hinge **150** connecting first keyboard section **100** to second keyboard section **200**. Second hinge **160** is shown connecting keyboard section **300** to keyboard section **400**.

[**0072**] As shown in **FIG. 4**, first key set **120** and fourth key set **420** are laterally movable with respect to first frame **110** and fourth frame **410**, respectively. When the keyboard assembly **50** is placed in its unfolded position, first key set **120** and fourth key set **420** are moved laterally inwardly toward the second key set **220** and the third key set **320**, respectively (see **FIG. 3**). In the operating position, in which first and fourth key sets **120** and **420** are moved inwardly, first key set **120** is positioned over first hinge **150**, and fourth key set **420** is positioned over second hinge **160** (**FIG. 3**). The first keyboard section **100** and fourth keyboard section **400** thus prevent the keyboard from being folded at first and second hinges **150** and **160**. First key set **120** and fourth key set **420** are laterally moved outwardly by the operator of the keyboard in preparation for folding the keyboard. As first and fourth key sets are moved laterally outwardly, first and second hinges **150** and **160** are exposed. When first and second hinges **150** and **160** are exposed, a gap is created between adjacent key sets (i.e. between the first and second key sets **120** and **220** and between the third and fourth key sets **320** and **420**). When the gap is created, the first and fourth keyboard sections **100** and **400** can be folded toward their respective second and third keyboard sections **200** and **300**. The staggered edge of each of the first and fourth key set that is adjacent to the first or second hinge, respectively, remains staggered, but is moved away from the hinge to allow the keyboard section to be folded about its respective hinge. The staggered edge of each of the second and third key set that is adjacent to the first or second hinge, respectively, also remains staggered. In the embodiment shown in **FIG. 4**, the break between the first key set **120** and the second key set **220** is located such that the staggered edge of the second key set **220** is inward with respect to the first hinge **150**. Likewise, the break between the third key set **320** and located such that the staggered edge of the third key set **320** is inward with respect to the second hinge **160**. A gap is created between the adjacent key sets so that the adjacent sections can be folded with respect to each other. The lateral movement of key sets **120** and **420** to their respective separated positions allows the respective top sides of the adjacent keyboard sections to be folded toward each other. Preferably, the pivot points of the double hinges **150** and **160** correspond to the bottom sides of the frames.

[**0073**] **FIGS. 27***a*, **27***b* and **27***c* show the lateral movement of a first set of keys on a first base **140** relative to the first frame **110** and the hinge member **156** which includes at least two axles **152***a* and **154***a*. **FIG. 27***a* shows the base **140** positioned to allow the keyboard to be collapsed as the base **140** with its set of keys has been moved laterally by sliding the base **140** away from the base **240** to open up the region around the double hinges which include the axles **152***a* and **154***a*. **FIG. 27***c* shows the first base having been moved next to the second base **240** such that it now covers the double hinge area which includes the hinge member **156** and the axles **152***a* and **154***a*. In this position, the keyboard is ready for use (although there is nothing preventing the keyboard from being used in one embodiment when the base **140** is positioned as shown in FIGS. **27***b* or **27***a*). **FIG. 27***b* shows the base **140** in an intermediate position between the positions shown in **FIGS. 27***a* and **27***c*. Thus, as shown in **FIGS. 27***a*, **27***b* and **27***c*, the first base **140** may be moved relative to the double hinge area and the second base **240** to allow for the keyboard to be collapsed in one configuration shown in **FIG. 27***a* and moved into a use position as shown in **FIG. 3** in which the first key set on the base **140** is adjacent to the second key set on the base **240** as shown in **FIGS. 3 and 27***c*.

[**0074**] **FIG. 5***a* shows first keyboard section **100** detached from second keyboard section **200** and being folded toward second keyboard section **200**. Also, fourth keyboard section **400** is shown detached from third keyboard section **300** and being folded toward third keyboard section **300**. First and fourth keyboard sections **100** and **400** can be considered to be attached to their respective adjacent second and third keyboard sections **200** and **300** when their adjacent edges are either in contact or cooperating when the keyboard assembly is in the unfolded position, as shown in **FIG. 2**. The keyboard sections are considered detached from each other when they are moved to a relative position other than coplanar such that their adjacent edges are no longer in contact or cooperating even though they may be hingedly connected. Also, the keyboard sections can be completely physically detached from each other and yet folded over each other when the keyboard is in its folded state.

[**0075**] **FIG. 5***b* shows second keyboard section **200** and third keyboard section **300** in a partially folded position relative to each other.

[**0076**] Thus, the method of folding the keyboard assembly **50** includes moving first key set **120** laterally away from second key set **220**, moving fourth key set **420** laterally away from third key set **320**, folding first keyboard section **100** toward second keyboard section **200**, folding fourth keyboard section **400** toward third keyboard section **300**, and folding keyboard sections **200** and **300** toward each other. The method can further include compressing the keys either partially or completely (or the biasing members below the keytops) as described in further detail below, resulting in an electrical shorting in each compressed key.

[**0077**] The embodiment shown in **FIG. 5***b* shows first and second keyboard sections **100** and **200** folding top side to top side. Also, third and fourth keyboard sections **300** and **400** are shown folding top side to top side. **FIG. 5***b* also shows second and third keyboard sections **200** and **300** folding bottom side to bottom side. Of course, any combination of folding adjacent sections top side to top side, bottom side to bottom side, or top side to top side may be provided with different hinge configurations.

[**0078**] **FIGS. 5***c* through **5***g* show one such configuration. Keyboard assembly **50** is shown in an unfolded position in **FIGS. 5***c* and **5***d*. **FIG. 5***c* shows first keyboard section **100**, second keyboard section **200**, third keyboard section **300**, and fourth keyboard section **400** in a plane. First keyboard section **100** has a first top side **112**, second keyboard section **200** has a second top side **212**, third keyboard section **300** has a third top side **312**, and fourth keyboard section **400** has a fourth top side **412**. **FIG. 5***c* also shows first key set **120**, second key set **220**, third key set **320**, and fourth key set **420** in an operating position on keyboard assembly **50** wherein each key set is relatively close to an adjacent key set.

[**0079**] **FIG. 5***d* shows that each key set is moved laterally to a separated position with respect to adjacent key sets in

preparation for folding of the assembly **50**. Each key set is moved to a location generally aligned with its corresponding keyboard section. For example, fourth key set **420** is shown moved laterally to its separated position on fourth keyboard section **400**.

[**0080**] **FIGS. 5***e* through **5***g* show keyboard assembly **50** in various stages of being folded. Keyboard assembly **50** is folded by first folding a first keyboard section **100** (or frame) having a first top side **112** and a first bottom side **114** and carrying a first key set **120** over a second keyboard section **200** (or frame) having a second top side **212** and a second bottom side **214** and carrying a second key set **220** such that the first top side **112** faces the second top side **212** (**FIG. 5***e*). Then, the first and the second sections are together folded over a third keyboard section **300** (or frame) having a third top side **312** and a third bottom side **314** and carrying a third key set **320** such that the first bottom side **114** faces the third top side **312** (**FIG. 5***f*). Next, the first, second, and third keyboard sections are together folded over a fourth keyboard section **400** (or frame) having a fourth top side **412** and carrying a fourth key set **420** such that the second bottom side **214** faces the fourth top side **412** (**FIG. 5***g*). As described above, first, second, third, and fourth key sets include a plurality of keys that can be substantially compressed when assembly **50** is in the folded position as in **FIG. 5***g*.

[**0081**] Referring again to **FIG. 5***b*, a top perspective view is shown of keyboard assembly **50** in a partially open, i.e. partially folded, position. The top side **112** of the first frame **110** is shown in **FIG. 5***b* as being folded toward top side **212** of second frame **210**. In the embodiment illustrated in **FIG. 5***b*, the first keyboard section **100** is pivotally attached to the second keyboard section **200**. Second keyboard section **200** is in turn pivotally attached to third keyboard section **300** by center hinge **180**. As shown in **FIG. 5***b*, second frame **210** is pivoted toward third frame **310** such that bottom side **214** of second frame folds toward bottom side **314** of third frame **310**.

[**0082**] Also shown in **FIG. 5***b* is the fourth keyboard section **400** being folded toward third keyboard section **300** such that top side **412** of fourth frame **410** is folded toward top side **312** of frame **310**. Third keyboard section **300** is preferably pivotally attached to fourth keyboard section **400** by second hinge **160**.

[**0083**] Referring again to **FIGS. 4 and 5***b*, first key set **120** and fourth key set **420** are moved laterally with respect to first frame **110** and fourth frame **410**, respectively. The first and fourth key sets are moved laterally so that the keyboard assembly can be folded between the first keyboard section and the second keyboard section and also between the third keyboard section and the fourth keyboard section. In the preferred embodiment, first hinge **150** and second hinge **160** are double axle hinges. Hinge **150** includes a first hinge member **156** between its axles. First hinge **150** includes first hinge member **156** between its axles, and second hinge **160** includes second hinge member **166** between its axles.

[**0084**] In the example shown in **FIGS. 5***a* and **5***b*, first keyboard section **100** is folded toward second keyboard section **200** and fourth keyboard section **400** is folded toward third keyboard section **300**. In the case of the second keyboard section **200** and its adjacent third keyboard section **300**, the staggered break between second key set **220** and third key set **320** is generally located above the axis of center hinge **180**. Since center hinge **180** is a single axle hinge, and the pivot axis of center hinge **180** is aligned with the bottom sides **214** and **314**, the bottom side **214** of second frame **210** can be folded toward the bottom side **314** of third frame **310**. When second frame **210** and third frame **310** are completely folded, bottom sides **214** and **314** preferably are in contact against each other.

[**0085**] **FIGS. 6***a* and **6***b* illustrate an embodiment of keyboard assembly **52** in which two outer keyboard sections are folded over an inner keyboard section. A first keyboard section **100** includes a plurality of first keys **122**. Each of the plurality of first keys **122** has a first keytop **123**. A second keyboard section **200** is provided which includes a plurality of second keys **222**, each of the plurality of second keys **222** has a second keytop **223**. A third keyboard section **300** is attached to the second keyboard section **200**. The third keyboard section **300** includes a plurality of third keys **322**. Each of the plurality of third keys **322** has a third keytop **323**.

[**0086**] **FIGS. 6***a* and **6***b* illustrate the first keyboard section **100** being folded over such that the plurality of first keys **122** will face the plurality of second keys **222** once the first keyboard section **100** is completely folded. Also the third section **300** is preferably attached to the opposite side of the second keyboard section **200** in a similar manner as that of the first keyboard section **100**. In one embodiment, the first keyboard section **100** and the third keyboard section **300** are detachable from the second keyboard section **200** such that the first and third keyboard sections **100** and **300** can be moved to a storage position in which the first keytops **123** and third keytops **323** contact the second keytops **223** of the second keyboard section **200**.

[**0087**] Each of the plurality of keys of each of the first, second and third keyboard sections includes a biasing member under each respective keytop. The biasing members provide a biasing force that pushes upwardly on each key. When the keyboard sections are detached from each other and moved to a storage position, or when the keyboard sections are folded over each other such that the respective keytops contact each other, the biasing members under the keys can be compressed in order to provide a folded package having a minimal thickness.

[**0088**] **FIGS. 6***c*, **6***d* and **6***e* show an example of an embodiment of the present invention in which movement of the outer sections in a direction opposite to that shown in **FIG. 5***a* is permitted. **FIG. 6***c* shows an example of a four section keyboard after movement in this opposite direction. **FIGS. 6***d* and **6***e* show an example of a mechanism for resisting this movement in order to keep the keyboard generally flat in use but which will allow movement in this opposite direction in order to preserve the mechanics of the keyboard without breaking the keyboard. As shown in **FIGS. 6***d* and **6***e* (which show only the left outer section and one of the interior sections of a multiple section keyboard), the first frame **110** includes a hinge element which contains an axle **152***a* and a ridge **156***a* which is designed to engage the hinge member **156**. Under normal, non-excessive pressures, the hinge member **156** engages the ridge **156***a* such that movement beyond the position shown in **FIG. 6***d* is resisted by the engagement of the ridge **156***a* with the hinge member **156**. However, if sufficient force is applied in the

opposite direction, then the ridge **156***a* will move past the hinge member **156**, allowing the first frame **110** to be moved downwardly into the position shown in **FIG. 6***e* or **6***c*.

[**0089**] **FIG. 7** shows keyboard assembly **50** in a nearly closed position. First keyboard section **100**, second keyboard section **200**, third keyboard **300**, and fourth keyboard section **400**, are each shown folded with respect to their respective adjacent keyboard sections. Bottom side **114** of first frame **110** provides a protective wall for the keyboard assembly **50** in its folded or storage position. Similarly, bottom side **414** (not shown) provides a protective wall or surface for the opposite side of the keyboard assembly **50** in its storage or folded position. First hinge member **156** and second hinge member **166** provide side wall portions for the folded assembly.

[**0090**] **FIG. 7** shows certain details with respect to the positions of the axles relative to both double hinge members. It can be seen from **FIG. 7** as well as **FIGS. 9, 11, 12**, and **14** how the hinge points nest tightly together to form a substantially enclosed container when the keyboard is completely collapsed. **FIG. 7** shows the keyboard before it is completely collapsed while **FIGS. 9, 11, 12** and **14** show the keyboard in its completely collapsed form. The double hinge member between the first frame **110** and the second frame **210** includes a hinge member **156** which is coupled to four axles as shown in **FIG. 7**. Axles **152***a* and **152***b* are disposed in cylindrical openings on the first frame **110**. These axles are also partially disposed in cylindrical openings in the hinge member **156**. The hinge member **156** is coupled to the second frame **210** by the two axles **154***a* and **154***b* which are disposed in cylindrical openings of the hinge member **156** and in cylindrical openings of the second frame **210** in order to secure the hinge member **156** to the second frame **210**. As can be seen from **FIG. 7**, there is an opening in the hinge member **156** which is designed to match a protrusion in the second hinge member **166** which protrusion includes an axle **162** that extends through cylindrical openings in the third frame **310** as well as cylindrical openings in the second hinge member **166** in order to secure the second hinge member **166** to the third frame **310**. The second hinge member **166** also includes a cylindrical opening to receive the axles **164***a* and **164***b* which are also disposed within cylindrical openings in the fourth frame **410**. It can be seen from **FIGS. 12 and 14** that the axles **154***a,* **154***b* and **162** line up substantially in a plane with the axle **180** when the keyboard is in the substantially collapsed configuration. **FIG. 17** provides a further view of the manner in which the hinge points which include the associated axles nest when closing the four section keyboard shown in **FIGS. 7 and 17**.

[**0091**] **FIG. 8** shows a top front perspective view of the keyboard assembly **50** in its completely folded position **104**. Keyboard assembly **50** in its completely folded position **104** presents a self contained enclosure that is comprised of portions of the frames of each keyboard section. For example, first frame **110** includes sidewall **116** extending generally perpendicularly from the bottom side **114** of first frame **110**. Similarly, fourth frame **410** includes fourth sidewall **416** extending generally perpendicularly from the bottom side (not shown) of fourth frame **410**. Second frame **210** and third frame **310** also include sidewalls **216** and **316**. The sidewalls of each frame cooperate when keyboard assembly **50** is completely folded to provide a generally enclosed case or housing for keyboard assembly **50**.

[**0092**] **FIG. 9** shows a top rear perspective view of keyboard assembly **50** in its completely folded position **104**. First hinge member **156** and second hinge member **166** cooperate as shown in **FIG. 9** to provide another portion of a case or housing for keyboard assembly **50** in its completely folded position **104**.

[**0093**] **FIGS. 10 through 14** show top, side, and end views of keyboard assembly **50**.

[**0094**] **FIGS. 15***a* and **15***b* are enlarged partial sectional views of one of the keys of the keyboard assembly **50**. **FIG. 15***a* shows key **122** in its open or up position. **FIG. 15***b* shows key **122** in its closed or down position. The position of key **122** in **FIG. 15B** can also be referred to as substantially compressed. Key **122** is preferably attached to a base **140**. Referring again to **FIG. 15***a,* key **122** has a keytop **123**. Key **122** is supported by scissor link **130**. Scissor link **130** includes a first arm **132** and a second arm **134**. First and second arms **132** and **134** are pivotally connected at arm pivot point **136**. Preferably, a pair of scissor links **130** is provided for each key **122**.

[**0095**] Below each key **122** is a biasing member **170**. In the preferred embodiment shown in **FIG. 15***a,* biasing member **170** includes a generally frustoconical wall **171**. Biasing member **170** can also be in the form of a generally hemispherical dome or any suitable shape that provides travel and tactile feel for the key. Extending downwardly from a top portion **172** of biasing member **170** is a puck **173**. Puck **173** is a conductive material such as carbon. Directly below puck **173** is at least a pair of conductive leads **174**. Conductive leads **174** are formed in layer **176** and are also of a conductive material such as carbon.

[**0096**] **FIG. 15***b* shows key **122** fully depressed. When key **122** is fully depressed, biasing member **170** also becomes compressed such that wall **171** is collapsed and such that there may be no more travel of the key. In the substantially compressed key position shown in **FIG. 15***b,* puck **173** contacts conductive leads **174**. Key **122** need not be fully or substantially depressed, however. The contact of puck **173** with conductive leads **174** closes an electrical circuit which can then provide a signal to a signal receiver or the information device that key **122** is depressed, i.e. actuated.

[**0097**] The key switch design of the preferred embodiment does not utilize any elements that will be permanently affected by long term compression. The membrane switch material is the part that is typically most susceptible to a permanent deformation. Typical designs utilize a multiple membrane layer approach. Each layer has printed on it one-half of the key switch and when made to contact each other, the switch is closed. The key switch is closed when one of the membrane layers is deflected by compression and thus made to contact another membrane layer. The switch is normally open because the two layers are normally separated in the area of the switch. The top layer, for example, can form a bubble that is resilient. The bubble can be depressed or collapsed momentarily to close the switch, and the resiliency of the membrane layer forming the bubble causes the bubble to separate from the lower layer when the force that collapsed the bubble is removed.

[**0098**] When compressed for long periods, the deflected layer can become permanently deformed and thus fail to

perform properly. Typically, failure results when the two layers remain in contact with each other because the compressed layer loses its resiliency.

[0099] Preferably, a single membrane layer is used to avoid the permanent deformation problem. Deflection of the membrane does not occur. Both halves of the key switch are printed on the single layer membrane. Closing the switch is performed by moving a conductive element or puck **173** on the elastomeric dome **170** into contact with the key switch on the single layer membrane. The puck **173** shorts the halves of the key switch when it. The elastomeric dome, instead of the membrane, is thus compressed for the long duration while the assembly is stored in a folded position. Elastomeric material, designed properly, has been known to easily survive long durations of compression. Silicone rubber is one example of a suitable elastomeric material.

[0100] It is important that the key switch printed on the single layer membrane and the conductive element on the elastomeric dome are compatible and do not cause each other to deteriorate during long periods of contact. Conductive carbon is preferably used.

[0101] The design of the key switch pattern is not specific. For example, two half moons, quadrants, or interlacing fingers can be provided. In all cases, the switch pattern includes two halves of a switch which are shorted by a conductive element. The specific pattern does not necessarily affect the performance.

[0102] **FIG. 16** shows keyboard assembly **50** with a connector assembly **500** extending from one of the frames of the keyboard assembly **50**. Connector assembly **500** provides a docking or mounting location for an information device **60**, such as the one shown in **FIG. 1**. Alternatively, connector assembly can be any of a number of types of connectors that provide an interface between the keyboard and an external device. For example, a cable with a connector on its end can be provided. Another example is an infrared port or a radio frequency antenna. The connector assembly **500** provides a connection location for transmission of signals or information to and from the keyboard assembly.

[0103] **FIG. 16** shows connector assembly **500** includes a connector **510** (which connects mechanically and electrically to the PDA) on a base **540**. The connector **510** provides for electrical connection between the keyboard and the information appliance so that electrical signals, such as key codes which identify keystrokes, can be sent from the keyboard to the information appliance. Base **540** is attached to one of the frames of the assembly **50** at inner pivot **522**. Base **540** carries a telescoping frame **520**. Telescoping frame **520** includes an outer pivot **524** and side members **526** extending between inner pivot **522** and outer pivot **524**. A support leg **530** extends from outer pivot **524**. The frame **520** may be opened when the pivot **524** is grabbed and pulled away from frame **210** in order to slide frame **520** out from frame **210**. As shown in **FIG. 16**, when telescoping frame **520** is extended from the second frame **210**, base **540** and telescoping frame **520** can be pivoted upwardly, support leg **530** can be pivoted rearwardly to provide a triangular support structure for the information device that can then be mounted to connector assembly **500** and rested on frame **520**.

[0104] **FIG. 17** shows keyboard assembly **50** in a partially folded state. First hinge **150** is between first frame **110** and second frame **210**. Center hinge **180** (which includes at least one axle) is between second frame **210** and third frame **310**. Second hinge **160** is between third frame **310** and fourth frame **410**. First hinge **150** and second hinge **160** are both double hinges. First hinge **150** includes first axles **152***a* and **152***b* and second axles **154***a* and **154***b* with hinge member **156** between the first axles **152***a* and **152***b* and the second axles **154***a* and **154***b*. Second hinge **160** is also a double axle hinge having a first axle **162** and second axles **164***a* and **164***b* and a hinge member **166** between the first axle **162** and the second axles **164***a* and **164***b*. Center hinge is a single axle hinge, shown in **FIG. 17** as a piano hinge. Center hinge **180** pivotally connects second frame **210** and third frame **310** such that bottom side **214** of second frame **210** and bottom side **314** of third frame **310** are pivoted to face each other when the keyboard assembly **50** is completely folded. **FIG. 7** also shows various details concerning the hinges and axles described relative to **FIG. 17**.

[0105] First and second hinges **150** and **160** are of the double hinge type so that the adjacent keyboard sections to which they are pivotally attached can be folded with their respective key sets toward each other. The pivoting axes of first and second hinges **150** and **160** are well below the top surfaces of the keys. The width of each hinge member **156** and **166** is selected so that enough space is provided between frames **110** and **210** and frames **310** and **410**, respectively, to accommodate the respective key sets on the top sides of the frames (not shown) when keyboard assembly **50** is folded. The widths of the hinge members can be selected so that the keys of each key set that is folded toward an adjacent keyboard section's key set can be either partially or substantially compressed. Compression of the keys during storage of the keyboard assembly **50** in its completely folded position provides a keyboard assembly with a minimal thickness when folded completely. This compression of the keys (to the point that electrical shorting exists) is maintained with a latch or other mechanism to keep the keyboard closed.

[0106] **FIG. 17** shows connector assembly **500** mounted to the bottom side **214** of second frame **210**. Connector assembly **500**, however, can be located on any of the other keyboard sections.

[0107] **FIG. 18** shows connector assembly **500** partially extended from frame **210**.

[0108] **FIG. 19** shows connector assembly **500** fully extended from second frame **210**. Support leg **530** is shown pivoted about outer pivot **524** outwardly from side members **526**. A pocket **550** is defined on the bottom side **214** of frame **210**. Pocket **550** provides a space for connector assembly **500** when connector assembly **500** is not in use and is folded away and inserted into pocket **550**.

[0109] **FIGS. 20***a* through **20***c* show connector assembly **500** in various positions. **FIG. 20***a* shows connector assembly **500** in an extended position with support leg **530** rotated outwardly., **FIG. 20***b* shows connector assembly **500** in its fully stored position. Telescoping frame **520** is slidable in the direction of the arrow in **FIG. 20***b*. In particular, side members **526** slide through grooves **542** in base **540**. **FIG. 20***c* shows the connector assembly **500** in its fully extended position. From this position, telescoping frame **520** can be pushed in the direction of the arrow shown in **FIG. 20***c*. Side members **526** are slidable through grooves **542** in base **540**.

[0110] **FIG. 21** shows an example of an outer flex circuit **600**. The outer flex circuit **600** provides the contact point **612** for the pluralities of first and fourth keys. Outer flex circuit **601** includes a first panel **610** and a fourth panel **640**. First panel **610** corresponds and is used with first key set **120**, and fourth panel **640** corresponds and is used with fourth key set **420**. First panel **610** is connected to fourth panel **640** by outer flexible bridge **651**. Outer flex circuit **601** including the panel and the bridge is preferably a flexible printed circuit membrane. An outer extension **652** extends generally perpendicularly from outer flexible bridge **651**. Outer extension **652** can provide a connection point for an external device such as an information appliance (e.g. a Palm PDA).

[0111] First panel **610** includes a plurality of first contact points **612**. First contact points **612** each correspond to one of the plurality of first keys **122** of first key set **120**. Fourth panel **640** includes a plurality of fourth contact points **642**. Each of the plurality of fourth contact points **642** corresponds to one of the plurality of fourth keys **422** of fourth key set **420**.

[0112] The outer flexible bridge **651** is folded along fold lines **661**. Also, outer flexible bridge **651** includes loop sections **655** near the ends of outer flexible bridge **651**. Outer flexible bridge **651** is connected to panels **610** and **640** at the ends of loop sections **655**. Fold lines **661** are located at the junction between loop sections **655** at each end of outer flexible bridge **651** and each of the first panel **610** and fourth panel **640**.

[0113] **FIG. 22** shows an example of an inner flexible circuit **603** having a second panel **620** and a third panel **630**. An inner flexible bridge **653** connects second panel **620** and third panel **630**. Second panel **620** includes a plurality of second contact points **622**, which corresponds to and is used with one of the plurality of second keys **622**. Third panel **630** includes a plurality of third contact points **632**, each of which corresponds to and is used with one of the plurality of third keys **322**. Inner flexible circuit **603** also includes an inner extension **654** which provides an area on which a connector can be attached for mounting to a printed circuit board or an external device.

[0114] Inner flexible bridge **653** is joined to panels **620** and **630**. Fold lines **662** are located where inner flexible bridge meets each panel.

[0115] **FIG. 23** shows a portion of outer flexible circuit **601** assembled with first keyboard section **100**. Outer flexible bridge **651** is shown folded at fold line **661**. Also section **655** is shown folded in a double fold that forms a loop which provides enough slack so that first base **140** can be moved laterally with respect to first frame **110**. Not shown in **FIG. 23** is first key set **120** which is positioned above first panel **610** on base **140**.

[0116] **FIG. 24** shows a portion of first panel **640** of outer flexible circuit **601**. First panel **640** is shown positioned on top of base **140**. Outer flexible bridge **651** is shown folded at fold line **661** such that outer flexible bridge **651** is positioned under base **140**. The double arrow of **FIG. 26** shows the direction of lateral movement of base **140** relative to first frame **110** (not shown). Loop section **655** is shown to illustrate that loop section **655** provides slack in outer flexible bridge **651** to accommodate the movement of base **140** in the direction of the arrows.

[0117] **FIG. 25** is an end view of a portion of frame **110** including base **140** and outer flexible circuit **601**. Loop section **655** is shown folded such that outer flexible bridge **651** is positioned under base **140** while first panel **610** of outer flexible circuit **601** is positioned above base **140**.

[0118] **FIG. 26** shows an exploded view of a four section keyboard according to one embodiment of the present invention. Each of the key sets **120**, **220**, **320**, and **420** is each disposed on its respective base **140**, **240**, **340**, and **440** as shown in **FIG. 26**. Each respective base is supported by and resides within its corresponding frame. For example, the base **140** is slidingly held by the first frame **110**. Similarly, the fourth base **440** is slidably held by the fourth frame **410**. Frame **110** includes a ridge **702** and a slot or ridge **710** which respectively receive a ridge **701** and a ridge **707** on the base **140**. Ridge **701** slides within the ridge **702**, and ridge **707** slides within the ridge **710**, thereby securing the base **140** slidably within the frame **110**. Similarly, the ridge **706** slides within the ridge **705** on the frame **410** while the ridge **708** on base **440** slides within the ridge **709** in order to slidably secure base **440** with its fourth key set **420** onto the frame **410**. Key sets **220** and **320** are fixedly secured onto frames **210** and **310**. As shown in **FIG. 26**, frames **210** and **310** are joined by the hinge **180**. Frames **110** and **210** are joined by double hinge **150**, and frames **310** and **410** are joined by the double hinge **160**. Backplates **703** and **704** cover the back side of frames **110** and **410** in order to cover the mechanical and electrical components associated with bases **140** and **440**.

[0119] **FIGS. 28***a*, **28***b*, **29***a*, **29***b*, **30***a*, **30***b*, **31***a*, **31***b*, and **31***c* will now be referred to while describing one embodiment of a four section keyboard which is collapsible and which uses flexible printed circuit membranes and tapes to interconnect the various sections of the keyboard. **FIGS. 28***a* and **28***b* show two views of the flexible printed circuit membrane and tape used for the left outer section of the keyboard. The main printed circuit section **715** is disposed under the first set of keys on the left outer section of the keyboard. Typically, this printed circuit section **715** is disposed between the base **140** and the first set of keys **120**. This printed circuit may be a conventional keyboard matrix array which includes conductors which may be shorted (e.g. layer **176** shown in **FIG. 15***a*) and which has been separated into an appropriate section for those keys disposed in the first key set **120**. A flexible printed circuit (e.g. a tape with conductive traces located on the tape which is flexible) extends from the printed circuit section **715** to form tape regions **715***a* and **715***b* and these tapes **715***a* and **715***b* serve to conduct electrical signals (e.g. key codes) to and from the information appliance.

[0120] **FIGS. 29***a* and **29***b* show two views of a flexible printed circuit for the right outer keyboard section which includes the fourth key sets **420** which are disposed on a corresponding base **440**. The main printed circuit section **716** is typically disposed between the fourth key set **420** and the fourth base **440** and is also a conventional keyboard matrix circuit which has been sectioned into the appropriate electrical matrix section for the fourth set of keys. The printed circuit **716** is coupled to a flexible printed circuit tape **716***a* which extends away from the printed circuit section **716**.

[0121] **FIGS. 30***a* and **30***b* show two views of the printed circuit sections **717** for the two interior sections of the four

section keyboard. Printed circuit layer **717***a* is typically disposed between the second key set **220** and the second base **240**, and the printed circuit layer **717***b* is disposed between the third key set **320** and the third base **340**. Printed circuit layers **717***a* and **717***b* are also sections of the conventional keyboard matrix appropriately sectioned for the corresponding keys in the key sets of the section. Each of these printed circuit layers includes a flexible printed circuit tape **717***c* which is designed to convey the signals from the keyboard matrix to a keyboard controller.

[**0122**] **FIG. 31***a* shows a top, open view of the four frames **110**, **210**, **310**, and **410** which include portions of the tapes from the printed circuit layers shown in **FIGS. 28***a*, **29***a*, and **30***a*. **FIG. 31***a* also includes various axle and hinge details which correspond to the details shown in **FIGS. 7 and 17** as well as other figures herein. Dressing for the printed circuit tapes **715***a* and **716***a* is provided in order to allow these printed circuit tapes to be used reliably in the two outer sections which move relative to the two interior sections. Details concerning this dressing is further shown in **FIGS. 31***b*, **31***c*, and **31***d*. **FIG. 31***b* is a side or cross-sectional view taken along line **725** and shows the arrangement of the top shield or guard relative to the bottom shield or guard and relative to the other components between the left outer section which includes the frame **110** and the interior section which includes the frame **210**. **FIG. 31***c* is a top view of the top shield **720**L without showing in this view the bottom shield or certain details of the hinge **150**.

[**0123**] As shown in **FIG. 31***b*, the top shield **720**L covers the printed circuit tape **715***b* over the region of the double hinge which includes the hinge member **156** and the axles **152***a* and **152***b* as well as axles **154***a* and **154***b*. The printed circuit tape **715***b* is above the bottom shield or guard **719**L, and this shield or guard **719**L is above the double hinge area **150** as well as the frames **110** and **210** as shown in **FIG. 31***b*. The bottom shield **719**L is fixed (e.g. by glue) to the inner face of the frame **210** as shown in **FIG. 31***b*, and this shield is also fixed to the printed circuit tape **715***b* at the points **719***f*. This fixedly secures the printed circuit tape **715***b* at this portion of the frame **210** to the bottom guard **719**L. The fixation of the tape **715***b* to the bottom guard **719**L and to the frame **210** is also shown in the top view of **FIG. 31***d*, where the points of fixation are shown by the points **719***f* and **719***e*. The top shield **719**L is not fixed to the tape **715***b* and thus allows the tape **715***b* to move relative to the top shield **720**L. The top shield **720**L is, however, secured to the frame **110** by the fixation point **720***f* as shown in **FIGS. 31***b* and **31***c* in which the fixation points **720***e* and **720***f* represent the points of fixation of the top shield **720**L to the frame **110**. This fixation may be through the use of glue or other mechanisms to adhere the top shield **720**L to the frame **110**. The tape **715***b* includes two loops (also shown in **FIG. 24**) which allow for movement of the printed circuit tape. As shown in **FIG. 31***b*, the printed circuit tape winds through an opening in the base **140** and connects to the printed circuit layer **715** as shown in **FIG. 31***b* and **28***a*. It will be appreciated that the outer right section of the four section keyboard includes a similar manner of dressing the tape **716***a* with the use of the top shield **720***r* and the bottom shield **719***r*. It will also be appreciated that tape **715***b* and bottom guard **719**L may be secured to frame **210** by securing these items to base **240** which is secured to the frame **210**.

[**0124**] **FIG. 32** shows an alternative embodiment for a connector assembly according to one embodiment of the present invention. In this example, an electrical docking port **732** is rotatably positioned in a housing **735** which is secured in one embodiment on the left interior keyboard section at the top of the frame **210**. Posts **734***a* and **734***b* are slidably disposed within channels of the housing **735** and may be extended out away from the frame **210**. These posts **734***a* and **734***b* are coupled to a support **733** which may be rotated upwardly away from the posts. The support **733** is used to hold a PDA which may be electrically docked with a connector **732**. A curved surface **734***c* may be used on the support **733** to lock the posts into a position to keep the support **733** in a substantially vertical position.

[**0125**] Another embodiment of a keyboard assembly includes a method of automatically turning on an information appliance when the information appliance (e.g. a Palm Pilot or other personal digital assistant (PDA) which uses the Palm OS) is mounted to the keyboard. In order for the keyboard to be used with an information appliance in this embodiment, a software driver must be active (on the information appliance) for the information appliance to recognize the keyboard inputs. For several reasons, however, this software driver is not always active for many information appliances (e.g. PDAs which use the Palm OS). For instance, the software driver can go to an inactive or "sleep" mode to reduce power consumption. Therefore, the software driver must be activated before any keyboard input is initiated. Once the driver is inactivated, signals from the keyboard are not properly received by the PDA. In one situation, the software driver must be activated when the information appliance is first connected to the keyboard. In another situation, the software driver must be activated after the information appliance automatically turns off while connected to the keyboard and must be awakened. The software driver is automatically disabled when the information appliance is turned off. Normally when this driver is disabled and the information appliance is also off, it is not possible to reactivate (e.g. turn on) the information appliance by pressing a key on the keyboard. An embodiment of the invention allows the pressing of a key in this case to reactivate the information appliance.

[**0126**] Upon connection to the keyboard, the information appliance is turned on, if in an off state, and the software driver is activated. In one embodiment, a sequence of events is as follows:

[**0127**] 1. Connecting the information appliance applies power to the keyboard electronics. This power is available from the information appliance whether the information appliance is on or off;

[**0128**] 2. Upon receiving power for the first time, keyboard electronics sends a "hot sync" signal to the information appliance (in this case a PDA using the Palm OS). The hot sync signal, as used with a Palm OS device, is a control signal which is used to cause the PDA to perform some operation (e.g. transfer data from one device to another device). Normally, this hot sync signal is not used by a peripheral's software driver and is not interrupted by the driver.

[**0129**] 3. Upon receiving the hot sync signal, the information appliance turns on, if in an off state, and receives the signal.

[0130] 4. The keyboard's software driver intercepts this signal, then pauses any activity on the information appliance.

[0131] 5. The keyboard electronics send an ID code immediately after sending the hot sync signal.

[0132] 6. The software driver having been activated and in listen mode, detects the keyboard ID code and determines that a keyboard is attached.

[0133] 7. The handshake activity is completed and the keyboard's now active driver processes the keyboard inputs.

[0134] When the information appliance has gone into sleep mode while plugged into the keyboard (after a period of inactivity), the information appliance may be turned on and the keyboard's software driver activated by pressing any key on the keyboard. In one embodiment, a sequence of events that causes this to happen, is as follows:

[0135] 1. The keyboard electronics goes into sleep mode after the information appliance goes into sleep mode. The keyboard electronics is able to monitor any key activity in this mode.

[0136] 2. User presses any key on the keyboard (while the PDA is in a sleep mode). **3**. Keyboard electronics detects the key press, stores a key code into a buffer, and sends a "hot sync" signal to information appliance.

[0137] 4. Upon receiving the hot sync signal, the information appliance turns on and receives the signal.

[0138] 5. The keyboard's software driver intercepts this signal, then pauses any activity on the information appliance.

[0139] 6. The keyboard electronics sends an ID code immediately after sending the hot sync signal.

[0140] 7. The keyboard's software driver having been activated and in listen mode, detects the keyboard ID code and determines a keyboard is attached.

[0141] 8. The handshake activity is completed and the keyboard's now active driver processes the key pressed by the user as well as subsequent key presses.

[0142] The above keyboard electronic activity is preferably controlled by a single keyboard controller chip. **FIG. 33** shows an example of the method described here. **FIG. 33** shows one method in which a keyboard which is connected to a PDA may by used to reactivate the PDA after is has gone to sleep and while the keyboard is still attached to the PDA. Operation **801** involves the disabling of the keyboard software driver for the PDA while the keyboard is docked to the PDA. Also, the operating system of the PDA causes the PDA to enter a sleep mode in which less power is consumed. In operation **803**, a user presses a key on the keyboard while the PDA is still on the sleep mode. In response to this key press, in operation **805**, the keyboard controller in the keyboard receives the key press signal and stores the key code of the key press and sends a hot sync signal to the PDA. Note that the keyboard controller, even in the low power state, is sampling keystrokes, and this may be done by drawing power from the PDA. Alternatively, a small battery in the keyboard may provide power for this activity. In operation **807**, the PDA, in response to the hot sync signal, exits the low power mode and receives the signal. In operation **809**, the keyboard's software driver intercepts this hot sync signal and pauses activity on the PDA. Then the keyboard's software driver listens for the keyboard's identifier code which is transmitted from the keyboard after the keyboard sends the hot sync signal. In operation **811**, the software driver determines whether a keyboard is attached by determining whether the keyboard identifier code has been sent after the hot sync signal. If no keyboard identifier code has been sent, then processing proceeds to operation **812** in which the hot sync signal is passed to the PDA's operating system in order to process the hot sync signal. This may, for example, represent the attachment of a different device to the PDA rather than the keyboard. If, on the other hand, a keyboard identifier code has been sent from the keyboard to the PDA, then in operation **814**, the handshaking activity is completed and the keyboard software driver processes the stored keystroke and subsequent keystrokes and the hot sync signal is not processed further by the PDA.

[0143] In order to operate similarly for other types of information appliances, additional circuitry (hot sync initiate circuitry, HSIC) may be required. This is due to the fact that other information appliances do not provide enough power in an off state to power on the keyboard controller chip. The HSIC is only used for the first situation where the information appliance is initially plugged into the keyboard. The HSIC requires lower power to provide a hot sync signal. Once the information appliance is turned on with the HSIC hot sync signal, enough power is provided to the keyboard controller chip. Then the keyboard controller chip takes over and operates as described above.

[0144] A specific embodiment concerning the use of a foldable keyboard with the Palm OS will now be described. When power is applied for the first time to the keyboard, an encoder circuit will wait for 500 milliseconds and then produce a hot sync pulse (maximum duration: 200 milliseconds), irrelevant of the state of the RTS line. As soon as any state change lasting over 2 milliseconds is detected on the RTS line, the hot sync pulse will be terminated.

[0145] The encoder circuit (e.g. a keyboard controller) will then wait for the RTS line to become active (high). If RTS transitions to the active (high) state while the hot sync pulse is also active (high), or within 1.5 seconds after the hot sync pulse, the encoder circuit will send a two-byte identification packet, 3 to 5 milliseconds after the RTS line transitions to the active (high) state and remains active (high).

[0146] When the software driver for the keyboard detects a hot sync pulse while the serial port is active, it should deactivate (dose) the port, wait for 2 milliseconds, and immediately activate (reopen) the serial port. This situation can only be encountered on insertion of the unit onto the keyboard connector (or totally erroneous operations of both the driver and the encoder circuit, in which case both will recover after a keypress or, possibly, removal and reinsertion of the Palm). If the serial port was deactivated (closed) when the hot sync pulse arrived, it is not required to deactivate (close) the serial port (providing considerable savings in response time).

[0147] Following successful handshaking, the encoder circuit will start normal operations, transmitting down and up codes for the keypresses. If there are no more keys pressed, the last up code will be doubled.

[0148] If RTS line has not activated within 1.5 seconds, the encoder circuit will repeat the hot sync pulse. Up to three (3) pulses will be produced. If the host has not responded with activation of the RTS line (total wait time of 5.1 S=200 mS×3+1.5 S×3), the encoder circuit will operate in an extra-low power state until the RTS line becomes active. During this extra-low power state the keypresses will not initiate hot sync pulses, and continuous keypress will not create any additional power drain.

[0149] When the RTS line becomes active, the encoder circuit will exit an extra-low power mode, and send a two-byte identification packet, 3 to 5 milliseconds after the RTS transition.

[0150] The purpose of the hot sync pulse on power-up is to wake up the host and to activate the driver or shutdown totally if the driver is not present, even if a key is pressed, in order to conserve power.

[0151] If the encoder circuit is operating in normal mode (it has been able to establish communications since the power-up), and RTS inactive state is encountered when the encoder circuit needs to transmit keypress to the host, the hot sync procedure will be repeated. Hot sync line will be activated up to three (3) times until the RTS line becomes active or the encoder circuit will shift to an extra-low power mode.

[0152] Timing and transmission of the two-byte identification packet in this case is exactly the same as in the "first power-up" case.

[0153] The purpose of the hot sync pulse on keypress is to wake up the host and the driver, or shutdown totally if the driver is not present, even if a key is pressed, in order to conserve power. Driver may deactivate the serial port at any time in order to conserve the power. Wake up from the keypress is instantaneous, transparent to the user.

[0154] If no keys have been pressed for a period of 300 milliseconds, then the encoder circuit will enter a low-power state. The RTS line can be negated (set to a low level) any time after this 300-millisecond interval without generating any additional activity from the encoder circuit.

[0155] However, if RTS line is deactivated prior to the end of the 300-millisecond interval, the hot sync line will be activated up to three (3) times until the RTS line becomes active, or the encoder circuit will shift to an extra-low power mode. If RTS line returns to the active (high) state, the encoder will send a two-byte identification packet and re-send all of the bytes transmitted to the host during the interval prior to the deactivation of the RTS (not exceeding 300 milliseconds).

[0156] If transmissions to the host continued for more than 300 milliseconds (with no idle periods of 300 milliseconds or more), while the RTS line was continuously active (high), then no re-send operations will be initiated even if RTS line goes inactive in the middle of transmission. In this case the hot sync handshaking will be initiated, and transmission will commence from the point where it was interrupted.

[0157] This situation can only occur due to manual intervention of the user (to remove the driver), slow response from the Palm OS, or erroneous operation of the driver. Recovery is immediate, but some keystrokes may be lost. It is preferable to lose some characters rather than automatically re-introduce (possibly) a long string of characters.

[0158] In the preceding detailed description, the invention is described with reference to specific embodiments thereof. It will, however, be evident that various modifications and changes may be made thereto without departing from the broader spirit and scope of the invention as set forth in the claims. The specification and its drawings are, accordingly, to be regarded in an illustrative rather than a restrictive sense.

What is claimed is:

**1**. A keyboard assembly comprising:

a plurality of keyboard sections, said keyboard sections foldable with respect to each other between a folded position and an unfolded position, said keyboard sections being generally coplanar when in said unfolded position and stacked when in said folded position, wherein said plurality of keyboard sections comprises a first keyboard section, a second keyboard section, a third keyboard section, and a fourth keyboard section;

at least one hinge connecting said second and said third keyboard sections;

a first double hinge connecting said first and said second keyboard sections, said first double hinge including a first hinge member; and

a second double hinge connecting said third and said fourth keyboard sections, said second double hinge including a second hinge member.

**2**. The keyboard assembly of claim 1 wherein said keyboard sections each include a keyboard frame, said keyboard frames, said first hinge member, and second hinge member cooperating to form a self-contained housing when said keyboard sections are in said folded position.

**3**. The keyboard assembly of claim 1 wherein said first hinge member and said second hinge member are shaped to fit together to form one side of a self-contained housing.

**4**. The keyboard assembly of claim 2 wherein said first double hinge includes an outer pin connecting said first keyboard section to said first hinge member and an inner pin connecting said second keyboard section to said first hinge member;

said second double hinge includes a inner pin connecting said third keyboard section to said second hinge member and an outer pin connecting said fourth keyboard section to said second hinge member;

said at least one hinge includes a central pin connecting said second keyboard section and said third keyboard section;

wherein when said keyboard sections are in said folded position, said inner pins of said first and said second double hinges and said central pin of said at least one hinge are all coplanar.

**5**. The keyboard assembly of claim 1 wherein said first keyboard section and said second keyboard section each include a set of keys slidable over said respective first and second double hinges.

**6**. A keyboard assembly comprising:

four keyboard sections, each keyboard section hingedly connected to an adjacent section, said keyboard sec-

tions foldable with respect to each other between a folded position and an unfolded position, said four keyboard sections being generally coplanar when in said unfolded position and stacked when in said folded position, each of said four keyboard sections including a frame, each frame having a side wall shaped to nest with an adjacent side wall when said keyboard sections are in said folded position.

**7**. The keyboard assembly of claim 6 wherein said side walls and at least two of said frames form a self-enclosed housing for said keyboard assembly in said folded position.

**8**. The keyboard assembly of claim 7 wherein said four keyboard sections include a first frame, a second frame, a third frame, and a fourth frame;

a single hinge connecting said second and said third frames;

a first double hinge connecting said first and said second frames, said first double hinge including a first hinge member; and

a second double hinge connecting said third and said fourth frames, said second double hinge including a second hinge member;

said first hinge member and said second hinge member are shaped to cooperate with each other to form one side of said self-contained housing.

**9**. The keyboard assembly of claim 8 wherein said first hinge member and said second hinge member releasably lock together when said keyboard sections are in said folded position.

**10**. A keyboard assembly comprising:

a first section having a first frame and a first plurality of keys, said first plurality of keys coupled to a first base, said first base is slidable relative to said first frame;

a second section coupled to said first section, said second section having a second frame and a second plurality of keys coupled to said second frame, said first plurality of keys and said first base are laterally movable relative to said second plurality of keys;

a flexible circuit including a first panel disposed between said first plurality of keys and said first base, said flexible circuit further including a bridge portion extending from said first panel and between said second frame and said second plurality of keys.

**11**. The keyboard assembly of claim 10 further comprising a flexible guard piece mounted over said bridge portion, said flexible guard piece having a first portion attached to said first frame and a second portion extending from said first portion and between said bridge portion and said second plurality of keys, wherein said bridge portion is slidable under said flexible guard piece when said first section and said second section are folded toward each other.

**12**. A keyboard assembly comprising:

four keyboard sections, said keyboard sections foldable with respect to each other between a folded position and an unfolded position, said four keyboard sections being generally coplanar when in said unfolded position and stacked when in said folded position;

a connector associated with one of said keyboard sections, said connector adapted for electrical connection to an information appliance; and

a slidable support coupled to at least one of said keyboard sections, said slidable support providing a docking connection for said information appliance.

**13**. The assembly of claim 12 wherein said connector is on a telescoping frame wherein said telescoping frame is movable from a hidden position to an extended position.

**14**. The assembly of claim 13 wherein said telescoping frame includes a support leg attached to said telescoping frame, wherein said support leg holds said connector in a selected position when said frame is moved to said extended position.

**15**. The assembly of claim 12 further comprising a telescoping frame movable from a hidden position to an extended position, and a support member operatively associated with said telescoping frame, said support member being biased by said telescoping frame to a deployed position when said telescoping frame is in said extended position.

**16**. A keyboard assembly as in claim 10 wherein said keyboard is collapsible.

**17**. A keyboard assembly as in claim 10 further comprising:

a first flexible guard piece disposed over said first frame and said second frame and being fixedly coupled to one of said first frame and said second frame.

**18**. A keyboard assembly as in claim 17 further comprising:

a second flexible guard piece disposed over said first frame and said second frame and being fixedly coupled to one of said first frame and said second frame, and wherein said bridge portion comprises at least one loop.

**19**. A keyboard assembly as in claim 18 wherein one of said first flexible guard piece or said second flexible guard piece is fixedly coupled to said bridge portion.

**20**. A keyboard assembly as in claim 19 wherein said keyboard assembly is foldable and said first section is rotatably coupled to said second section and said bridge portion moves relative to at least one of said first frame and said second frame as said first section is rotated relative to said second section.

**21**. A keyboard assembly as in claim 20 wherein at least one hinge couples said first section to said second section and wherein said bridge portion and said first flexible guard piece and said second flexible guard piece extend over said at least one hinge.

**22**. A keyboard assembly as in claim 21 wherein said at least one hinge comprises a double hinge.

**23**. A keyboard assembly as in claim 17 wherein said keyboard assembly is foldable and said first section is rotatably coupled to said second section and said bridge portion moves relative to at least one of said first frame and said second frame as said first section is rotated relative to said second section.

**24**. A keyboard assembly as in claim 11 further comprising a bottom flexible guard piece mounted under said bridge portion above said first frame and said second frame and being fixedly attached to said bridge portion and to said second frame.

**25**. A keyboard assembly comprising:

a first section having a first set of keys;

a second section having a second set of keys;

a double hinge rotatably coupled to said first section and to said second section, wherein said first set of keys is movable over said double hinge relative to said second set of keys.

**26**. A keyboard assembly as in claim 25 wherein said keyboard assembly is a foldable keyboard which comprises at least three sections.

**27**. A keyboard assembly as in claim 25 wherein said double hinge comprises a first axle coupled to said first section and a second axle coupled to said second section and a hinge member coupled to said first axle and said second axle.

**28**. A keyboard assembly as in claim 27 wherein said first set of keys comprises at least two rows of keys, each of said rows having at least two keys.

**29**. A keyboard assembly as in claim 28 wherein said hinge member is an enclosure wall when said keyboard assembly is collapsed to a folded configuration.

**30**. A keyboard assembly comprising:

a first keyboard section including a first frame and a plurality of first keys on said first frame, each of said plurality of first keys having a first keytop and a biasing member below said first keytop, and a first pair of electrical contacts;

a second keyboard section including a second frame and a plurality of second keys on said second frame, each of said plurality of second keys having a second keytop and a biasing member below said second keytop and a second pair of electrical contacts; and

wherein said first keyboard section is attached in a plane to said second keyboard section in an operating position and is detachable to a storage position in which said first and second keytops contact each other such that said biasing members are compressed and said first pair of electrical contacts are shorted and said second pair of electrical contacts are shorted.

**31**. A keyboard assembly as in claim 30 wherein a latch secures said first keyboard section and said second keyboard section together to maintain said first and said second keytops in contact such that said first pair of electrical contacts and said second pair of electrical contacts are maintained in a shorted state.

**32**. A keyboard assembly comprising:

a first keyboard section;

a second keyboard section foldable over said first keyboard section in a folding direction, wherein said keyboard assembly is foldable between a folded position and an unfolded position; and

a mechanism that keeps said keyboard assembly generally flat when in an unfolded position, said mechanism providing resistance against folding of said first and second keyboard sections in a direction opposite said folding direction while allowing folding in said opposite direction when sufficient force is applied to overcome said resistance.

**33**. The keyboard assembly of claim 32 wherein said mechanism includes a hinge, and said hinge couples said first keyboard section to said second keyboard section.

**34**. The keyboard assembly of claim 33 wherein said hinge includes a hinge member extending between said first keyboard section and said second keyboard section, said first keyboard section includes a first frame, said first frame includes a hinge element which contains an axle and a ridge, and said ridge engages said hinge member to provide said resistance against folding in said opposite direction.

**35**. The keyboard assembly of claim 34 wherein said ridge moves past said hinge member when sufficient force is applied to overcome said resistance.

**36**. The keyboard assembly of claim 35 wherein said keyboard assembly can be restored to said generally flat unfolded position by moving said ridge back to its position engaged with said hinge member.

**37**. A method for activating a personal digital assistant (PDA) from a low power state, in which a software driver for a peripheral device is disabled in the low power state, said peripheral device being coupled to said PDA and said peripheral device being used to activate said PDA, said method comprising:

transmitting a control signal from said peripheral to said PDA;

storing a peripheral data for later transmission to said PDA;

transmitting a peripheral identifier to said PDA;

transmitting said peripheral data to said PDA.

**38**. A method as in claim 37 wherein said method is performed entirely by said peripheral.

**39**. A method as in claim 38 wherein said peripheral is a collapsible keyboard and said peripheral data is a key code identifying a key which was pressed and wherein pressing said key causes said control signal to be transmitted and wherein said peripheral data is transmitted after first transmitting said control signal and then transmitting said peripheral data.

**40**. A method as in claim 39 wherein said control signal is a hot sync signal used in PDAs which run the Palm operating system.

**41**. A method as in claim 37 further comprising:

receiving said control signal on said PDA and entering a high power state on said PDA;

intercepting, by said software driver, said control signal;

determining whether said peripheral identifier has been received by said PDA;

receiving said peripheral data after determining said peripheral identifier has been received.

**42**. A method as in claim 41 wherein said intercepting prevents an operating system on said PDA from acting on said control signal.

**43**. A method as in claim 42 wherein if said peripheral data is not received within a predetermined period of time then said control signal is passed to said operating system for processing by said operating system.

* * * * *