US 20050266915A1

(19) United States

(12) Patent Application Publication (10) Pub. No.: US 2005/0266915 A1

Isogai et al. (43) Pub. Date: Dec. 1, 2005

(54) GAMING MACHINE

(76) Inventors: **Ryo Isogai**, Tokyo (JP); **Daisuke Hatakeyama**, Tokyo (JP); **Takehisa Itagaki**, Tokyo (JP); **Hirokazu Kitani**, Tokyo (JP)

Correspondence Address:
ARENT FOX PLLC
1050 CONNECTICUT AVENUE, N.W.
SUITE 400
WASHINGTON, DC 20036 (US)

(21) Appl. No.: **11/137,772**

(22) Filed: **May 26, 2005**

(30) **Foreign Application Priority Data**

May 27, 2004 (JP) P2004-157923

Publication Classification

(51) **Int. Cl.**[7] **A63F 9/24**

(52) **U.S. Cl.** **463/20**

(57) **ABSTRACT**

A gaming machine includes: a display that displays a game screen having a plurality of display areas provided with a plurality of symbol display areas; a lottery unit that performs a lottery to determine symbols to be displayed in each of the symbol display areas from among a plurality of symbols; and a controller that controls the display to display the symbols to be stopped in each of the symbol display areas after variably displaying the plurality of symbols in each of the symbol display areas, wherein when a predetermined combination of the symbols is determined by the lottery unit to be displayed in at least one of the display areas, the controller controls the display to replace the predetermined combination of the symbols into a different symbol different from the symbols in the predetermined combination after displaying the symbols determined by the lottery unit to be stopped in each of the symbol display areas.

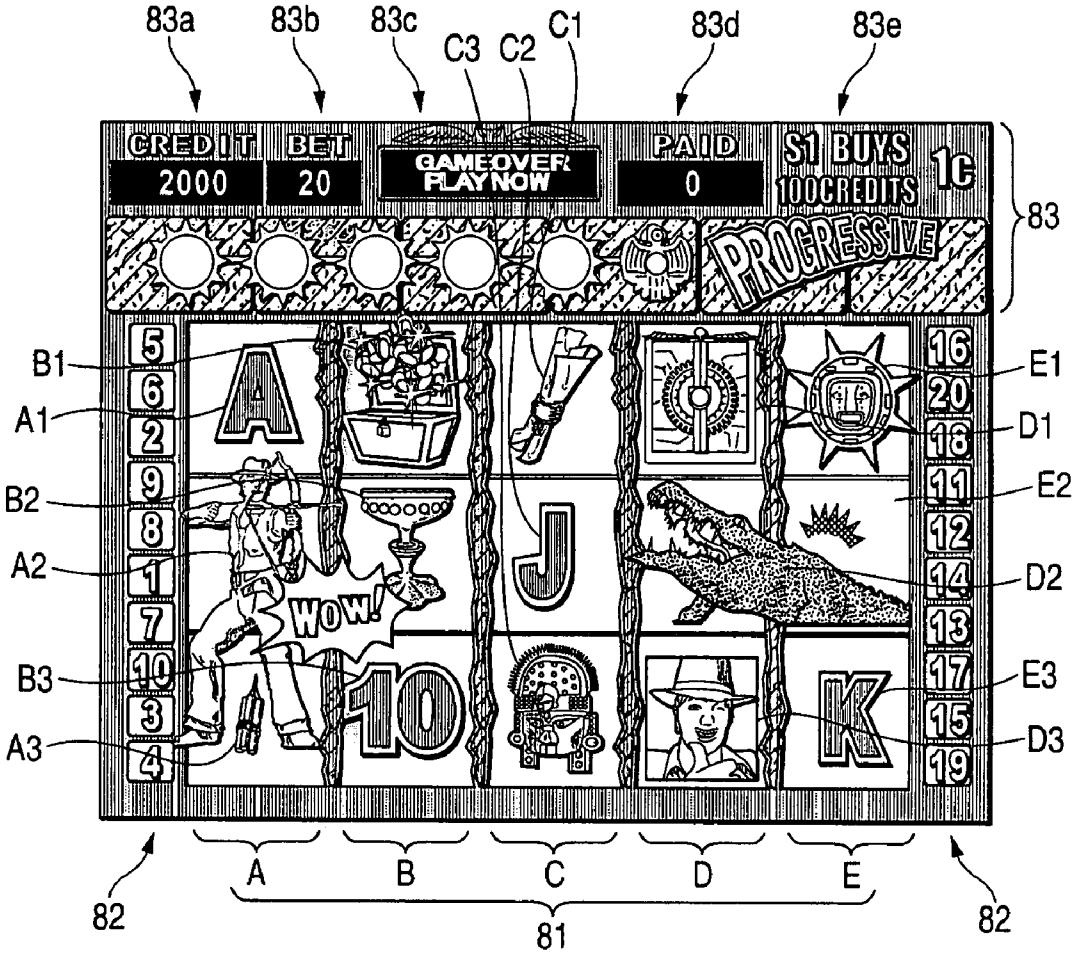

FIG. 1

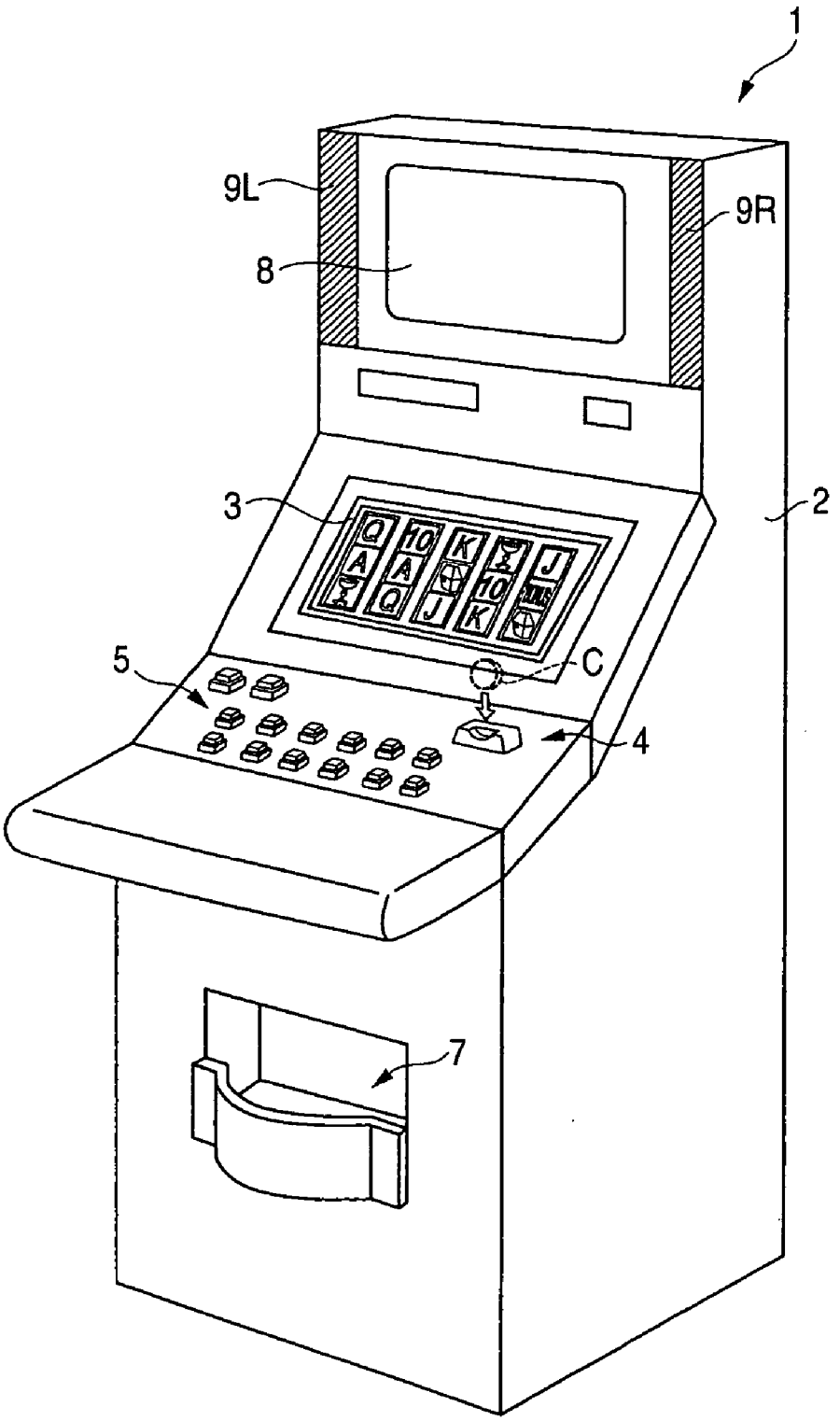

FIG. 2

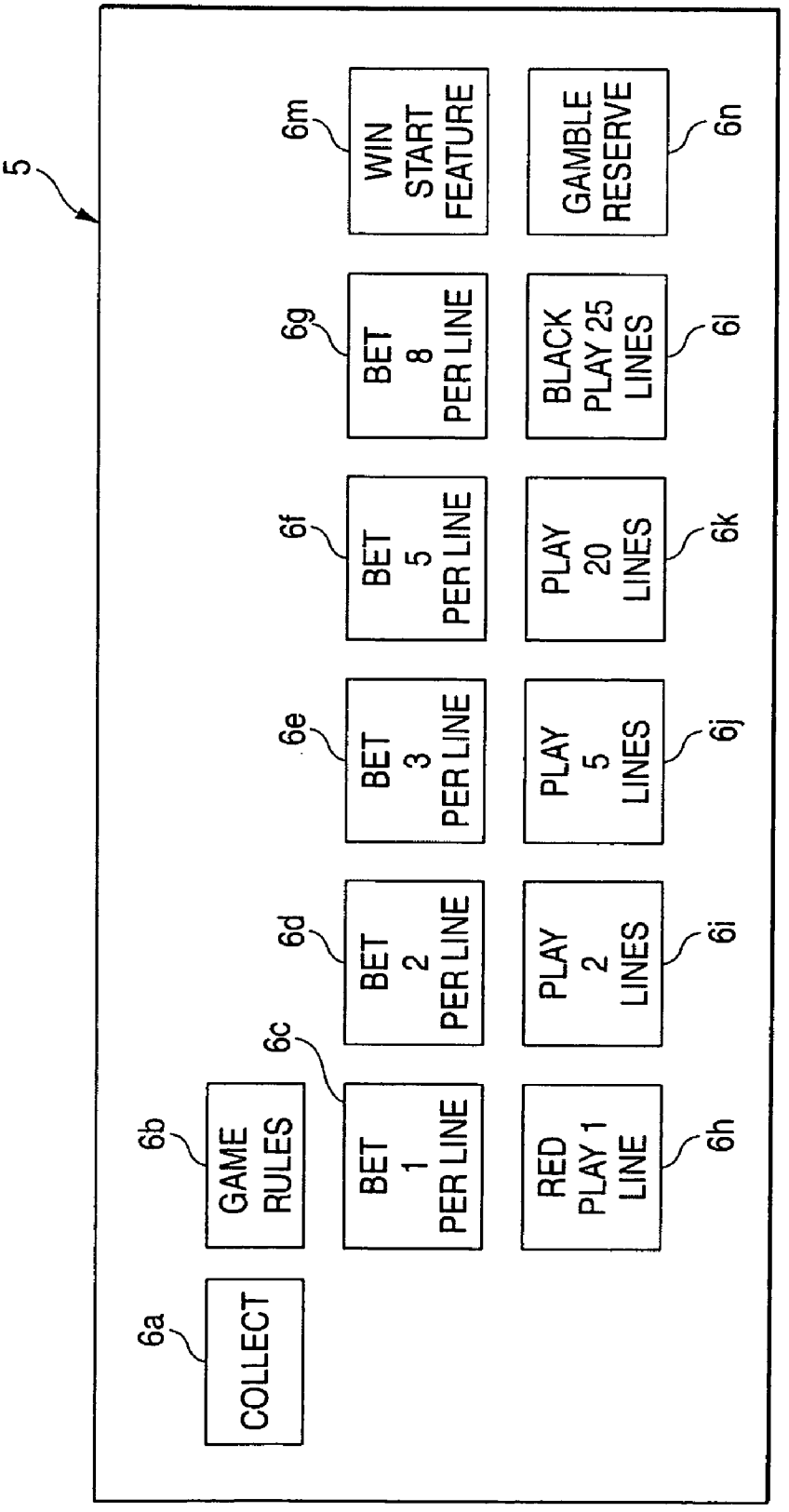
5
6a
COLLECT
6b
GAME RULES
6c
BET 1 PER LINE
6d
BET 2 PER LINE
6e
BET 3 PER LINE
6f
BET 5 PER LINE
6g
BET 8 PER LINE
6h
RED PLAY 1 LINE
6i
PLAY 2 LINES
6j
PLAY 5 LINES
6k
PLAY 20 LINES
6l
BLACK PLAY 25 LINES
6m
WIN START FEATURE
6n
GAMBLE RESERVE

FIG. 3

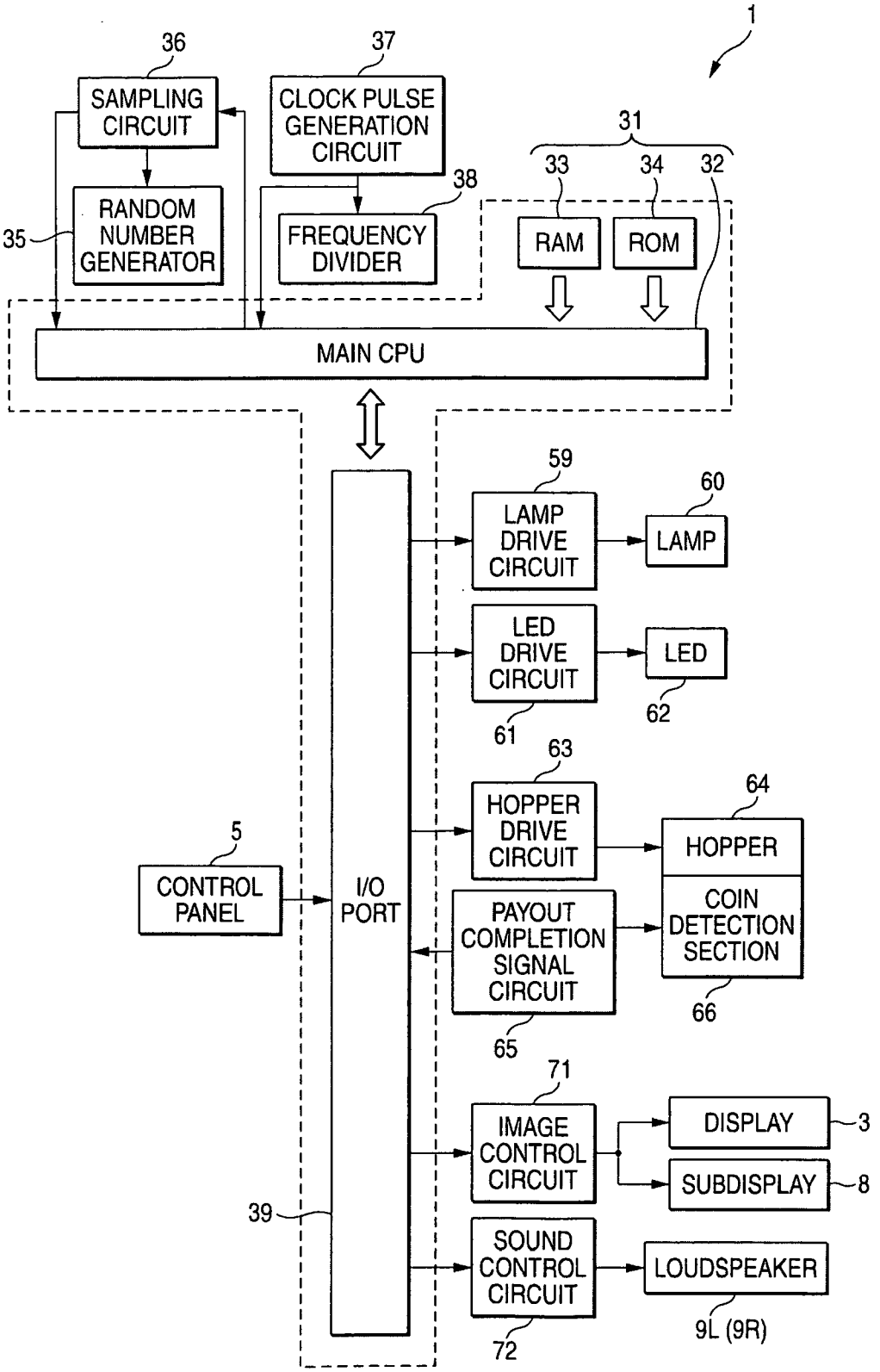
1
36
37
SAMPLING CIRCUIT
CLOCK PULSE GENERATION CIRCUIT
31
33
34
32
38
35
RANDOM NUMBER GENERATOR
FREQUENCY DIVIDER
RAM
ROM
MAIN CPU
59
60
LAMP DRIVE CIRCUIT
LAMP
LED DRIVE CIRCUIT
LED
61
62
63
64
HOPPER DRIVE CIRCUIT
HOPPER
5
CONTROL PANEL
I/O PORT
PAYOUT COMPLETION SIGNAL CIRCUIT
COIN DETECTION SECTION
65
66
71
IMAGE CONTROL CIRCUIT
DISPLAY
3
SUBDISPLAY
8
39
SOUND CONTROL CIRCUIT
LOUDSPEAKER
72
9L (9R)

FIG. 4

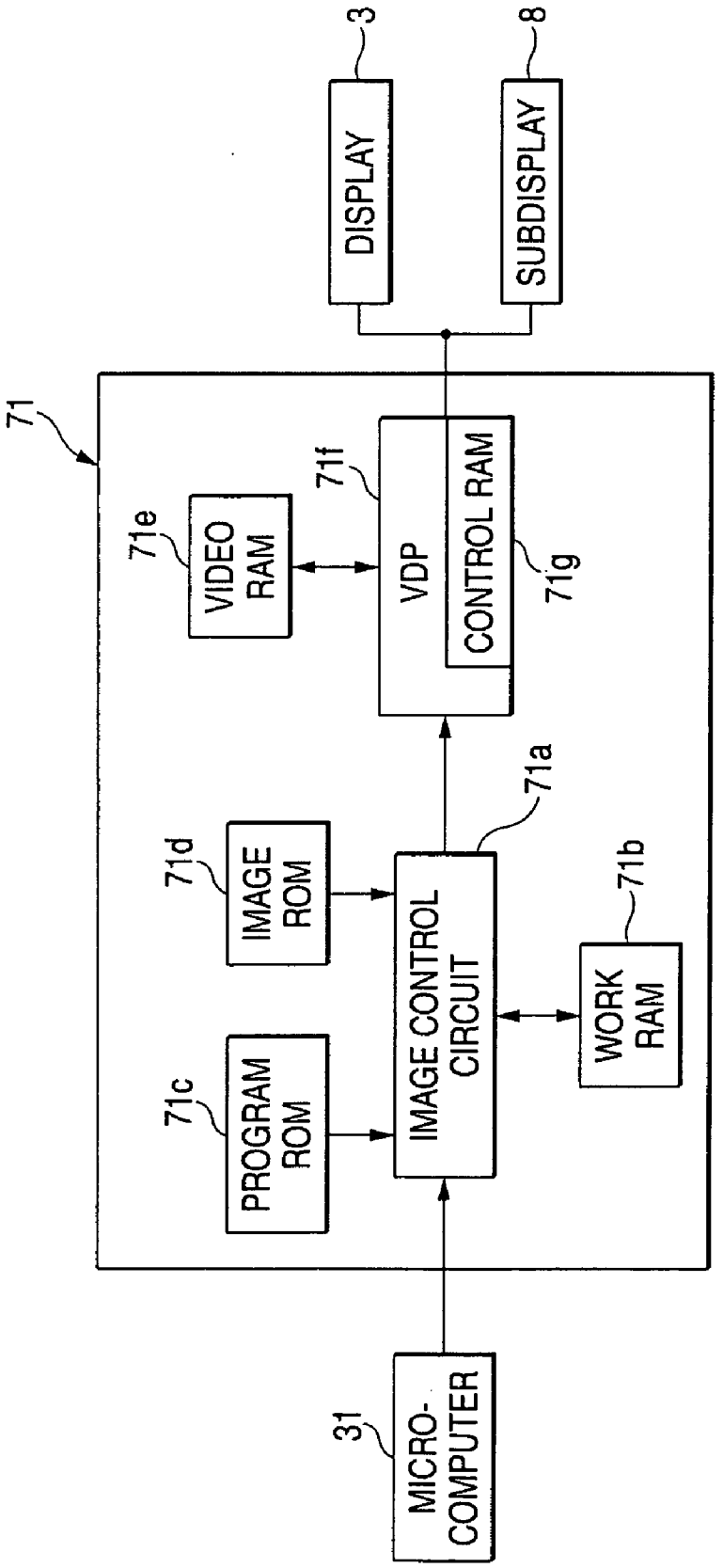
3
DISPLAY
8
SUBDISPLAY
71
71e
VIDEO RAM
71f
VDP
CONTROL RAM
71g
71d
IMAGE ROM
71a
IMAGE CONTROL CIRCUIT
71b
WORK RAM
71c
PROGRAM ROM
31
MICRO-COMPUTER

FIG. 5

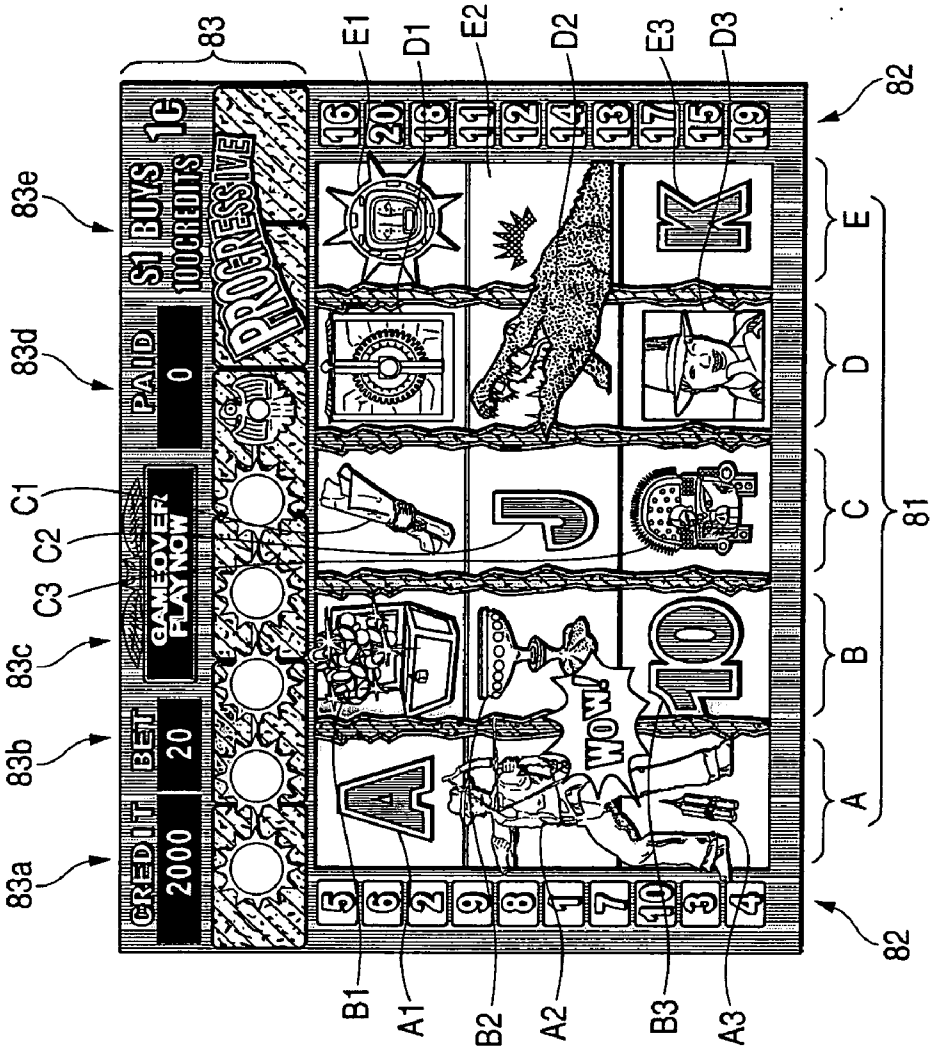
83
E1
D1
E2
D2
E3
D3
82
83e
83d
C1
C2
C3
83c
83b
83a
CREDIT
2000
BET
20
GAMEOVER
PLAY NOW
PAID
0
$1 BUYS
100 CREDITS
1c
PROGRESSIVE
16
20
13
11
12
14
13
17
15
19
E
D
C
B
A
81
WOW
10
5
6
2
9
8
1
7
10
3
4
82
B1
A1
B2
A2
B3
A3

FIG. 6

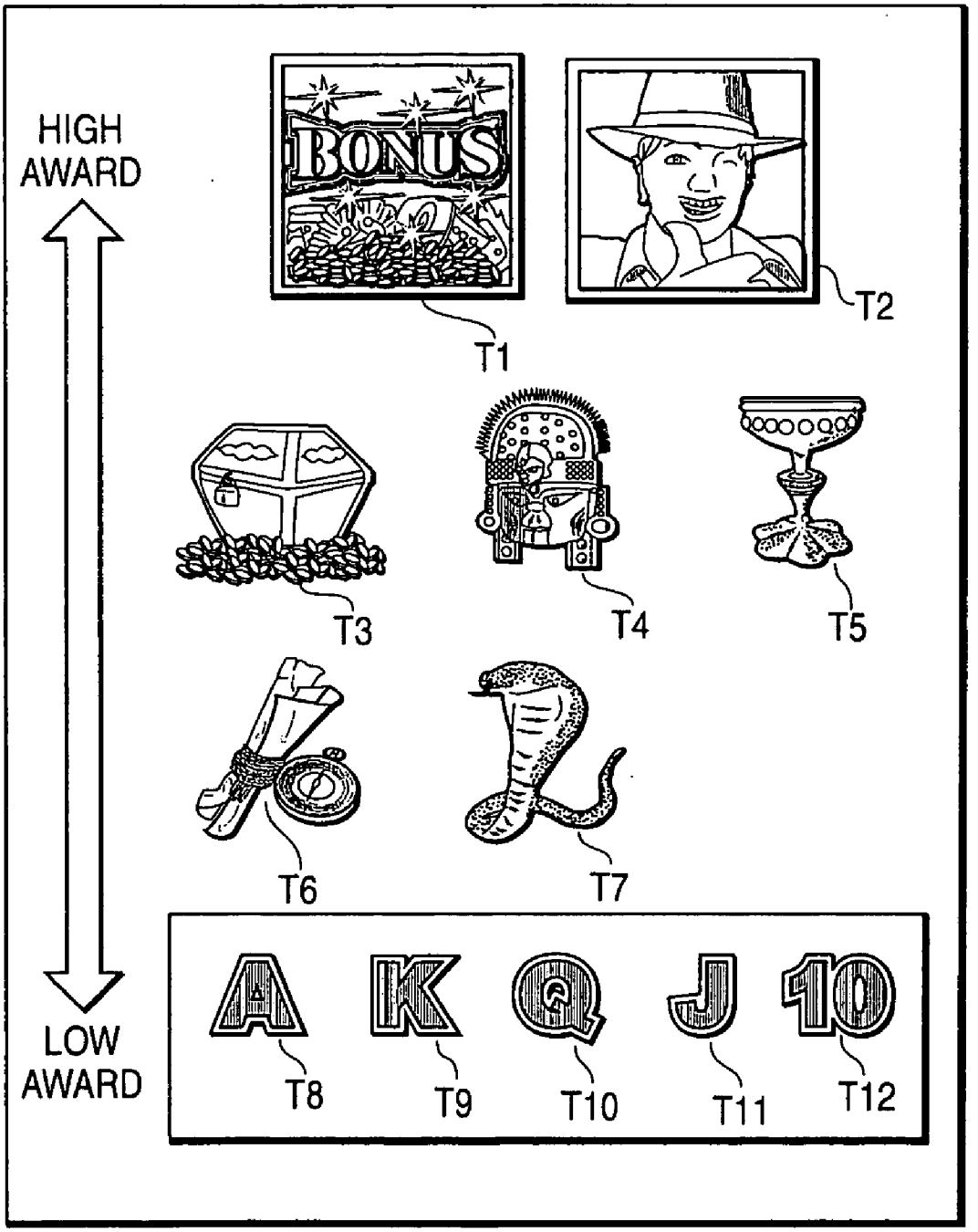
HIGH AWARD
LOW AWARD
BONUS
T1
T2
T3
T4
T5
T6
T7
A
K
Q
J
10
T8
T9
T10
T11
T12

FIG. 7A

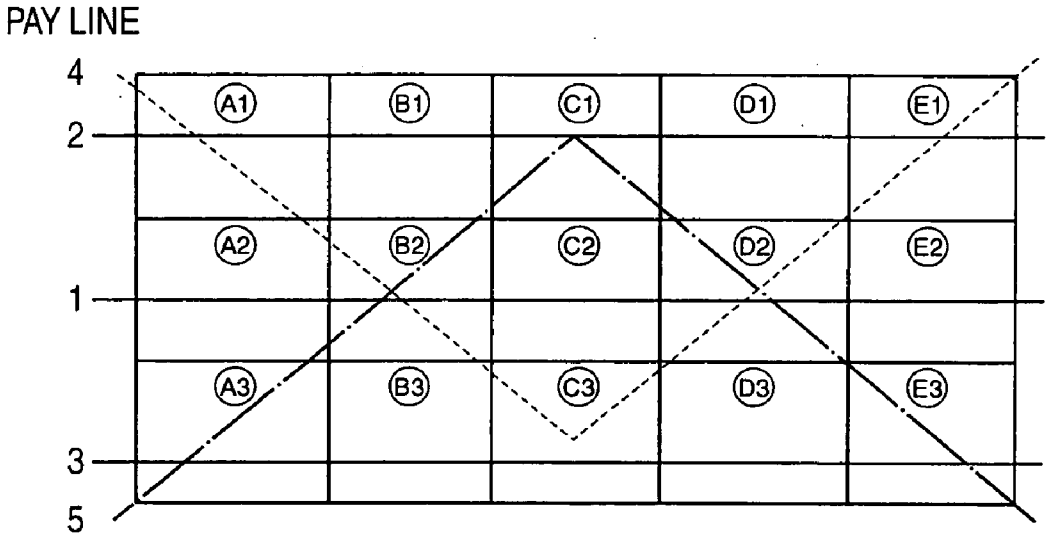
PAY LINE
4
2
1
3
5
A1
B1
C1
D1
E1
A2
B2
C2
D2
E2
A3
B3
C3
D3
E3

FIG. 7B

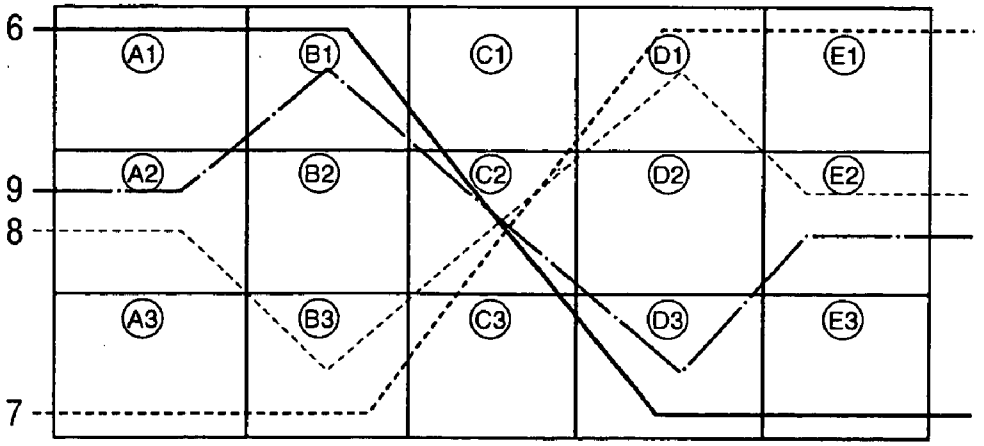
6
9
8
7
A1
B1
C1
D1
E1
A2
B2
C2
D2
E2
A3
B3
C3
D3
E3

FIG. 8

A	B	C	D	E
T12	T6	T9	T11	T12
T11	T9	T10	T12	T9
T2	T2	T2	T2	T2
T12	T6	T8	T11	T12
T11	T10	T11	T10	T9
T7	T12	T2	T2	T4
T9	T4	T5	T9	T7
T8	T8	T9	T10	T5
T10	T12	T12	T1	T10
T4	T7	T1	T9	T1
T5	T6	T9	T10	T11
T11	T9	T11	T7	T7
T3	T1	T8	T5	T10
T7	T8	T11	T10	T8
T10	T12	T10	T3	T4
T9	T6	T9	T8	T12
T6	T3	T7	T9	T6
T12	T12	T9	T6	T11
T11	T6	T10	T4	T8
T4	T7	T3	T10	T12
T10	T11	T11	T8	T11
T12	T5	T10	T5	T6
T1	T7	T6	T9	T9
T7	T6	T11	T3	T5
T12	T12	T9	T7	T8
T8	T8	T8	T10	T11
T11	T7	T12	T11	T7
T7	T10	T11	T6	T5
T9	T6	T5	T8	T10
T4	T8	T10	T11	T6

FIG. 9

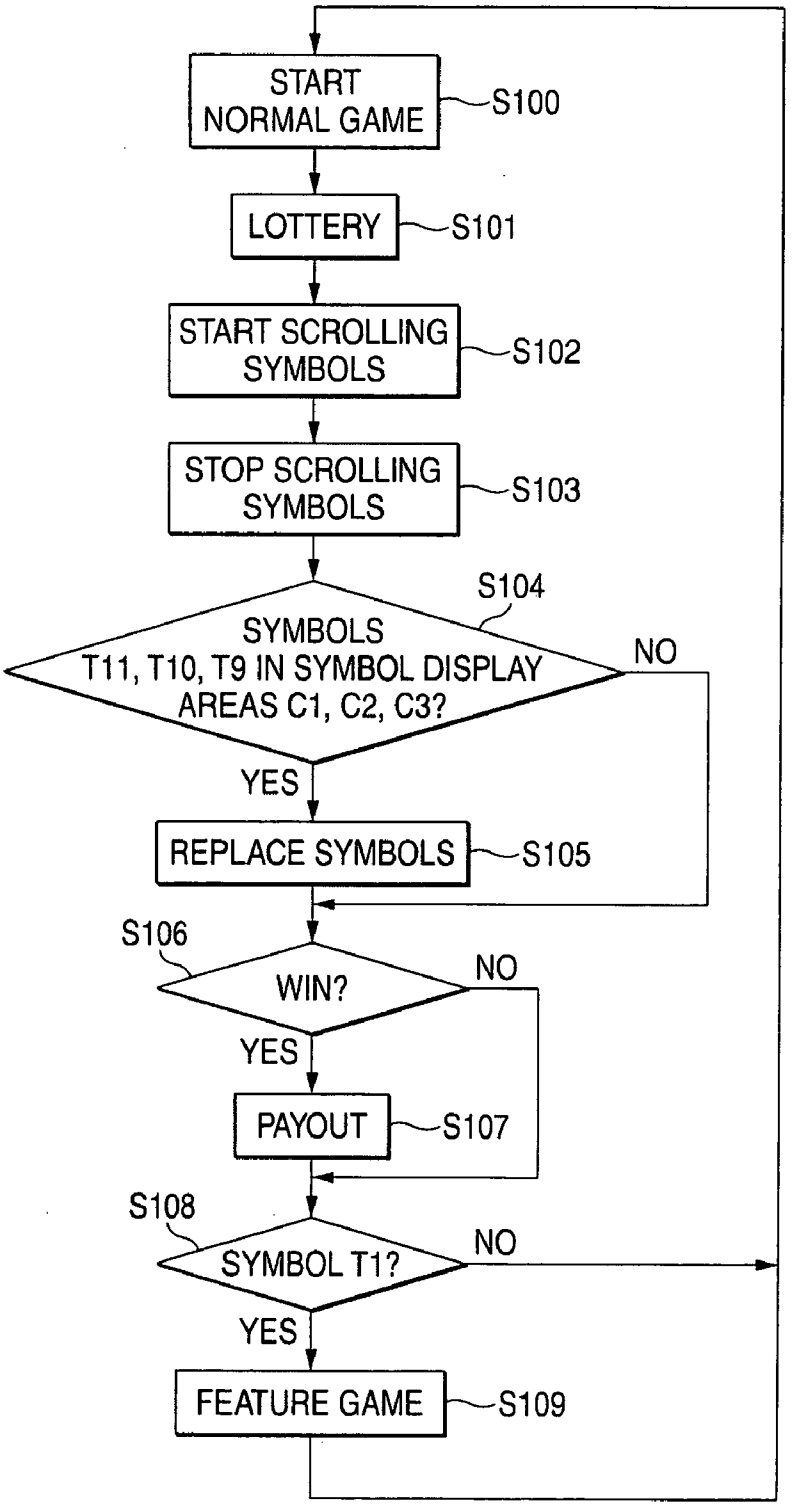
START NORMAL GAME
S100
LOTTERY
S101
START SCROLLING SYMBOLS
S102
STOP SCROLLING SYMBOLS
S103
S104
SYMBOLS T11, T10, T9 IN SYMBOL DISPLAY AREAS C1, C2, C3?
NO
YES
REPLACE SYMBOLS
S105
S106
WIN?
NO
YES
PAYOUT
S107
S108
SYMBOL T1?
NO
YES
FEATURE GAME
S109

FIG. 10

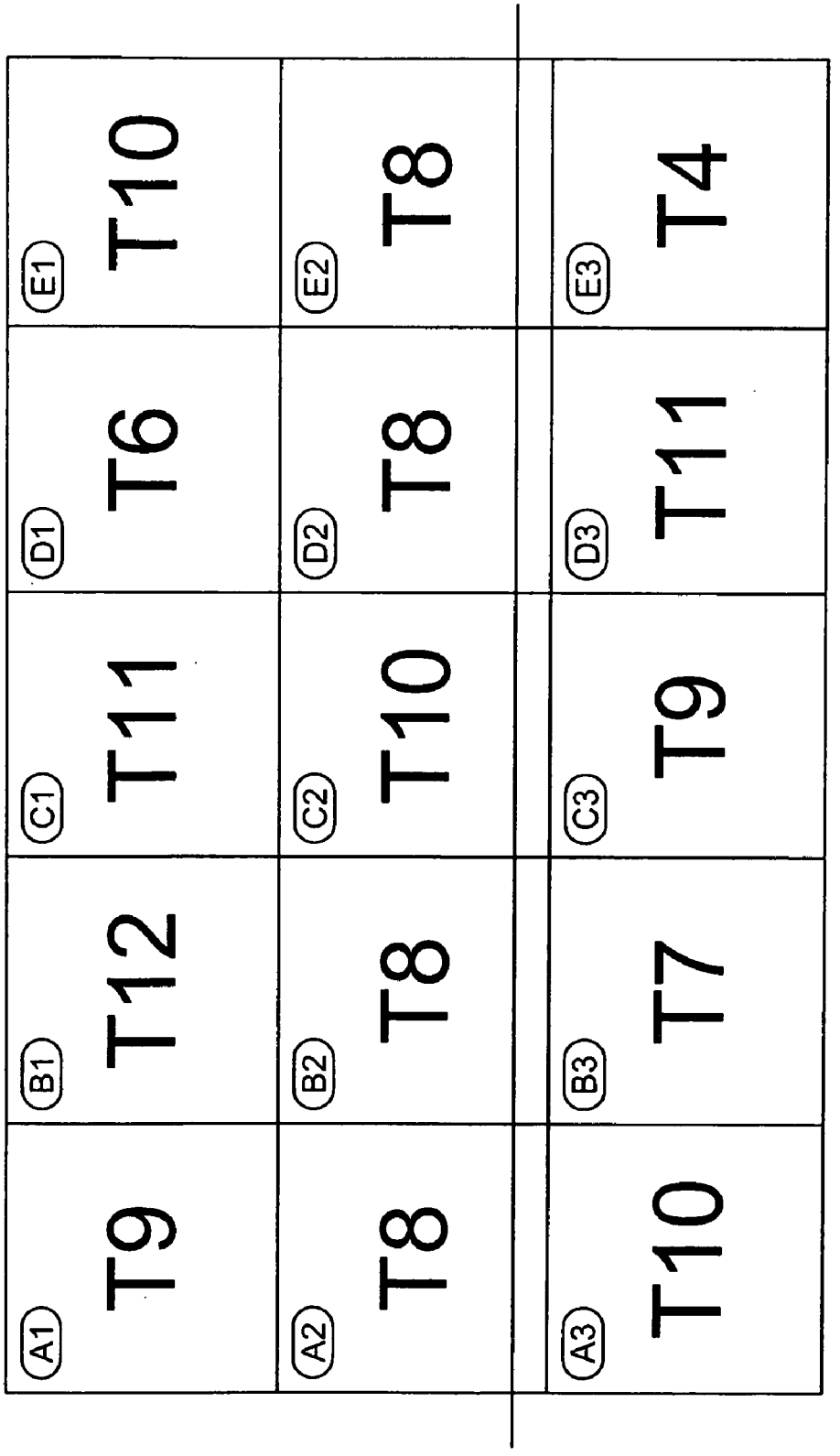
A1
T9
B1
T12
C1
T11
D1
T6
E1
T10
A2
T8
B2
T8
C2
T10
D2
T8
E2
T8
A3
T10
B3
T7
C3
T9
D3
T11
E3
T4

FIG. 11

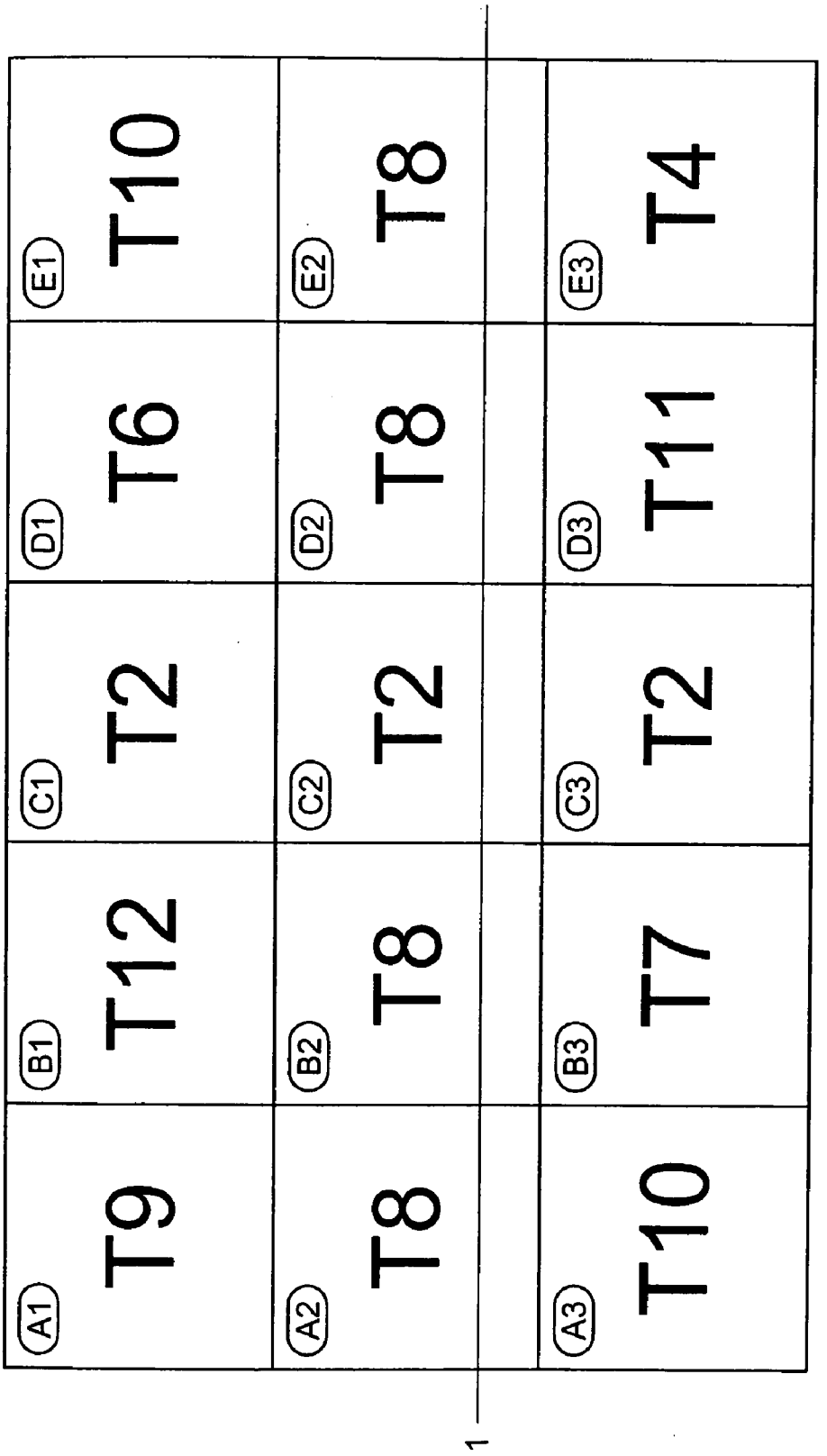
A1
T9
B1
T12
C1
T2
D1
T6
E1
T10
A2
T8
B2
T8
C2
T2
D2
T8
E2
T8
A3
T10
B3
T7
C3
T2
D3
T11
E3
T4
1

FIG. 12

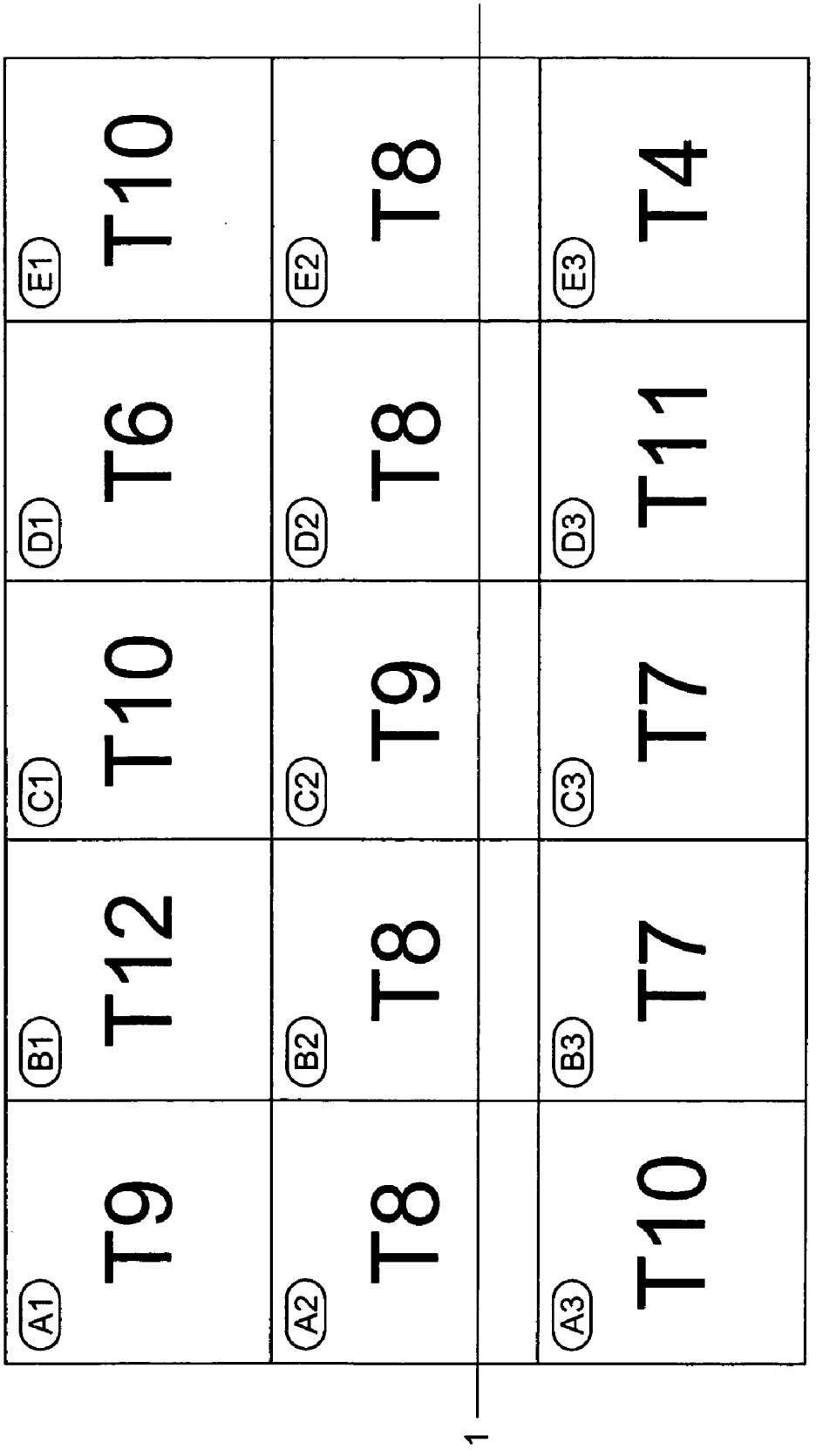
A1
T9
B1
T12
C1
T10
D1
T6
E1
T10
A2
T8
B2
T8
C2
T9
D2
T8
E2
T8
A3
T10
B3
T7
C3
T7
D3
T11
E3
T4
1

FIG. 13

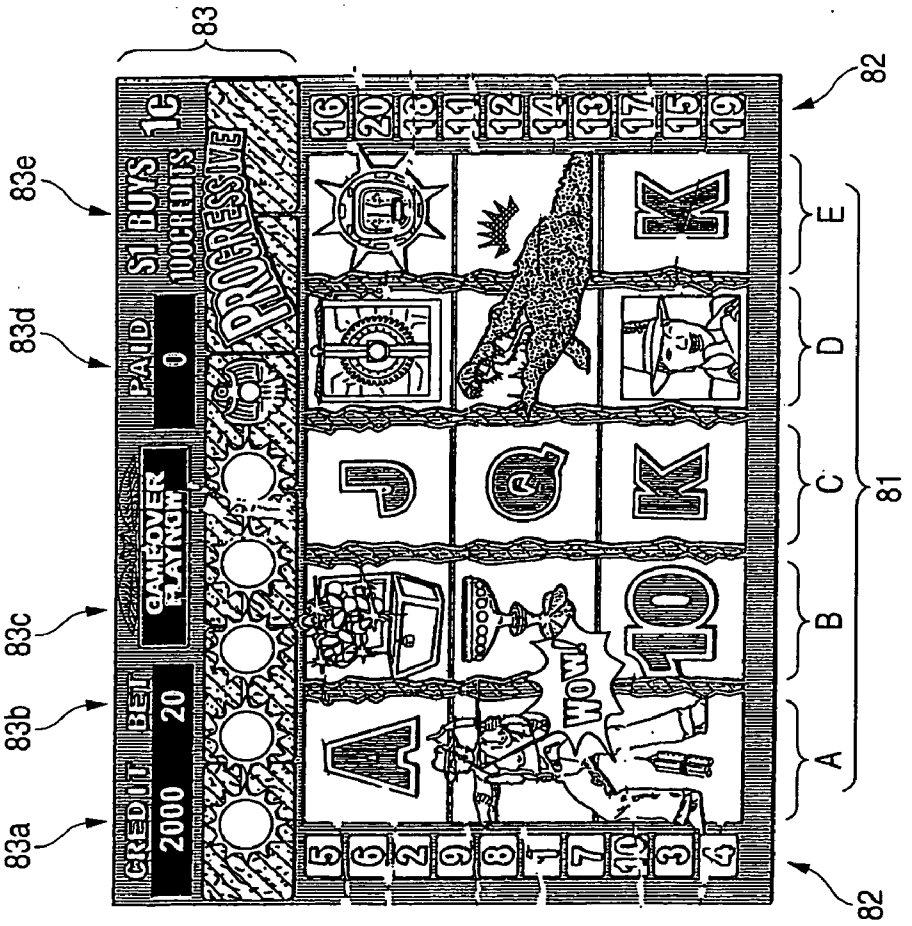
83
82
83e
83d
83c
83b
83a
81
A
B
C
D
E
CREDIT
2000
BET
20
PAID
0
GAMEOVER
PLAY AGAIN
$1 BUYS
100 CREDITS
1C
PROGRESSIVE
WOW
16
20
13
11
12
14
13
17
15
19
5
6
2
9
8
1
7
10
3
4

FIG. 14

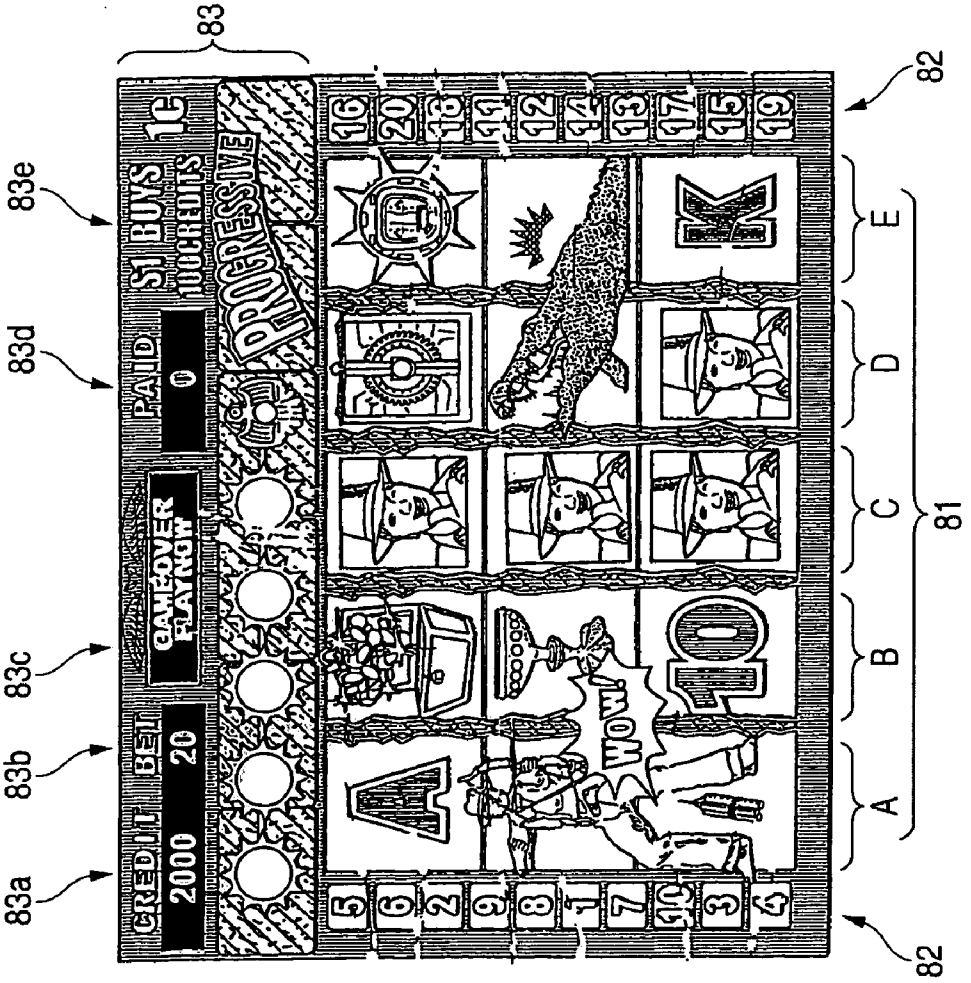
83
83a
83b
83c
83d
83e
CREDIT
2000
BET
20
GAMEOVER
PLAYNOW
PAID
0
S1 BUYS
100CREDITS
1C
PROGRESSIVE
WOW
A
B
C
D
E
81
82
82

FIG. 15

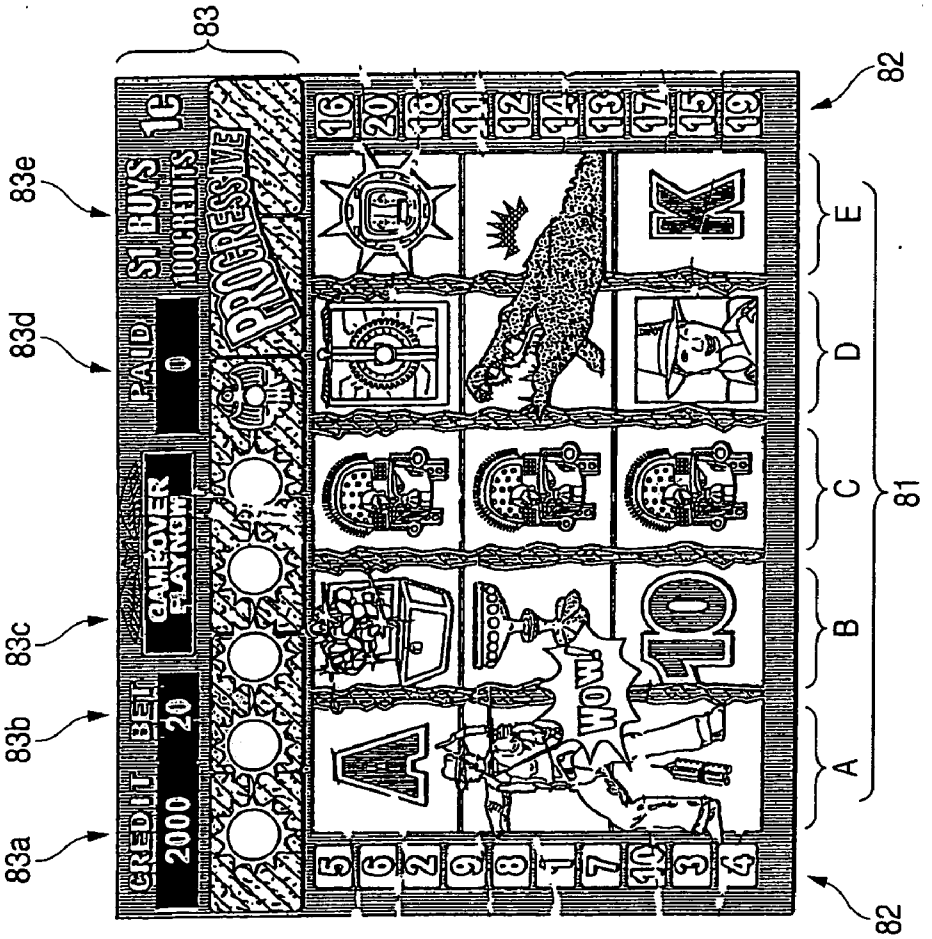
83
83e
83d
83c
83b
83a
82
82
81
A
B
C
D
E
CREDIT
BET
2000
20
GAMEOVER
PAYOUT
PAID
0
$1 BUYS
100 CREDITS
1C
PROGRESSIVE
WOW!
10

FIG. 16

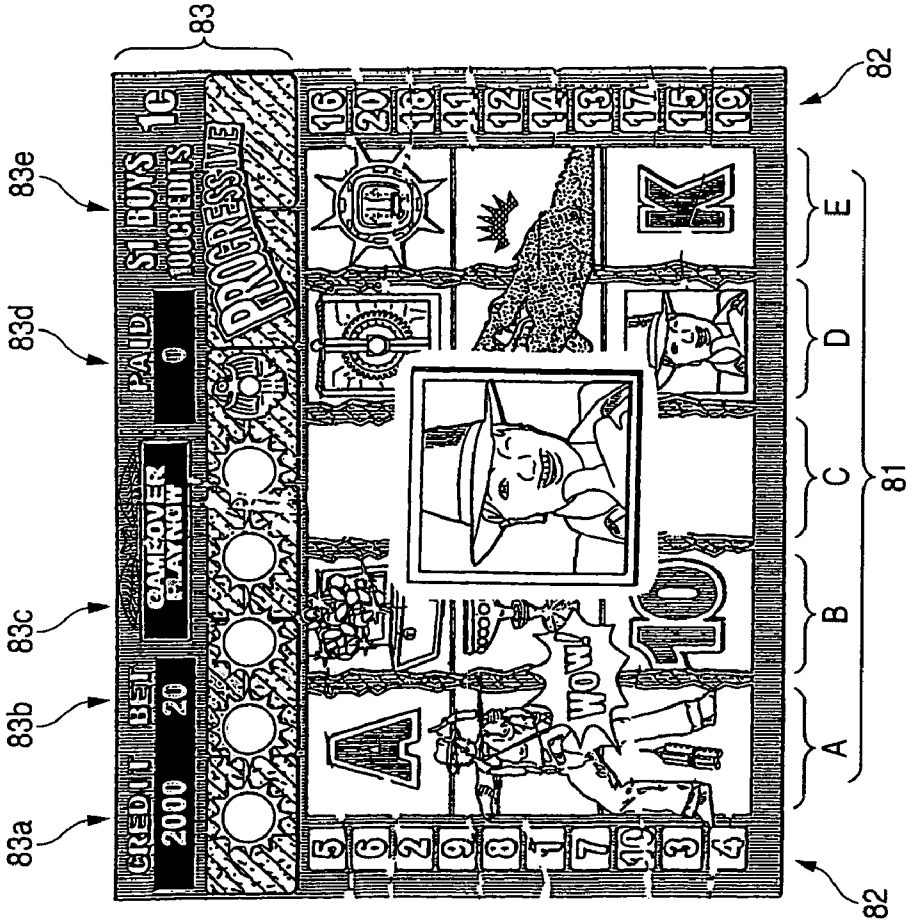
83
82
83e
83d
83c
83b
83a
81
A
B
C
D
E
$1 BUYS 1C
100 CREDITS
PAID
0
GAME OVER
PLAY NOW
CREDIT
BET
2000
20
PROGRESSIVE
WOW
16 20 18 11 12 14 13 17 15 19
5 6 2 9 8 1 7 10 3 4

GAMING MACHINE

CROSS-REFERENCE TO THE RELATED APPLICATION(S)

[0001] The present application is based upon and claims a priority from a prior Japanese Patent Application No. 2004-157923 filed on May 27, 2004, the entire contents of which are incorporated herein by reference.

BACKGROUND OF THE INVENTION

[0002] 1. Field of the Invention

[0003] The present invention relates to a gaming machine such as a slot machine in which a plurality of symbols arranged on a plurality of rows are variably displayed.

[0004] 2. Description of the Related Art

[0005] Hitherto, a slot machine has been known as a gaming machine for paying out game medium used with a game, such as medals or coins (which will be hereinafter referred to as "coins"), to a player in response to the winning state of the game. There are conventionally provided slot machines of a type having a plurality of reels (mechanical reels) each with symbols placed on the outer peripheral surface, and slot machines of a type having a plurality of reels (video reels) displayed on an image display. In the slot machines having the video reels, when a player performs predetermined operation, each of the reels on the display start to scroll and the symbols arranged in a predetermined order on each of the reels are displayed circularly. When all of the reels stop, coins are paid out in response to the combination of the symbols on activated pay lines (pay lines) An example of a conventional slot machine having video reels is disclosed, for example, in an international patent publication No. WO 00/32286 (a publication number of the Japanese national phase of which is JP-A-2002-537874).

SUMMARY OF THE INVENTION

[0006] However, in the slot machines in related arts including the slot machine disclosed in JP-A-2002-537874, the number of coins to be paid out is determined by exactly following the symbol pattern of the stopped reels (combination of the stopped symbols) and therefore the time interval between the instant at which the reels stop and the instant at which coins are paid out is a very boring time for a player. Thus, players who seek for more excitement are not satisfied with such a conventional gaming machine and are expecting for an introduction of a new gaming machine.

[0007] It is therefore one of objects of the present invention to provide a gaming machine that provides improved amusement.

[0008] According to one aspect of the invention, there is provided a gaming machine including: a display that displays a game screen having a plurality of display areas provided with a plurality of symbol display areas; a lottery unit that performs a lottery to determine symbols to be displayed in each of the symbol display areas from among a plurality of symbols; and a controller that controls the display to display the symbols determined by the lottery unit to be stopped in each of the symbol display areas after variably displaying the plurality of symbols in each of the symbol display areas, wherein when a predetermined combination of the symbols is determined by the lottery unit to be displayed in at least one of the display areas, the controller controls the display to replace the predetermined combination of the symbols into a different symbol different from the symbols in the predetermined combination after displaying the symbols determined by the lottery unit to be stopped in each of the symbol display areas.

BRIEF DESCRIPTION OF THE DRAWINGS

[0009] These and other objects and advantages of the present invention will be more fully apparent from the following detailed description taken in conjunction with the accompanying drawings, in which:

[0010] **FIG. 1** is a general perspective view to show a slot machine according to an embodiment of the invention;

[0011] **FIG. 2** is a drawing to show button layout of a control panel;

[0012] **FIG. 3** is a block diagram to show the slot machine centering on the internal configuration thereof;

[0013] **FIG. 4** is a block diagram to show an example of the internal configuration of an image control circuit;

[0014] **FIG. 5** is a drawing to show a game screen of a display;

[0015] **FIG. 6** is a drawing to show symbols displayed on the display;

[0016] **FIG. 7A** and **FIG. 7B** are drawings to show examples of pay lines of the slot machine;

[0017] **FIG. 8** is a drawing to show the symbol arrangement of the slot machine according to the embodiment of the invention;

[0018] **FIG. 9** is a flowchart to show the game progress of the slot machine;

[0019] **FIG. 10** is a drawing to show the symbol arrangement on the display in a state in which an effective display sequence is displayed in a display area C;

[0020] **FIG. 11** is a drawing to show the symbol arrangement on the display after the effective display sequence in **FIG. 10** is replaced;

[0021] **FIG. 12** is a drawing to show the symbol arrangement on the display in a state in which an effective display sequence is not displayed in the display area C;

[0022] **FIG. 13** is a drawing to show an example of the game screen where a predetermined combination of symbols (T11, T10, and T9) are arranged in a predetermined symbol display areas (C1-C3);

[0023] **FIG. 14** is a drawing to show an example of the game screen where the predetermined combination of symbols are replaced into a different symbol (symbol T2);

[0024] **FIG. 15** is a drawing to show another example of the game screen where the predetermined combination of symbols are replaced into a different symbol other than the symbol T2, which is a symbol T4; and

[0025] **FIG. 16** is a drawing to show an example of the game screen where the replaced symbol T2 is displayed enlarged.

DETAILED DESCRIPTION OF THE PREFERRED EMBODIMENTS

[0026] An embodiment of a gaming machine according to the invention will be discussed in detail with reference to the accompanying drawings. Identical or equal elements are denoted by the same reference numeral and duplicate description will be omitted.

[0027] **FIG. 1** is a perspective view to show a slot machine **1** as an example of a gaming machine according to the embodiment. The slot machine **1** has a cabinet **2** provided with a display **3** implemented as a liquid crystal display for digitally displaying a slot game. A coin insertion slot **4** for inputting game medium such as medals, tokens and coins (which will be hereinafter collectively called "coins") is provided below the display **3** at the cabinet **2**. The slot machine **1** may be provided with a bill insertion slot in addition to the coin insertion slot **4**, for allowing the player to play the slot game with a bill (paper money) or a paper token.

[0028] A control panel **5** is provided below the display **3**. The control panel **5** is roughly similar to that provided for a known slot game and is provided with **14** buttons **6***a* to **6***n* as shown in **FIG. 2**.

[0029] As shown in **FIG. 2**, there are arranged in the upper left portion of the control panel **5** a collect button (COLLECT) **6***a* for paying out the coins gained in the game and a game rule button (GAME RULES) **6***b* for entering a command for executing a help function. The remaining 12 buttons are arranged at two stages roughly at the center of the control panel **5**, the 12 buttons including: five bet buttons **6***c* to **6***g* for entering a bet number of coins (bet count); five line buttons **6***h* to **6***l* for entering a number of lines; a start feature button (START FEATURE) **6***m* for starting a feature game (for example, a free game); and a gamble button (GAMBLE) **6***n* for entering to start a transition to a double game at the termination time of the feature game.

[0030] Referring again to **FIG. 1**, a coin receiving tray **7** for the player to receive the coins paid out is provided in the lower portion of the cabinet **2**. The slot machine **1** further includes: a sub-display **8** for displaying an image not directly involved in a game (for example, description of the game contents, and the image effect of the feature game), and a pair of speakers **9**L and **9**R.

[0031] **FIG. 3** is a block diagram to show the internal configuration of the slot machine **1**. As shown in **FIG. 3**, the slot machine **1** includes a plurality of components including a microcomputer **31**.

[0032] The microcomputer **31** includes a main CPU (Central Processing Unit) **32** that serves as a controller, RAM (Random Access Memory) **33**, and ROM (Read-Only Memory) **34**.

[0033] The main CPU **32** operates in accordance with a program stored in the ROM **34** and inputs a signal from each sections (buttons) of the control panel **5** via an I/O port **39** and on the other hand, inputs/outputs a signal from/to other components for performing operation control of the whole slot machine **1**. The RAM **33** stores data and programs used for the main CPU **32** to operate. For example, the RAM **33** temporarily retains the random number sampled by a sampling circuit **36** (described later) after a game starts. The ROM **34** stores programs executed by the main CPU **32** and permanent data.

[0034] The slot machine **1** is provided with a random number generator **35**, a sampling circuit **36**, a clock pulse generation circuit **37**, and a frequency divider **38**. The random number generator **35** operates in accordance with an instruction of the main CPU **32** and generates random numbers in a given range. The sampling circuit **36** extracts any random number from the random numbers generated by the random number generator **35** in accordance with an instruction of the main CPU **32** and inputs the extracted random number to the main CPU **32**. The clock pulse generation circuit **37** generates a reference clock to operate the main CPU **32**, and the frequency divider **38** divides the reference clock in a given period and inputs the result to the main CPU **32**.

[0035] The slot machine **1** is further provided with a lamp drive circuit **59**, a lamp **60**, an LED drive circuit **61**, an LED **62**, a hopper drive circuit **63**, a hopper **64**, a payout completion signal circuit **65**, and a coin detection section **66**. The slot machine **1** is also provided with an image control circuit **71** for performing control processing of images displayed on the display **3** and the sub-display **8**, and a sound control circuit **72** for controlling sound generated from the speakers **9**L and **9**R.

[0036] The lamp drive circuit **59** outputs a signal for lighting the lamp **60** to the lamp **60** and blinks the lamp **60** during the game. As the lamp **60** is blinked, a plurality of representation is produced in accordance with the game. The LED drive circuit **61** controls the blinking of the LED **62**. The LED **62** displays information such as a number of credited coins and a number of gained coins. The hopper drive circuit **63** drives the hopper **64** under the control of the main CPU **32**. The hopper **64** performs operation to pay out coins and causes coins to be paid out into the coin receiving tray **7**.

[0037] The coin detection section **66** counts the number of coins paid out by the hopper **64** and transmits data indicating the counted number of coins (counted value) to the payout completion signal circuit **65**. The payout completion signal circuit **65** receives the data of the number of coins from the coin detection section **66** and outputs a signal indicating a completion of the payout to the main CPU **32** when the number of coins paid out reaches a certain number of coins.

[0038] The image control circuit **71** controls image display on each of the display **3** and the sub-display **8** for displaying various images including symbol images, which will be described later, on the display **3** and the sub-display **8**.

[0039] As shown in **FIG. 4**, the image control circuit **71** includes an image control CPU **71***a*, work RAM **71***b*, program ROM **71***c*, image ROM **71***d*, video RAM **71***e*, and a VDP (Video Display Processor) **71***f*. The image control CPU **71***a* determines the images to be displayed on the display **3** and the sub-display **8** in accordance with an image control program previously stored in the program ROM **71***c* based on parameters set in the microcomputer **31**. The work RAM **71***b* serves as a temporary storage for the image control CPU **71***a* to execute the image control program.

[0040] The program ROM **71***c* stores the image control program and various selection tables. The image ROM **71***d*

stores bitmap data that forms images. The bitmap data contains data of various symbol images (which will be hereinafter referred to as "symbol image group") in the embodiment. The video RAM **71***e* serves as a temporary storage for the VDP **71***f* to produce an image. The VDP **71***f* is provided with a control RAM **71***g* and produces images responsive to the display contents of the display **3** and the sub-display **8** determined by the image control CPU **71***a* and outputs each of the produced image to the display **3** and the sub-display **8**.

[**0041**] **FIG. 5** is a drawing to show an example of a game screen of the display **3**. In the embodiment, a symbol display area section **81**, a line number display section **82**, and an upper display section **83** are displayed on the display **3**.

[**0042**] The symbol display area section **81** is provided with five columns of display areas A to E each to display three symbols. Image processing is performed so that reel images with different kinds of symbols drawn are variably displayed so as to produce rotation display in the display areas A to E and that the symbols selected when the reel images stop are displayed in symbol display areas A1 to A3, B1 to B3, C1 to C3, D1 to D3, and E1 to E3.

[**0043**] The line number display section **82** displaying the line numbers indicating the pay lines is displayed on both sides of the symbol display area section **81**. Of the line numbers displayed in the line number display section **82**, the number corresponding to the pay line selected by the player is displayed as lit and the numbers not selected by the player are displayed as extinguished.

[**0044**] The upper display section **83** is formed above the symbol display area section **81**. The upper display section **83** is provided with a number-of-credited-coins display section **83***a*, a number-of-BET-coins display section **83***b*, a text information display section **83***c*, a number-of-PAID-coins display section **83***d*, and a charge display section **83***e*. The number-of-credited-coins display section **83***a* displays the number of coins credited at present, and the number-of-BET-coins display section **83***b* displays the number of coins bet on one game. The text information display section **83***c* displays text information indicating the current game state. For example, when a feature game state is entered, the text information display section **83***c* displays text information indicating the state. The number-of-PAID-coins display section **83***d* displays the number of coins that can be gained in one game, and the charge display section **83***e* displays CREDIT.

[**0045**] **FIG. 6** is a drawing to the symbols displayed in each of the symbol display areas A1 to E3. In the embodiment, each of the symbols is classified as one of a special symbol and a normal symbol. The symbols classified as the special symbol are: a bonus symbol T1; a wild symbol T2; a treasure chest symbol T3; a mask symbol T4; a chalice symbol T5; a map symbol T6; and a snake symbol T7. The symbols classified as the normal symbol are five symbols T8 to T12 each having a card mark different from each other.

[**0046**] The bonus symbol T1 classified as the special symbol is a symbol used as a trigger for entering a feature game (scatter symbol). For example, when a predetermined number of (for example, three) bonus symbols T1 or more are displayed in the display areas A to E, a transition is made to a feature game. When a predetermined number of bonus symbols T1 or more are displayed in the display areas A to E, a transition is made to a feature game and the display positions and the arrangement at the time may be any.

[**0047**] The wild symbol (specific symbol) T2 classified as the special symbol is a so-called almighty symbol, and is a symbol handled (deemed) as any of the five special symbols (the treasure chest symbol T3, the mask symbol T4, the chalice symbol T5, the map symbol T6, and the snake symbol T7) or any of the five normal symbols (symbols T8 to T12).

[**0048**] The normal symbols (card mark symbols) include an ace symbol (A) T8, a king symbol (K) T9, a queen symbol (Q) T10, a jack symbol (J) T11, and a numeric symbol (10) T12.

[**0049**] **FIG. 7A** and **FIG. 7B** are drawings to show examples of pay lines of the slot machine **1**. For easy understanding, the pay lines are shown on two separated drawings. As shown in the drawings, nine pay lines are provided (defined) by way of example. When a predetermined symbol combination is arranged on any of the pay lines, an award responsive to the symbol combination is paid out to the player. Although not show, other eleven pay lines are provided and twenty pay lines are provided (defined) in total in the embodiment. Thus, multifaceted pay lines can be placed because the number of columns is increased to five in the embodiment.

[**0050**] The slop machine **1** provides a normal game state and a feature game state in the progress of a game. The main CPU **32** of the microcomputer **31** makes a winning determination as to whether or not a feature game transition condition is satisfied. If the feature game transition condition is satisfied, a feature game is executed. The feature game transition condition is to display a predetermined number of bonus symbols T1 or more in the display areas A to E as described above. A coin payout rate in the feature game state is set higher than the coin payout rate in the normal game state. Thus, the player plays a normal game while expecting a transition to a feature game.

[**0051**] The winning determination is made depending on whether or not the same symbols are arranged on the pay lines of the 20 pay lines set in the symbol display areas A1 to A3, B1 to B3, C1 to C3, D1 to D3, and E1 to E3, specified by the player with the line buttons **6***h* to **6***l*. When the same symbols are arranged on the pay lines specified by the player, it is determined that the winning condition is satisfied, and a predetermined number of coins are paid out to the player. In the winning determination, the wild symbol T2 is deemed as an almighty symbol and is handled as an advantageous symbol for the award (the payout number of coins) in the ten kinds of symbols described above. That is, if only the ace symbol T8 and the wild symbol T2 are arranged in all symbol display areas on one play line, the same number of coins as the ace symbols T8 are arranged in all symbol display areas on one pay line are paid out to the player. In this case, the wild symbol T2 is handled as the ace symbol T8 on the pay line.

[**0052**] The arrangement of the symbols displayed in the display areas A to E will be discussed with reference to **FIG. 8**. As shown in **FIG. 8**, thirty symbols arranged in a predetermined order are scrolled circularly on the display in each of the display areas A to E; the player recognizes the

display as if mechanical reels rotated for variably displaying the symbols. In the display areas A to E, the symbols may be scrolled in the same rotation period (cycle time) or may be scrolled in different rotation periods. Three symbols of a jack symbol **T11**, a queen symbol **T10**, and a king symbol **T9** are placed continuously in this order in the symbol arrangement displayed in the display area C, of the display arrangements displayed in the five display areas A to E.

[0053] A control method of the slot machine **1** according to the embodiment will be discussed. **FIG. 9** is a flowchart to show the game progress of the slot machine **1**.

[0054] When starting main processing, the slot machine **1** first performs start acceptance processing in starting a game. More specifically, the main CPU **32** accesses the ROM **34** and transfers information concerning a basic screen, the information such as a frame displayed on the display **3**, to the image control circuit **71**, which then once stores the received information in the video RAM **71***e* and then displays the information on the display **3**. Accordingly, the slot machine **1** enters a state that is ready to provide a slot game to the player. The subsequent processing is performed as the main CPU **32** executes the information concerning a slot game of the program stored in the ROM **34** and the RAM **33**. When the slot machine **1** is operated, a normal game is played as a slot game (step **S100**).

[0055] At step **S100**, the slot machine **1** waits for the player to bet. When the player inputs the number of coins bet on one game through the coin insertion slot **4** or presses any of the bet buttons **6***c* to **6***g* when credit is left, a game is started and the process proceeds to step **S101**.

[0056] In step **S101**, the main CPU **32** performs a lottery to determine symbols to be displayed in each of the symbol display areas **A1**-**E3** from among the symbols **T1**-**T12** in accordance with the random number sent from the sampling circuit **36** to the main CPU **32**. For example, when random numbers are generated in the range of integers 0 to 400 and the random number 1 is acquired, the main CPU **32** determines to display a predetermined number of bonus symbols **T1** in one of the symbol display areas **A1**-**E3** to thereby satisfy a feature game transition condition to provide a feature game to the player. Such lottery based on the random number may be executed at any timing; for example, it may be executed when any of the bet buttons **6***c* to **6***g* is pressed or after variable display in the display areas A to E is produced.

[0057] When the symbols displayed in the display areas A to E are determined by performing the lottery, the main CPU **32** starts scrolling (variably displaying) the symbols displayed in the display areas A to E on the display **3** (step **S102**). The main CPU **32** controls the image control circuit **71** to perform image processing as if mechanical reels rotated.

[0058] Scrolling the symbols displayed in the display areas A to E is stopped in the order of the display areas A to E, whereby predetermined symbols shown in **FIG. 5**, for example, are displayed in the display areas A to E (step **S103**).

[0059] Next, the main CPU **32** determines whether or not a predetermined combination (effective display sequence: **T11**, **T10**, and **T9**, in the embodiment) of the symbols is determined in step **S101** to be displayed in a predetermined display area (display area C having display sequence of **C1**, **C2**, and **C3**, in the embodiment) (step **S104**). The CPU **32** proceeds the process to step **S105** if the predetermined combination is determined to be displayed in the predetermined display area (YES in step **S104**), and proceed the process to step **S106** if not (NO in step **S104**).

[0060] When the display sequence of the symbols arranged in the symbol display areas **C1**, **C2**, and **C3** of the display area C matches the effective display sequence of the arrangement of a jack symbol **T11**, a queen symbol **T10**, and a king symbol **T9** as in **FIGS. 10 and 13**, the main CPU **32** replaces all of the three symbols **T9**, **T10**, and **T11** to wild symbols (specific symbols) **T2** (step **S105**). Accordingly, the display sequence of the symbol display areas **C1**, **C2**, and **C3** of the display area C becomes the display sequence of the three continuous wild symbols **T2** as shown in **FIGS. 11 and 14**. The main CPU **32** proceeds the process to step **S106** after the process of step **S105**.

[0061] In step **S106**, the main CPU **32** performs a winning determination. When the same symbols are arranged on the pay line specified by the player, the main CPU **32** determines that the winning condition is satisfied, and pays out a predetermined number of coins to the player (step **S107**). That is, when the symbol arrangement in the display areas A to E is as shown in **FIGS. 10 and 13**, if attention is focused only on the symbol arrangement on the pay line of line number **1** (horizontal pay line at the middle stage; see **FIG. 7A**), the symbol arrangement is a combination of four ace symbols **T8** and one queen symbol **T10**, namely, a combination according to which no coins are paid out. In the symbol arrangement in **FIG. 10**, however, the display sequence of the symbols arranged in the display area C is the effective display sequence (display sequence in which the symbols are arranged in the order of symbol **T11**, symbol **T10**, symbol **T9** from the top to the bottom) and therefore the effective display sequence is replaced with the sequence in which three wild symbols **T2** are arranged as in **FIGS. 11 and 14**; in fact, it is determined that five ace symbols **T8** are arranged on the pay line of line number **1**, and a predetermined number of coins are paid out to the player.

[0062] When the display sequence of the symbols arranged in the symbol display areas **C1**, **C2**, and **C3** of the display area C shifts even one stage from the effective display sequence of the arrangement of the jack symbol **T11**, the queen symbol **T10**, and the king symbol **T9** as shown in **FIG. 12**, the three symbols **T9**, **T10**, and **T11** are not replaced to wild symbols (specific symbols) **T2** in step **S105**, and the winning determination is made with the symbols unreplaced.

[0063] Thus, when scrolling the symbols in the display areas A to E stops, if the predetermined effective display sequence (namely, display sequence in which the symbols are arranged in the order of symbol **T11**, symbol **T10**, symbol **T9** from the top to the bottom) is displayed in the display area C, the symbol **T9**, the symbol **T10**, and the symbol **T11** are replaced to the wild symbols **T2** of almighty symbols (see **FIGS. 11 and 14**) and the winning determination is made actually as the wild symbols **T2**, so that the arrangement/combination of the symbols on the pay line specified by the player easily becomes a symbol arrangement/combination advantageous for award. Thus, when symbols are thus replaced to the wild symbols **T2**, the player

can expect a high award. Therefore, even after scrolling the symbols in the display areas A to E stops, a sense of expectation of the player can be maintained significantly, enabling the player to continue playing a game with enjoyment without being bored. That is, the slot machine **1** provides improved amusement to the player as compared with conventional slot machines.

[**0064**] Since all of the symbols displayed in the symbol display areas C**1**, C**2**, and C**3** of the display area C are the wild symbols T**2**, every pay line contains the wild symbol T**2**. Thus, the wild symbol T**2** is always involved in the winning determination on any pay line, so that improvement in the payout rate is intended significantly. The display sequence of the symbols T**9**, T**10**, and T**11** arranged in one display area C of the five display areas A to E is thus replaced to the display sequence of the wild symbols T**2**, whereby the wild symbol T**2** is placed on each pay line at a high probability, so that the player can expect a large number of coins to be paid out.

[**0065**] Next, in step S**108**, the main CPU **32** determines that whether or not the feature game transition condition is satisfied.

[**0066**] That is, if it is determined at step S**108** that the feature game transition condition is satisfied, three or more bonus symbols T**1** are displayed in the display areas A to E and a transition is made from the normal game state to the feature game state (S**109**). In the feature game of the embodiment, in which a so-called free game is employed as the feature game, symbol scrolling is repeated without inputting any coin or pressing any of the bet buttons **6***c* to **6***g*. That is, during the feature game, the player can receive payout of coins without consuming any coin or any credited coin and thus the feature game state is a very advantageous state for the player. After the feature game, the process proceeds to step S**100**.

[**0067**] On the other hand, if it is determined at step S**108** that the no or one or two bonus symbols T**1** are displayed in the display areas A to E, the transition to the feature game transition condition is not made, and the process proceeds to step S**100**.

[**0068**] In the embodiment described above, the main CPU **32** serves as: a lottery unit that performs a lottery to determine symbols to be displayed in each of the symbol display areas from among a plurality of symbols; a controller that controls the display to display the symbols determined by the lottery unit to be stopped in each of the symbol display areas after variably displaying the plurality of symbols in each of the symbol display areas; and a determination unit that performs a winning determination in accordance with a combination of the symbols displayed in the symbol display areas.

[**0069**] The configuration of the slot machine **1** is not limited to the specific embodiment described above and various modifications can be made.

[**0070**] In the above described embodiment, the display sequence of the jack symbol T**11**, the queen symbol T**10**, and the king symbol T**9** are replaced to the wild symbols T**2** when the three symbols T**11**, T**10**, T**9** are displayed in the display area C. However, the slot machine **1** may be configured that the display sequence of the jack symbol T**11**, the queen symbol T**10**, and the king symbol T**9** are replaced to the wild symbols T**2** when the three symbols T**11**, T**10**, T**9** are displayed in any of the display areas other than the display area C, such as the display areas A, B, D, or E.

[**0071**] The display sequence of the symbols to be replaced to the wild symbols T**2** is not limited to the display sequence of the jack symbol T**11**, the queen symbol T**10**, and the king symbol T**9**, and any predetermined sequence of the various symbols T**1** to T**12** as shown in **FIG. 6** can be used.

[**0072**] In the embodiment, the symbols T**11**, T**10**, T**9** are replaced to the wild symbols T**2** when a predetermined symbol display sequence is arranged in a single display area, which is the display area C. However, the slot machine maybe configured that when a predetermined symbol display sequence is arranged continuously in a horizontal direction or a slanting direction so as to extend across a plurality of display areas, the arranged symbols are replaced to the wild symbols T**2**. The specific symbol of to be displayed after the replacement is not limited to the wild symbol T**2** and may be any symbols such as the bonus symbol T**1** for enabling the player to expect a large award finally.

[**0073**] In the embodiment, each of the display areas A to E is configured in a vertical direction as shown in **FIG. 5**. However, each of the display areas may be configured in a horizontal direction, such that the display area A is provided with the symbol display areas A**1**, B**1**, C**1**, D**1**, and E**1**, while the display area B is provided with the symbol display areas A**2**, B**2**, C**2**, D**2**, and E**2**, and the display area C is provided with the symbol display areas A**3**, B**3**, C**3**, D**3**, and E**3**.

[**0074**] In the embodiment, each of the reel images is provided for each of the display areas A to E, respectively, and the image processing is performed so that the reel images are displayed to rotate in the vertical direction to variably display the symbols in the symbol display areas. However, the image processing may be performed so that the reel images are displayed to rotate in the horizontal direction.

[**0075**] In the embodiment, a predetermined effective display sequence (sequence of the symbols T**11**, T**10**, T**9**) is replaced to the specific symbol display sequence (sequence of the wild symbols T**2**) in the normal game state. However, the replacement from the effective display sequence to the specific symbol display sequence may be caused to occur only in the feature game state or may be caused to occur both in the normal game state and in the feature game state.

[**0076**] In the embodiment, the winning determination (step S**106**) is performed after the stopping the scrolling symbols (step S**103**) However, a timing to perform the winning determination is not limited to the timing described in the embodiment, and the winning determination may be performed at an arbitrary timing. For example, the slot machine **1** may be configured to perform the winning determination after performing the lottery to determine symbols to be displayed in each of the symbol display areas A**1**-E**3** in step S**101**.

[**0077**] In the embodiment, the winning determination is performed only once in one normal game. However, the slot machine **1** may be configured to perform the winning determination for a plurality of times. For example, the slot machine **1** may be configured to perform the winning determination when the symbols determined by the lottery

performed in step S101 are stopped in the symbol display areas (e.g., between step S103 and step S104), and perform the winning determination again after the predetermined combination of the symbols (symbols T11, T10, and T9) are replaced into the different symbol (symbol T2).

[0078] In the embodiment, the symbol (the different symbol) to be replaced when the predetermined combination of the symbols (symbols T11, T10, and T9) are stopped in the predetermined symbol display areas (C1-C3) is predefined as the wild symbol T2 that is deemed in the winning determination as any of the plurality of symbols T1, and T3-T12. However, the different symbol that is displayed after the replacement is not limited to the wild symbol T2 and may be any one of the plurality of symbols T1-T12. FIG. 15 shows one example that the predetermined combination of symbols is replaced into the mask symbol T4.

[0079] The different symbol to be replaced may be determined by performing a lottery from among the plurality of symbols T1-T12. For example, the slot machine 1 may be configured that the main CPU 32 performs a lottery to determine the different symbol from among the plurality of symbols in advance to step S105, and the main CPU 32 controls the display 3 to replace the predetermined combination of the symbols into the different symbol determined by the lottery.

[0080] In the embodiment, the replacement of the symbols in step 105 is performed only once. However, the slot machine 1 may be configured to perform the replacement for a plurality of times. For example, the slot machine 1 may be configured that the main CPU 32 performs a lottery to determine a plurality of the different symbols to be displayed in the replacement from among the plurality of symbols, and the main CPU 32 controls the display 3 to replace the different symbols sequentially after replacing the predetermined combination of the symbols into one of the different symbols. In this case, the main CPU 32 may perform the winning determination each time the replacement is made.

[0081] It is preferable to configure the main CPU 32 to control the display 3 to display the different symbol being applied with a special image effect. The special image effect may be any one of or combination of arbitrary image effects such as scaling, deforming, flashing, and the like. FIG. 16 shows one example that the replaced different symbol (symbol T2) is enlarged as one symbol.

[0082] As described with reference to the embodiment, there is provided a gaming machine including a display having a plurality of symbol display areas where a plurality of continuous symbols are variably displayed; and a controller for executing a predetermined program and controlling the display contents of the display, characterized in that when the display sequence of the symbols arranged in at least one of the symbol display areas is a predetermined effective display sequence, the controller replaces the display sequence of the symbols to a specific symbol display sequence advantageous for an award in accordance with the program.

[0083] In the gaming machine, when the display sequence of the symbols in at least one of the symbol display areas is the predetermined effective display sequence, the display sequence of the symbols is replaced to the specific symbol display sequence. As the display sequence of the symbols is replaced, the award becomes more advantageous. That is, if the display sequence of the symbols is replaced to the specific symbol display sequence, the player of the slot machine 1 can expect a larger payout than that before the symbol sequence is replaced and thus can continue playing a game with enjoyment without being bored.

[0084] When the display sequence of the symbols arranged in one of the symbol display areas is the predetermined effective display sequence, preferably the controller replaces the display sequence of the symbols to the specific symbol display sequence. In this case, the specific symbols are placed on the activated pay line used for award determination at a high probability, so that the player can expect a larger number of coins to be paid out.

[0085] Accordingly, the gaming machine provides improved amusement as compared with conventional gaming machines.

[0086] The foregoing description of the embodiment of the invention has been presented for purposes of illustration and description. It is not intended to be exhaustive or to limit the invention to the precise form disclosed, and modifications and variations are possible in light of the above teachings or may be acquired from practice of the invention. The embodiment was chosen and described in order to explain the principles of the invention and its practical application to enable those skilled in the art to utilize the invention in various embodiments and with various modifications as are suited to the particular use contemplated. It is intended that the scope of the invention be defined by the claims appended hereto, and their equivalents.

What is claimed is:

1. A gaming machine comprising:

a display that displays a game screen having a plurality of display areas provided with a plurality of symbol display areas;

a lottery unit that performs a lottery to determine symbols to be displayed in each of the symbol display areas from among a plurality of symbols; and

a controller that controls the display to display the symbols determined by the lottery unit to be stopped in each of the symbol display areas after variably displaying the plurality of symbols in each of the symbol display areas,

wherein when a predetermined combination of the symbols is determined by the lottery unit to be displayed in at least one of the display areas, the controller controls the display to replace the predetermined combination of the symbols into a different symbol different from the symbols in the predetermined combination after displaying the symbols determined by the lottery unit to be stopped in each of the symbol display areas.

2. The gaming machine according to claim 1 further comprising a determination unit that performs a winning determination in accordance with a combination of the symbols displayed in the symbol display areas.

3. The gaming machine according to claim 2, wherein at least one pay line is defined in the symbol display areas,

wherein the determination unit performs the winning determination in accordance with a combination of the symbols stopped on the pay line.

4. The gaming machine according to claim 2, wherein the determination unit performs the winning determination when the symbols determined by the lottery unit are stopped in the symbol display areas, and

wherein the determination unit performs the winning determination after the predetermined combination of the symbols are replaced into the different symbol.

5. The gaming machine according to claim 1, wherein the lottery unit performs a lottery to determine the different symbol from among the plurality of symbols, and

wherein the controller controls the display to replace the predetermined combination of the symbols into the different symbol determined by the lottery unit.

6. The gaming machine according to claim 1, wherein the lottery unit performs a lottery to determine a plurality of the different symbols from among the plurality of symbols, and

wherein the controller controls the display to replace the different symbols sequentially after replacing the predetermined combination of the symbols into one of the different symbols.

7. The gaming machine according to claim 6 further comprising a determination unit that performs a winning determination in accordance with a combination of the symbols displayed in the symbol display areas,

wherein the determination unit performs the winning determination each time the controller controls the display to replace the different symbols.

8. The gaming machine according to claim 2, wherein each of the symbols is classified as one of a special symbol and a normal symbol, and

wherein the gaming machine further comprises a payout unit that performs larger payout in a case where a win based on the special symbol is determined by the determination unit than in a case where a win based on the normal symbol is determined by the determination unit.

9. The gaming machine according to claim 8, wherein when the predetermined combination of the symbols is determined by the lottery unit to be displayed in the predetermined symbol display areas, the controller controls the display to replace the predetermined combination of the symbols into the different symbol that is classified as the special symbol after displaying the symbols determined by the lottery unit to be stopped in each of the symbol display areas.

10. The gaming machine according to claim 2, wherein the different symbol is a wild symbol that is deemed by the determination unit as at least one of the plurality of symbols.

11. The gaming machine according to claim 1, wherein the display is provided with at least one reel that rotates and has a periphery on which the plurality of symbols are arranged, and

wherein the display displays the plurality of symbols arranged on the periphery of the reel in each of the symbol display areas.

12. The gaming machine according to claim 11, wherein the reel is a video reel that is displayed on the display as a video image.

13. The gaming machine according to claim 11, wherein the reel is a mechanical reel that is rotatably provided behind the display.

14. The gaming machine according to claim 1,* wherein the controller controls the display to display the different symbol being applied with a special image effect.

15. The gaming machine according to claim 14, wherein the controller controls the display to display the different symbol to be enlarged as one symbol.

* * * * *