S. R. SHOUP

STRIP FEED DEVICE.

APPLICATION FILED APR. 10, 1918

1,415,721.

Patented May 9, 1922.

2 SHEETS—SHEET 1.

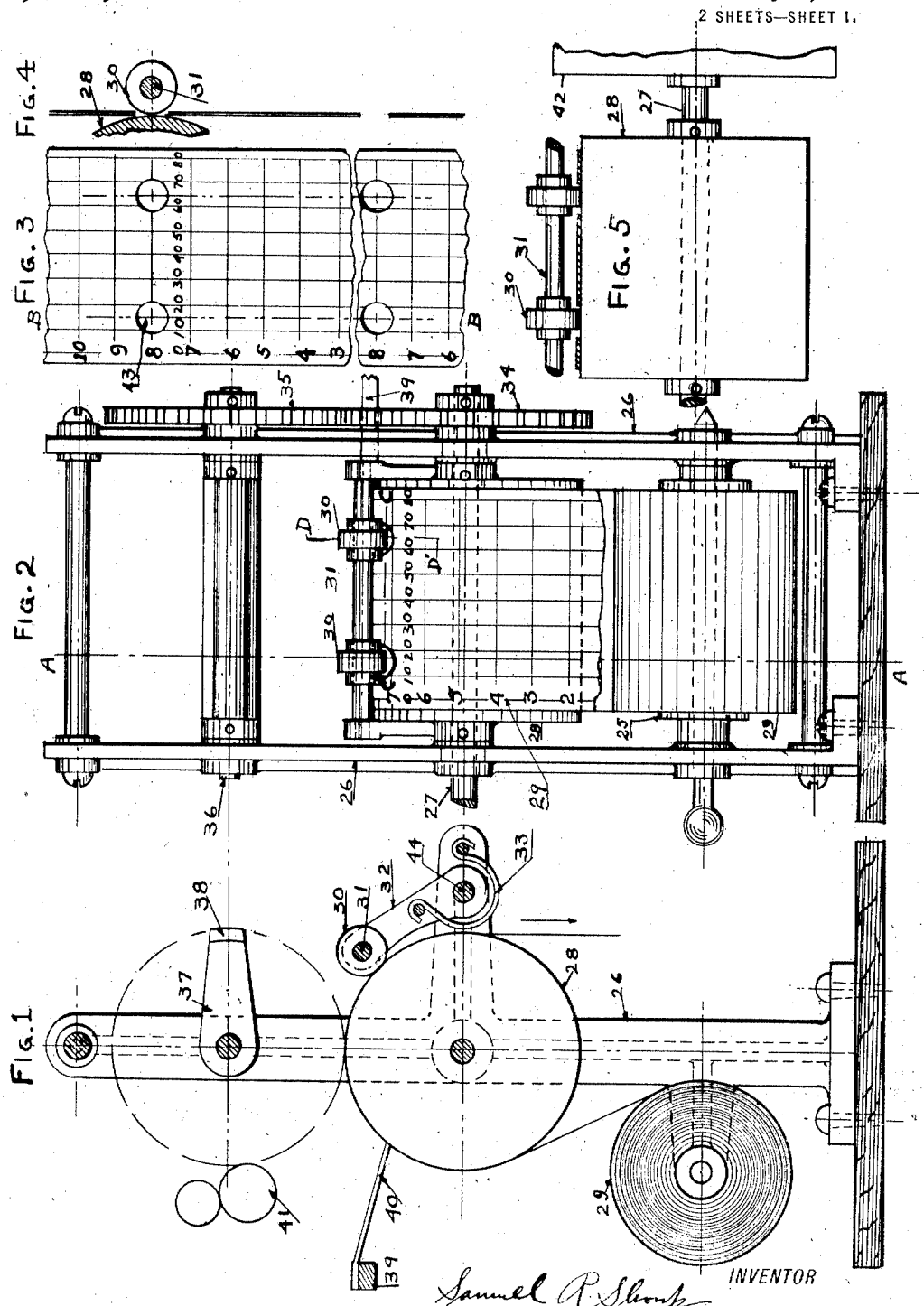

INVENTOR

Samuel R. Shoup

BY

Clarence G. Campbell, Jr. ATTORNEY

S. R. SHOUP.

STRIP FEED DEVICE.

APPLICATION FILED APR. 10, 1918.

1,415,721.

Patented May 9, 1922.

2 SHEETS—SHEET 2.

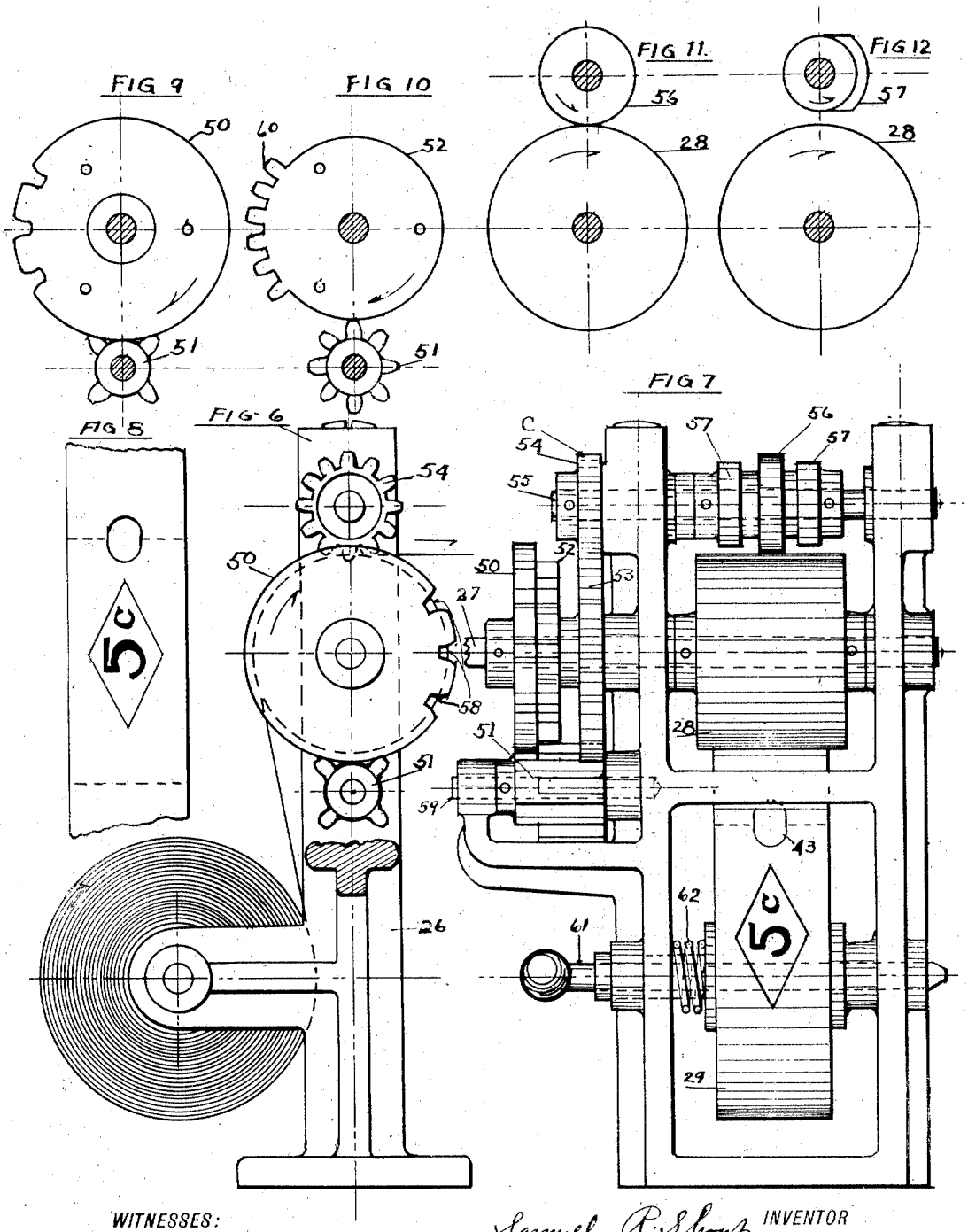

WITNESSES:

Samuel R. Shoup INVENTOR

BY

Clarence J. Campbell, Jr. ATTORNEY

UNITED STATES PATENT OFFICE.

SAMUEL R. SHOUP, OF WEEHAWKEN, NEW JERSEY.

STRIP-FEED DEVICE.

1,415,721. Specification of Letters Patent. Patented May 9, 1922.

Application filed April 10, 1918. Serial No. 227,759.

To all whom it may concern:

Be it known that I, SAMUEL R. SHOUP, a citizen of the United States, residing at 454 Gregory Avenue, Weehawken, in the county of Hudson and State of New Jersey, have invented certain new and useful Improvements in a Strip-Feed Device, of which the following is a specification.

This invention relates to a strip feeding mechanism which is adapted to be used in connection with various automatic machines in which it is necessary to have a continuous feeding of a roll of paper or other suitable material and its novelty consists in the construction and adaptation of the parts as will be more specifically pointed out hereinafter.

It has been impossible to obtain uniform feeding from paper feeding mechanisms used in conjunction with automatic machines because the paper varies in elasticity, the machine varies as to tension and the atmosphere constantly varies. The result has been that no paper feeding mechanism would feed the paper uniformly so that the printed form or measured length would always be fed as intended. My device overcomes this difficulty so that none of the above mentioned causes of variation will in any way affect the uniform feeding of the paper.

Referring to the drawings, Figure 1 is a sectional end elevation of my improved feeding device on the line A—A in Figure 2. Fig. 2 is a front elevation of one embodiment of my device. Fig. 3 is a plan view of a printed chart adapted to be used on my device. Figure 4 is a longitudinal section on the line D—D of Figure 2. Figure 5 is a transverse section from a chart on the line C—C in Figure 2 with certain parts broken away. Figure 6 is an end elevation of a modified form of my device. Figure 7 is a front elevation of the device shown in Figure 6. Figure 8 is a ticket with punched holes adapted to be used on my device. Figures 9, 10, 11 and 12 are details of the embodiment of my device shown in Figure 6.

In the drawings 26 is the frame work of my device on which is mounted the several operating parts, 27 is a rotatable shaft operated from some outside source, such as a clock mechanism 42. Mounted on and rigidly secured to the shaft 27 is a cylinder 28. A roll of paper or other material of suitable printed forms 29 is adapted to be wound on the feed spindle 25 which rotates freely and this roll of paper 29 has punched in it at regular intervals, holes 43 and it is fed over the cylinder 28 passing between the rotating cylinder 28 and two narrow faced grip rolls 30 which are mounted so as to revolve freely on shaft 31 which is carried by levers 32. Levers 32 are mounted on the shaft 44 said shaft being carried by the frame 26. Levers 32 are kept under tension by means of springs 33 which are mounted to maintain a pressure of the rolls 30 against the cylinder 28.

Rigidly secured to the shaft 27 is a gear 34 which meshes with gear 35 which is rigidly secured to shaft 36. Shaft 36 is mounted in the frame 26, and rigidly secured to 36 so as to revolve with it is a segment of a cylinder, 37, which has substantially the same radius as cylinder 28. The segment 37 has a gripping member 38 on its outer periphery which may be rubber type of whatever lettering which it is desired to print on the forms 29. A suitable inking device 41 carried by the frame 26 is adapted to cooperate with the type of the gripping member 38 inking it on each revolution. The distance between the punched holes 43 in the printed forms 29 should be less than the circumference described by the revolution of the segment 37.

The printed forms 29, as illustrated in the drawings, are adapted for use on a continuous recording steam gage and for this purpose a pen 40 is mounted on the frame 26 at 39 so as to trace a continuous line on the printed forms 29 as they pass through the device.

In the operation of the device as illustrated in Figures 1 to 5 inclusive, the printed forms 29 having been run over the cylinder 28 from the spindle 25 between the rolls 30 and the cylinder 28, as the cylinder 28 is started to revolve by means of the clock mechanism or other power 42, the printed forms 29 will pass over the rotating cylinder 28 being gripped against said cylinder by means of the down pressed rolls 30 until the holes 43 come to the rolls 30 whereupon the forms 29 will stop advancing as rolls 30 will rotate freely in the holes 43 against the cylinder 28.

As the shaft 27 rotates the gear 34 secured thereto rotates with it thereby rotating the gear 35 with which it is meshed in the opposite direction and this in turn rotating the shaft 36 to which the gear 35 is rigidly secured. Segment 37 being rigidly secured to the shaft 36 also rotates in the same direction as the gear 35 and as it reaches its lowermost position will by means of its periphery 38 grip the printed forms 29 against the rotating cylinder 28 thereby thrusting them forward sufficiently to enable the rolls 30 to again grip the printed forms 29 against the cylinder 28 until another revolution is completed and the rolls 30 register again in another set of holes 43 whereupon the operation will be again repeated.

Another embodiment of my invention is shown in Figures 6 to 12 inclusive. Referring to the drawings shaft 27 is loosely mounted in frame 26 operated by a clock or some other source of power and is constantly in operation when the power is applied. Mounted on and rigidly secured to shaft 27 is a gear blank 50 which has three spaces 58 cut therein adapted to receive the teeth of pinion gear 51 which is loosely mounted on shaft 59 so that the sector of 50 carrying the spaces 58 may allow the rotation of 51 when it is rotated by segmental gear 52. Shaft 59 is mounted so as to rotate in frame 26. Segmental gear 52 is loosely mounted on shaft 27, and rigidly secured to gear blank 50 with the teeth 60 in juxtaposition to the cut outs 58 of gear blank 50. Gear 53 is loosely mounted on shaft 27 and meshes with pinion gear 51 on one side and with gear 54 on the other side which is rigidly secured to a shaft 55 which is loosely mounted in the frame 26. There is loosely mounted on shaft 55 a grip wheel 56 which always grips a cylinder 28 which is rigidly secured to the shaft 27. Rigidly secured to the shaft 55 are segmental grip wheels 57 adapted to grip the cylinder 28 only during the contact of said segmental grips with the surface of the cylinder 28 and spindle 61 is loosely mounted in the frame 26 and carries a tension spring 62 tending to keep the strip of tickets 29 under back tension. The strip of tickets 29 has holes 43 punched at uniform intervals therein and is adapted to pass over cylinder 28 between the grip 56 and the cylinder 28.

In operation the starting of the power will revolve the shaft 27 thereby revolving the gear blank 50 and the segmental gear 52 until the teeth 60 of the segmental gear 52 mesh with the teeth of gear 51 thereby rotating the same. The rotation of gear 51 rotates gear 53 which is in mesh therewith and gear 54 which is also in mesh with 53 on the other side. As 54 revolves shaft 55 rigidly secured thereto is revolved. Cylinder 28 is always in rotation so long as the shaft 27 is rotating and the strip of tickets 29 will pass forward between the gripper 56 and cylinder 28 until gripper 56 registers in one of the holes 43 whereupon the strip of tickets 29 stops until the segmental grips 57 grip the cylinder 28 and the ticket strip 29, starting 29 forward again until the gripper 56 again registers in another hole 43 whereupon the operation is repeated.

It will be understood that the two embodiments of my invention illustrated and described herein are merely illustrative and that the invention is capable of being embodied in many other forms without departing from the spirit of the invention.

I claim:—

1. In a device of the type described a rotatable cylinder, a strip having punched holes therein adapted to pass thereover, a grip wheel adapted to register the punched holes in said strip together with a segmental grip wheel adapted to grip and advance the strip intermittently.

2. In a device of the type described a rotatable cylinder, a grip wheel, a strip adapted to pass between said cylinder and wheel, and a segment of a grip wheel operating intermittently on said strip.

3. In a device of the type described a cylinder, a grip wheel, a strip passing between said wheel and cylinder and rotated between same intermittently, together with a grip wheel segment adapted to intermittently set said strip in operation.

4. A device having a rotatable cylinder, a grip wheel, operated by said cylinder and running free on a shaft and adapted to grip and advance a strip with said cylinder, together with a segment rigidly fastened to a shaft geared to said cylinder and actuated so as to intermittently grip the strip and cause it to advance with the cylinder.

5. In a device of the type described the combination of a normally rotating cylinder, a narrow faced wheel in continuous gripping contact with the cylinder, a strip adapted to pass between the wheel and cylinder punched at intervals to receive the said narrow faced gripping wheel, and a second geared gripping means for reestablishing the grip on said strip.

6. In a device of the type described the combination of a normally rotating cylinder, a narrow faced wheel in gripping contact with the cylinder, a printed chart strip adapted to pass between the wheel and cylinder punched at intervals to receive the gripping wheel, and a second geared intermittent gripping means.

7. In a device of the type described the combination of a cylinder rotated by a clock mechanism a narrow faced wheel in gripping contact with the cylinder, a strip adapted to be gripped and pass between said wheel and cylinder punched at intervals to receive the

gripping wheel, and a geared gripping means adapted to grip and advance the strip intermittently.

8. In a device of the type described the combination of a normally rotating cylinder, a wheel in gripping contact with the cylinder, a strip adapted to be gripped and pass between, means carried by the strip for interrupting said grip, consisting of holes punched in the strip at regular intervals and geared means for reestablishing the grip.

In testimony whereof I affix my signature.

SAMUEL R. SHOUP.