Aug. 5, 1958 R. T. MOORE 2,846,081

BOOM LOADER FOR OVERHEAD CRANE

Filed Feb. 7, 1955 4 Sheets-Sheet 1

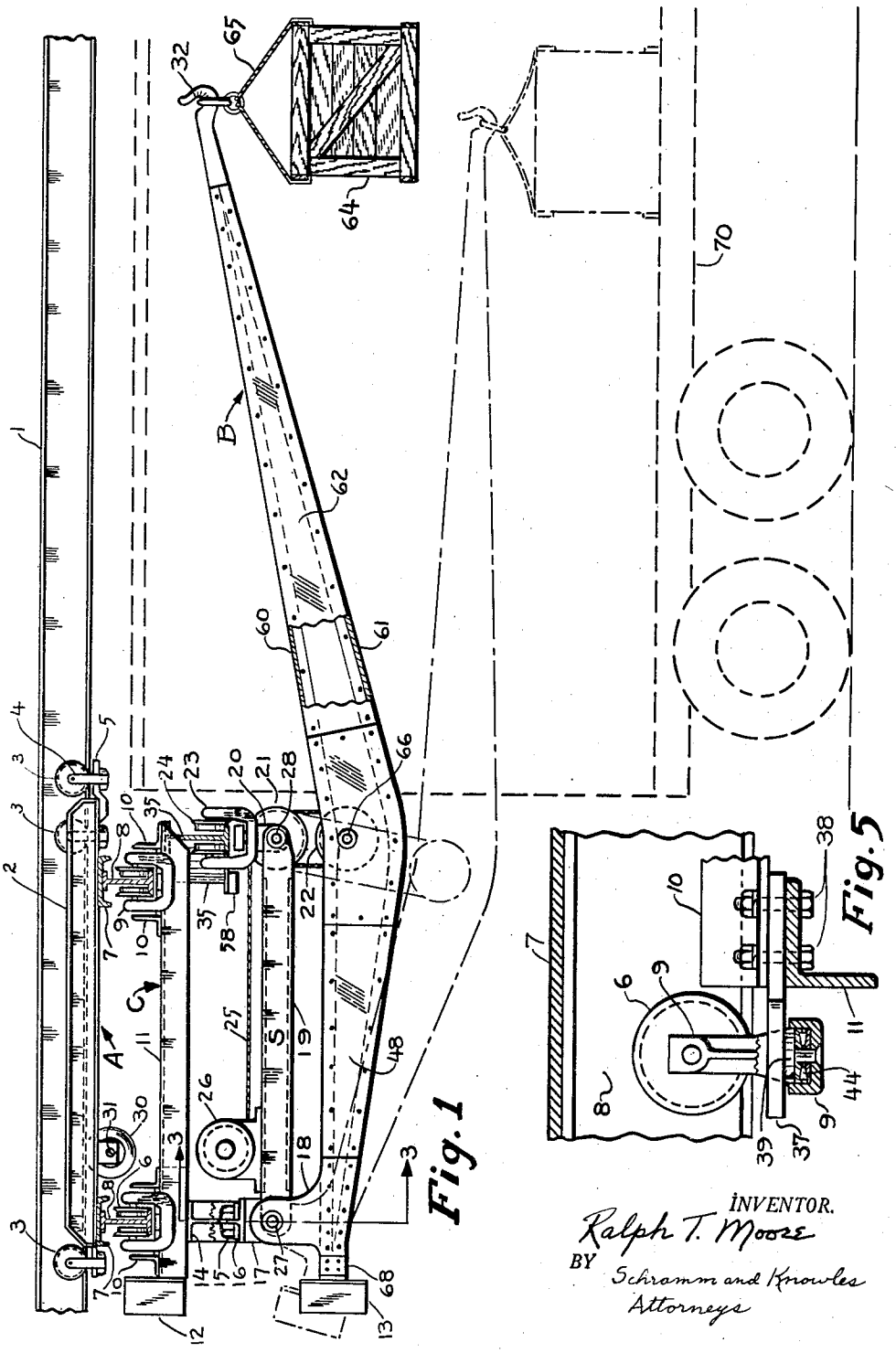

Fig. 1

Fig. 5

INVENTOR.
Ralph T. Moore
BY Schramm and Knowles
Attorneys

BOOM LOADER FOR OVERHEAD CRANE

Filed Feb. 7, 1955 4 Sheets-Sheet 2

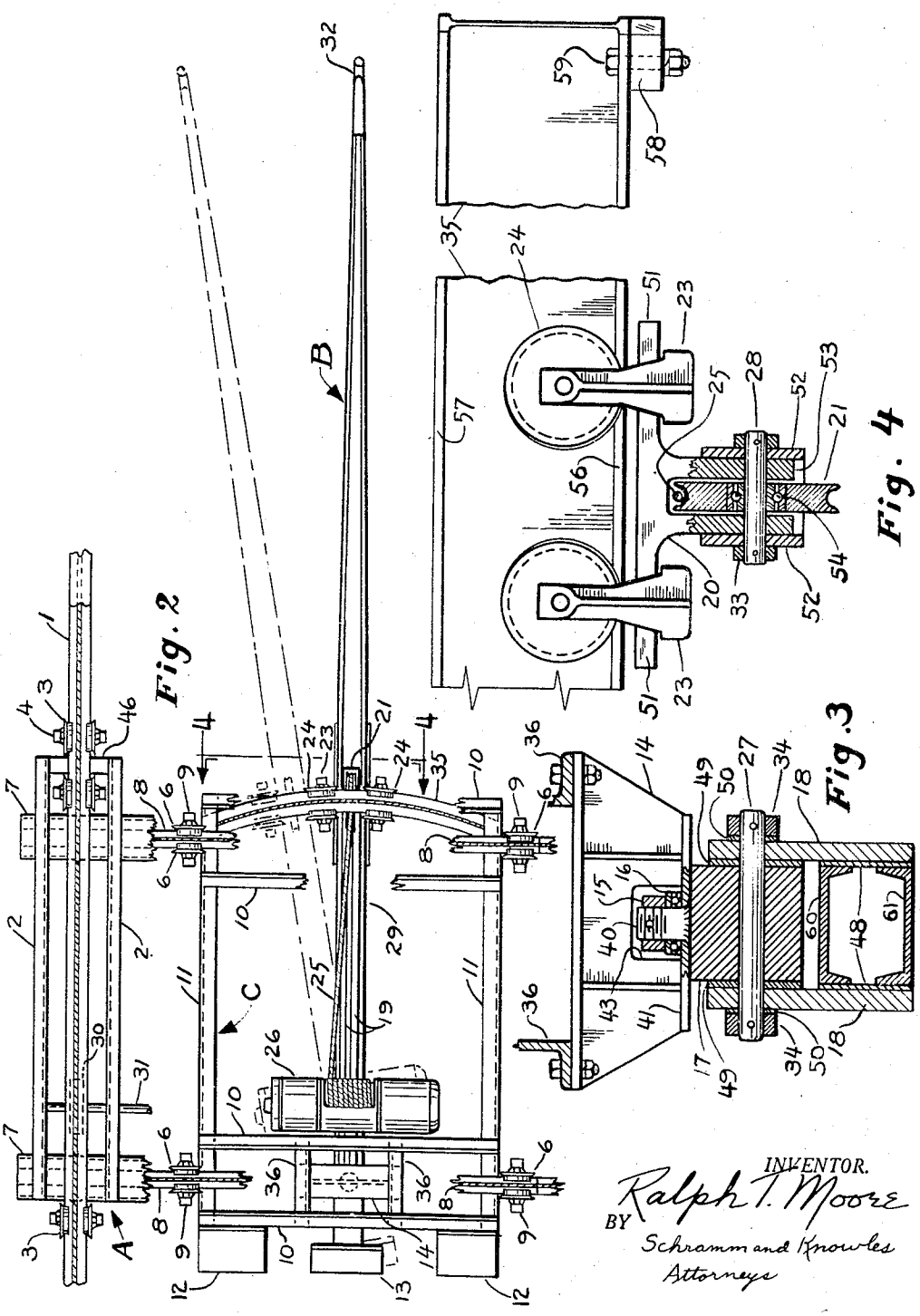

INVENTOR.
BY Ralph T. Moore
Schramm and Knowles
Attorneys

BOOM LOADER FOR OVERHEAD CRANE

Filed Feb. 7, 1955 4 Sheets-Sheet 3

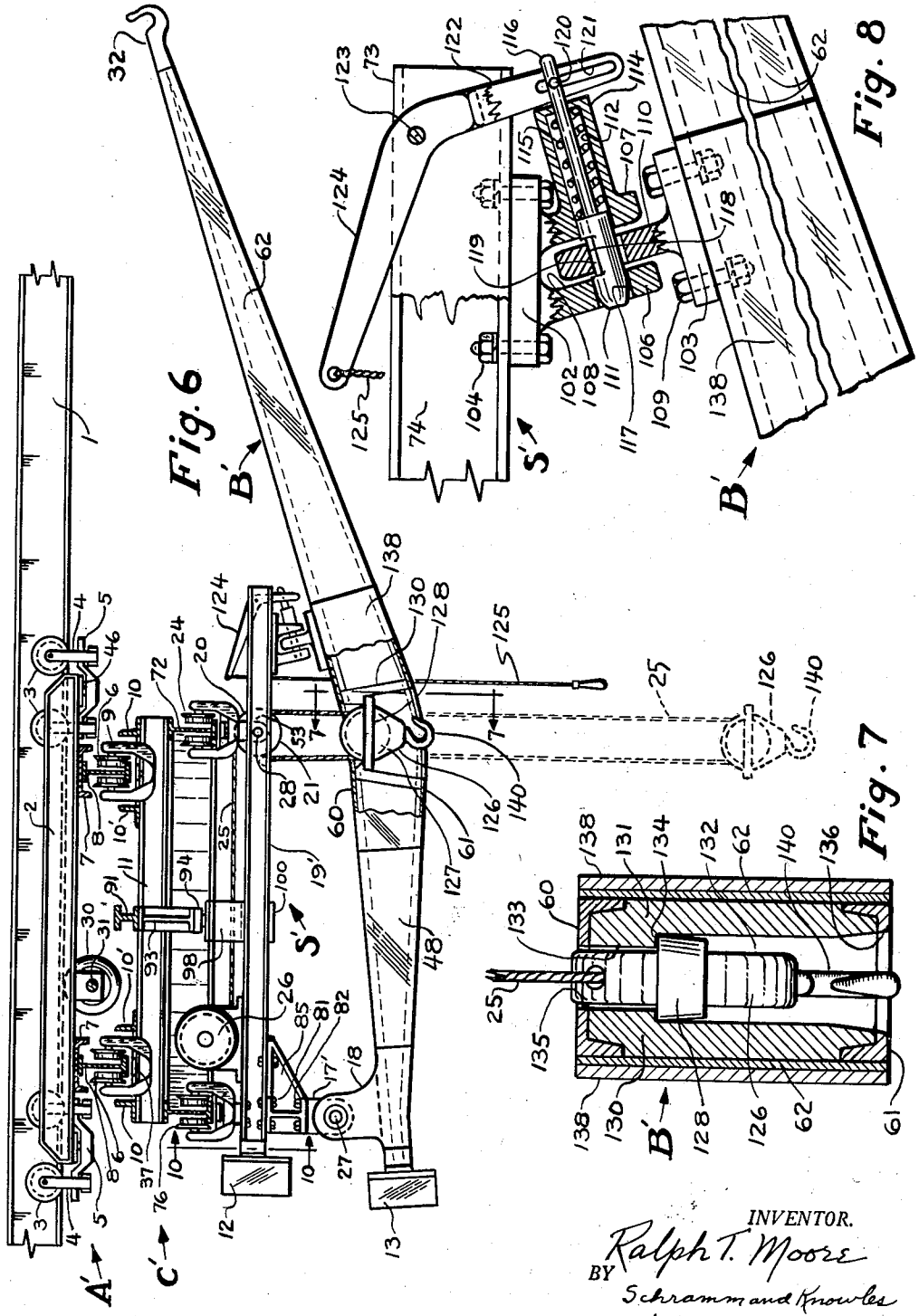

INVENTOR.
Ralph T. Moore
BY Schramm and Knowles
Attorneys

BOOM LOADER FOR OVERHEAD CRANE

Filed Feb. 7, 1955 4 Sheets-Sheet 4

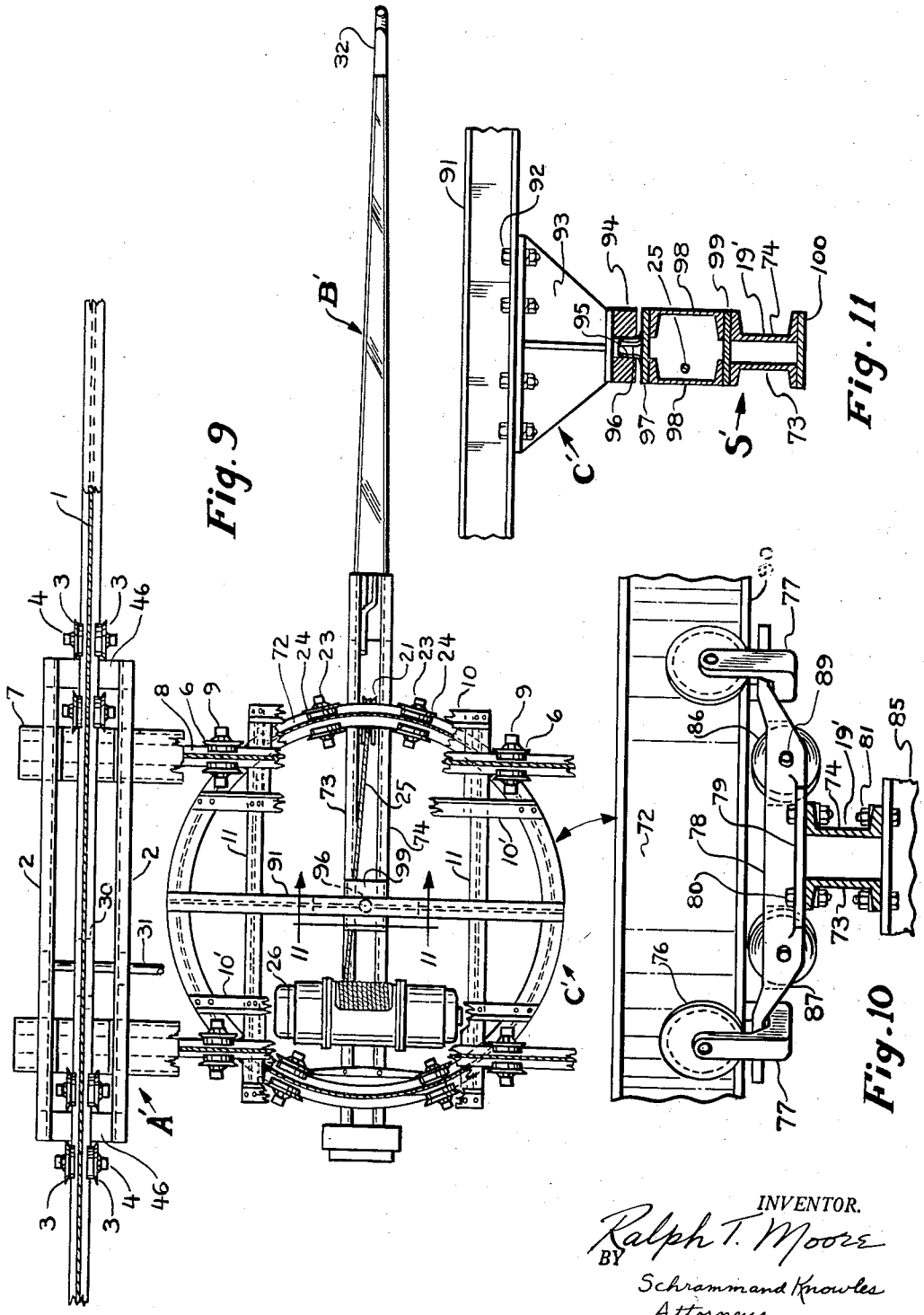

Fig. 9

Fig. 11

Fig. 10

INVENTOR.
Ralph T. Moore
BY
Schramm and Knowles
Attorneys

United States Patent Office

2,846,081

Patented Aug. 5, 1958

1

2,846,081

BOOM LOADER FOR OVERHEAD CRANE

Ralph T. Moore, Lakewood, Ohio; Vivian J. Moore, executrix of the estate of said Moore, deceased, assignor to Vivian J. Moore, Lakewood, Ohio

Application February 7, 1955, Serial No. 486,551

4 Claims. (Cl. 212—17)

This invention relates to material-handling equipment —more particularly, to overhead cranes of the type that travel along tracks for servicing a work or storage area.

One of the limitations of an overhead crane is the restriction of its effective load-handling to the area over which a truck or carriage is movable, it being necessary to locate the truck or carriage vertically above the load, in order that the hook or sling of the hoist or other lifting mechanism carried by the truck or carriage can be lowered vertically to the load and act on the latter without horizontal force components. The present invention is concerned with extending the effective work area coverage of an overhead traveling crane and with providing such a crane with a different type of load handling facility, it being the principle object of the invention to provide a low headroom crane capable of applying a vertical lifting force to a load located outside or beyond the vertical projection of the crane carriage.

Another object is to provide a crane which is capable of shifting the relative position of the load and the carriage or carrier of the crane, so that, in use, a number of loads can be serviced without moving the carrier or, if desired, the crane can be oriented in various positions relative to a single load, so as to facilitate the handling of such load.

In its broader aspects, the invention contemplates a crane having a boom mounted on a carrier or truck as by being suspended below such carrier. The boom is pivotally attached to the crane carrier, the pivotal connection constraining the boom to relative swing movements in a vertical plane. An actuator is connected between a point on the carrier and a point on the beam, each spaced from the point of pivotal connection, so as to impart lever action to the boom. In the contemplated arrangement, one end of the boom is pivoted on the carrier and the other, or load-carrying, end of the boom extends beyond the vertical projection of the carrier. In such arrangement, the actuator conveniently takes the form of a hoist connected between a point on the carrier spaced from the pivotal connection of the boom and a point on the boom intermediate the pivot and load-carrying ends, constituting the boom a third degree lever. As a specialized version of the invention, a latch mechanism comprising an element on the carrier and an element on the boom is provided for the purpose of fastening the boom in predetermined relation to the carrier, the boom preferably being in raised position when so latched, so as to relieve the hoist actuator of load with attendant safety and operating advantages. As a still further refinement of this aspect of the invention, a detachable connection is provided between the hoist and the boom so that with the boom latched in raised position, the hoist is available for conventional direct-lift load-handling operations.

As a further variation of the crane-boom arrangement referred to, and as another objective of the invention, the boom is mounted on the crane carrier for relative rotative or swiveling movement about a vertical axis, this

2

being a preferred way of accomplishing the orientation of the carrier and the load-lifting end of the boom in different relative positions. In providing for rotative movement of the boom relative to the carrier, the wheels and rails of the crane structure are relieved of horizontal force components resulting from moments caused by the eccentric loading of the crane resulting from the application of a load to the horizontally projecting boom. In the preferred arrangement, horizontal force components are carried by a specialized component of the carrier herein called a stiffener or strut member that is disposed in the vertical swing plane of the boom and is coupled to the boom to turn with the latter, this being one of the more specialized objectives of the invention.

In the operation of an overhead traveling crane equipped with a lever-type boom of the character referred to, one of the limiting factors governing the weight of the load that can be handled satisfactorily is the tendency of the crane, truck or carrier to be tilted on the tracks by reason of the application of a vertical load to the outer end of the boom. The structural arrangement of the present invention lends itself to convenient location of counter-balancing weights or loads on the carrier, strut or boom for the purpose of increasing the capacity of the boom with respect to loads applied to the boom outer end. In certain applications of the invention, it is feasible to mount heavy components, such as drive motors, on the inner, or base, end of the boom or on the strut or other part of the carrier adjacent the pivot, utilizing such components as counter-weights in augmenting the effective load-carrying capacity of the boom. A hoist for raising and lowering the boom may, for example, constitute one such counter-balancing weight. Another counter-balancing weight may be the electric drive for a mechanical grab or the like, the grab structure being on the outer or load-carrying end of the boom and the drive therefore being at or beyond the pivot end of the boom to constitute a counter-weight.

Other objects and advantages pertain to certain novel features of construction and combinations and arrangements of parts which provide a compact, relatively inexpensive crane-boom combination, simple in construction and design, inexpensive to manufacture, erect and service in the field, as will become apparent from the following detailed description of the invention made in connection with the accompanying drawings, forming a part of the specification.

In the drawings:

Fig. 1 is a fragmentary, partly diagrammatic, side elevational view, partly in section and with parts broken away and removed, of a suspended overhead crane incorporating a boom-carrier combination and embodying the principles of the present invention, this view showing in phantom the application of the device to the placement of cargo inside the covered body of a truck or van;

Fig. 2 is a plan view, partly diagrammatic, partly in section and with parts broken away and removed, of the crane structure of Fig. 1;

Fig. 3 is a fragmentary sectional detail through the boom pivot member, this view being taken substantially in the plane indicated at 3—3 of Fig. 1 and enlarged with respect to that figure;

Fig. 4 is a fragmentary elevational detail, partly in section and with parts broken away and removed, showing the boom trolley, this view being taken substantially in the plane indicated at 4—4 of Fig. 2 and enlarged with respect to that figure;

Fig. 5 is a fragmentary elevational detail, partly in section and with parts broken away and removed, showing the trolley wheel suspension by which the carrier is mounted on the traveling bridge;

Fig. 6 is a fragmentary side elevational view, partly

in section and with parts broken away and removed, showing a modification of the invention, incorporating 360° rotative movement of the boom on and relative to the carrier, this view being otherwise similar to Fig. 1.

Fig. 7 is a fragmentary sectional detail through the boom to show the separable connection between the hoist and the boom, this view being taken substantially in the plane indicated at **7—7** of Fig. 6 and enlarged with respect to that figure;

Fig. 8 is a fragmentary elevational view, partly in section and with parts broken away and removed, showing the latch structure for interconnecting the boom and the carrier strut;

Fig. 9 is a fragmentary plan view, partly in section and with parts broken away and removed, of the boom-crane combination of Fig. 6;

Fig. 10 is a fragmentary elevational detail, partly in section and with parts removed, showing one of the strut suspending trolleys of the embodiment of Figs. 6 and 9, this view being taken substantially in the plane indicated at **10—10** of Fig. 6 and enlarged with respect to that figure; and

Fig. 11 is a fragmentary elevational detail, partly in section and with parts broken away and removed, showing the vertical pivot guiding the rotation of the boom structure in the embodiment of Figs. 6 and 9, this view being taken substantially in the plane **11—11** of Fig. 9 and enlarged with respect to that figure.

Traveling cranes, particularly cranes of the low headroom type, are designed for suspension from one or more horizontal rails or tracks that are suitably secured to the structure of the building in which the crane is installed or on suitable stanchions or uprights erected for the purpose. The crane rails may consist of short, straight runs or they may comprise a vertical network, interconnecting and interlocking in such a way as to permit a crane bearing a load to travel from one point to any of a number of destinations within a plant, shop or yard serviced by the crane system. In many instances, however, it is not feasible to construct overhead rails that will enable a crane to move into every part of the establishment in which it is installed and, of course, it is virtually impossible to extend the rails of an overhead crane system into the interior of a box car, truck or van to be loaded. The boom-crane combination of the present invention is provided to extend the load lifting ability of the overhead crane beyond the vertical projection of the crane bridge and carrier so as to cover areas which are beyond or outside the reach of the crane rails. While the invention is applicable to overhead cranes of the type that travel on single tracks, it is most practical and useful in connection with traveling overhead cranes of the double bridge type that are mounted on spaced parallel tracks, the boom being suspended from a carrier that travels back and forth on the bridge transversely to the direction of travel of the bridge structure along the rails, such a structural arrangement representing the best known mode of practicing the invention.

Referring now to the drawings, one of the rolled steel I-section runway rails for supporting the double bridge crane is indicated at **1**, it being understood that a similar rail is provided at the other end of bridge A, both rails being suitably secured to the building or other supporting structure so that the rails are parallel to one another, all in accordance with conventional practice in erecting overhead crane rails. At the opposite ends of the bridge A and arranged to travel along the rails are trucks. Only one truck is shown in the drawings, the other being the same, comprising a pair of spaced parallel steel channel frame members **2** that are located one on each side of the vertical plane of the rail with which it is associated. These frame members extend between and connect the ends of the main bridge caps or channel members **7**, to which they are rigidly secured as by bolting, riveting or welding. The bridge structure thus comprises a rectangular frame which is suspended from the runway rails by trolley wheels **3**. These trolley wheels may comprise single pairs, as shown at the left in Figs. 1 and 2, or double pairs, as shown at the right in these figures. The trolley wheel pairs are each carried by stub shafts fast in a yoke **4**. In the case of the single pair of trolley wheels (at the left in Figs. 1 and 2) the yoke receives a rigid element projecting from the bridge frame and thus carries the load directly. In the case of the double pair of trolleys (at the right in Figs. 1 and 2) the yokes **4** are connected as by a load bar **5** which receives a transverse element **46** (Fig. 2) secured between the overhanging ends of the truck frame members **2**. In the arrangement shown the double pairs of trolleys are employed at the right-hand side of the bridge frame to carry the relatively greater load imposed on such side of the bridge by reason of the eccentric loading resulting from the boom structure, as will appear. Thus the overhanging or projecting arrangement of the truck members **2** with respect to one of the main bridge members **7** obtains certain advantages such as increased stability and load carrying capacity. It is apparent that it is feasible to use single trolley pairs at each side of the truck or, if desired, the double pairs of trolleys may be used at both sides, as will appear. Movement of the crane bridge to and fro along the runway rails **1** is accomplished conventionally as by rubber-tired drive wheels one of which is indicated at **30** actuated by a drive shaft **31** and a suitable motor (not shown). The drive wheels frictionally engage the underside of the bottom flanges of the runway rails **1** and the drive motor is energized through conventional controls.

Suspended beneath the traveling double bridge for movement along the latter transversely to the direction of movement of the bridge along the rail or rails **1** is a carrier C that also is of rectangular frame construction and has trolley wheels **6** in pairs that ride along the bottom flanges of I-beam rails **8** secured to the underside of the main bridge cap members **7**. In the arrangement illustrated the bridge members **7** may comprise rolled steel channels disposed and spaced in parallel relation with their channels opening downwardly. The carrier rails **8** are then disposed with their upper flanges against the web portions of the channel members **7** and secured by the usual welding, riveting or bolting.

The carrier frame comprises pairs of spaced parallel truck members **10**, one pair associated with each of the carrier rails **8**, and spaced parallel transverse members **11** which extend across and are rigidly connected to the ends of all of the truck members. The wheels **6** are carried on stub shafts as are the bridge wheels **3**, the stub shafts of the carrier wheels being held in yokes **9** that receive the stems of load carrying elements **37** (Fig. 5) disposed between the carrier frame members **10** and **11** and held in place as by bolts **38** which extend through the members and elements. The load carrying elements **37** are each T-shaped in plan form, the head of the T being clamped between or held fast to the frame members of the carrier, and the stem of the T extending into the saddle of the yoke and resting on a locating and centering element **39** supported as by a suitable anti-friction bearing.

While the cross-sectional shapes of the various bridge frame and carrier frame members may vary, these parts are made of conventional rolled steel sections suitably selected as to size and shape to carry the loads for which the particular crane system is designed, all in accordance with customary crane design practice.

Mounted on the carrier C, preferably in suspended relation below the bridge structure and also below the carrier, is a boom B which is arranged so that its forward or load carrying end (at the right in Figs. 1 and 2) extends laterally beyond the vertical projection of the carrier and thereby increases the area over which the load carrying ability of the crane is effective. The suspension of

the boom incorporates a rotative swivel arrangement which permits side to side swaying of the boom in addition to its up and down or load lifting movement. The up and down swinging of the boom and also the swiveling or rotating of the boom relative to the carrier are accommodated in pivots associated with block **17** disposed at the inner or base end of the boom. This block, comprising a steel forging or machining capable of withstanding strong shearing, twisting and bending forces, includes an integral vertical or upstanding pin portion **40** which is received through a central opening in lower flange **41** of a supporting or I-beam **14** secured to short supplemental frame members **36** that are connected in spaced parallel relation to one another between one of the pairs of carrier truck members **10** (Fig. 2). The web of the pivot beam **14** is suitably reinforced as by gusset plates **42** and is formed with a cutout **43** adjacent the lower flange **41**, this cutout accommodating the pivot pin **40** and a nut **15** screwed onto the threaded upper end of the pivot pin. A thrust assembly **16** is interposed between the nut and the flange of the beam. A transverse pin through the nut **15** and the pivot pin **40** prevents turning of the nut on the pin.

The pivot block **17** constitutes a support or anchorage on the carrier C for the left-hand end (as viewed in Fig. 1) of both a strut assembly S and the boom B. The strut assembly comprises a pair of rolled steel channels **19** disposed in parallel relation to one another with their open channels facing. At their ends the flanges of the strut channels are removed, leaving web portions which at the pivot end of the strut are indicated at **49** and are received on opposite sides of the pivot block **17**. Against the outside surfaces of the struts are received hinge plates **18**, these hinge plates being located one on each side of the pivot block. A pin **27** is received through aligned holes in the hinge plates, strut web ends **49** and the pivot block **17** so as hingedly to fasten the strut S and the hinge plates to the pivot block. Suitable retainers **34** are received on the projecting ends of the pin **27**, held as by transverse pins. Washers **50** are desirably interposed between the retainers **34** and the surfaces of the hinge plates **18** so that the hinge plates can turn freely on the pins in the up and down swinging movement of the boom.

At its forward or right-hand end (Fig. 1), the strut assembly S is suspended from load bar **20** (Fig. 4) of a trolley comprising two pairs of wheels **24** and yokes **23** that supportingly receive oppositely directed horizontal end portions **51** of the load bar **20**. Forward web portions **52** of the strut channel member **19** are disposed one on each side of and in embracing relation to a depending bifurcated end **53** of the T-shaped load bar **20**. A transverse pin **28** is received through aligned holes in the strut channel webs **52**, the bifurcated load bar body **53** and a sheave **21** that is located in the space between the depending leg portions of the latter. Suitable pin-held retainers **33** on the projecting ends of the main pin **28** hold the latter in place, and a suitable ball or other anti-friction assembly **54** is used in the mounting of the sheave **21** on the center of the pin **28** so that the sheave turns freely during the paying out and drawing in movements of the boom hoist cable **25**, as will appear.

The boom trolley wheel pairs **24** ride along the lower flanges **56** of an arcuately curved track member **35** secured to the underside of the rolled steel L-sectioned members **10** comprising one of the trucks of the carrier. The track **35** may comprise a rolled steel I-beam providing top flanges **57** which are bolted or otherwise secured to and against the underside of the truck members **10**, and track flanges **56** that carry the trolley wheels **24**. The curvature of the track **35** corresponds to that of an arc of a circle having its center on the axis of the pin **40** of the pivot block **17** so that the trolley wheels **24** ride smoothly along the track flanges **56** during rotative or side to side horizontally swinging movement of the strut assembly S and the boom B as an integrated unit and as between the broken and full line positions of Fig. 2. At the ends of the track stop blocks **58** are secured as by bolts **59** against the undersides of the flanges **56** to engage the boom trolley and limit the turning movement of the boom and strut assembly about its vertical axis.

The boom B is of box construction, being fabricated from rolled steel members and plates. In the arrangement shown, top and bottom channels **60** and **61** are disposed in confronting relation to one another and are secured together by a series of side plates **62** riveted to the flanges of the channel members. The base or left-hand end of the boom (as viewed in Fig. 1) is received between the depending portions of the hinge plates **18** to which the members of the boom are secured as by riveting and welding. At its forward or right-hand end (as viewed in the same figure) the boom is fitted with a conventional hook **32** for carrying a load **64** as by means of a sling **65**. Desirably the boom is tapered, having its maximum section at a lifting point spaced from the base end of the boom a distance corresponding to the length of the strut member S, so that in the raised position of the boom, shown by the full lines of Fig. 1, a sheave **22** carried by a pin **66** held at the lift point of the boom is directly below and in the plane of the sheave **21** carried by the load bar **20**. A cable **25** running from electric hoist **26** fast on the strut channels **19** adjacent the pivot block **17** at the base end of the strut assembly is trained over the sheave **21**, thence downwardly and under the boom sheave **22** and thence upwardly to the strut S, the end of the hoist cable being fast to the strut adjacent the sheave **21**. In addition to having its maximum section at or adjacent the lift point of the sheave pin **66**, the boom is formed with a bend at such section so that in raised position the forward portion of the boom between the lift point and the hook **32** extends upwardly at an acute angle to the horizontal, the hook being thus movable to a point above the level of the base of the boom and above the strut S. Although a hook **32** of elementary type is shown, it is apparent that the end of the boom may be equipped with any of various load handling devices such as a grab, forks, or turning and stacking implements. In the event such load handling devices require power operation, it is feasible to rig them with driving components extending through the hollow interior of the boom, a suitable drive motor or actuator being located on a rearward extension **68** of the boom in lieu of counterbalance or weight **13**.

In the proportioning of the different parts of the boom, regard must be had to the weight and character of load that is to be handled. Since the load **64** applies a downward force on the outer end of the boom, the reaction of the load pin **66** on the hoist cable **25** is likewise downwardly and the pin **27** at the base end of the boom reacts upwardly against the pivot block **17**. Thus the boom constitutes a third degree lever and the load carrying capacity of the boom is limited by the strength of the boom in resisting bending moments, by the tensile strength of the hoist cable **25**, and by the strength of the carrier C and bridge A components on the right of the crane structure (as viewed in Figs. 1 and 2). The upward reaction against the pivot block **17** resulting from a load on the boom hook **32** tends to raise the carrier trolley wheels **6** at the left side of the carrier (as viewed in Figs. 1 and 2) off the track **8**. Under extremely heavy loads it is apparent that an upward reaction might result against the left side of the bridge (as viewed in Figs. 1 and 2), tending also to raise the bridge trolley wheels **3** off the runway rails **1**.

As a stabilizer for the boom, to counterbalance the weight of the projecting outer portion of the boom and any load carried by the hook **32**, the weight **13** is mounted at the base end of the boom, this weight comprising a concrete or metal block or, as previously mentioned, a

drive motor for a mechanical grab or other device utilized in lieu of the hook **32**. To further counterbalance the boom and any load carried thereby, a weight **12** is mounted on the left side of the carrier (as viewed in Fig. 1). This weight also may comprise a block of metal or concrete or a sutable drive and controls for shifting the carrier C back and forth across the bridge rails **8**. In addition to or in lieu of the weights **12** and **13**, or one of them, the carrier suspension may incorporate rollers (not shown) mounted as on the load carrying elements **37** to engage against and ride along the underside or sides of the bottom flanges of the left-hand track **8**, such rollers serving to prevent raising of the trolley wheels **6** off the track flanges. Other rollers (not shown) can be incorporated in the trolley structure of the bridge A to prevent raising of the rollers **3** off the track flanges of the runway rails **1**.

The length of the forward portion of the boom B between the lift pin **66** and the load hook **32** is determined by the permissible reactions on the load pins of the strut-boom assembly, upward on the pin **27** and downward on the pin **28**. The longer the forward portion of a boom, the greater the reactions against these pins for a given load. In the arrangement shown the distance between the load pin **66** and the hook **32** is approximately twice the distance between such pin and the pivot pin **27** so that, in accordance with well known principles, the load that can be accommodated on the hook is one-third the lifting capacity of the hoist **26**. Thus a hoist capable of exerting a 3,000-pound lifting force on the pin **66** is capable of lifting a load **64** of approximately 1,000 pounds suspended from the hook **32**, less the dead load of the beam. A geometrical arrangement proportioned and arranged as shown is suitable for use in many material handling situations, particularly in the placement of crated items and the like into the covered body of a van or trailer **70**, indicated in phantom in Fig. 1.

In the operation of the boom-crane as in loading the van **70** the boom **29** swings up and down as between the broken and full lines shown in Fig. 1, this movement being in a vertical plane normal to the axis of the horizontal pivot pin **27** and being common to both the boom and the strut assembly **19**. When the boom is lowered to the broken line position shown the sheave **22** is displaced horizontally and the forces in the fixed and movable runs of the hoist cable **25** include horizontal components that react against the pin **28** in the load bar **20** of the boom trolley. The presence of the strut member S, however, and its connection to and between the main pivot pin **27** and the forward trolley pin **28** relieve the boom trolley and the carrier structure of the horizontal force components resulting from the boom load. Since the strut member S and the boom B are received at their base ends on a common horizontal pin **27** and at the forward end of the strut assembly the boom is suspended from the pin **28** by the hoist cable, the strut and boom are constrained to horizontal movement in unison. Thus at all times they are disposed in a common vertical plane. Such side to side movement of the boom and strut with the boom trolley wheels **24** traveling along the arcuate track **35** is effected manually or through cable and pulleys actuated by suitable electric drive means (not shown). Such a drive may be carried by either the strut assembly or the carrier frame members **11** and conventionally controlled.

Lateral stability is imparted to the boom B through the rigidly attached hinge plates **18** that embrace the pivot block **17**, the latter in turn being rotatable on its vertical axis and held against turning on a horizontal axis by the flatwise engagement of the top of the block against the underside of the bottom flange **41** of the support beam **14**. The pivot or hinge block **17** is drawn and held snugly against the bottom flange of the beam by the nut **15** acting against the thrust bearing assembly **16**. Thus the pivot or hinge block **17** and associated components, while permitting up and down swinging of the boom in a vertical plane and side to side rotative turning as a unit of the strut-boom combination about a vertical axis through the pin **40**, prevents lateral twisting of both the strut and the boom.

In Figs. 6–11 is illustrated a modification of the invention in which parts corresponding to those described in connection with the preceding figures are indicated by the same reference numerals and similar or corresponding parts are indicated by the same numerals primed. In this modification a boom **29'** is capable of continuous or 360° rotative movement about its vertical axis, instead of the limited arcuate side to side swinging movement of the corresponding boom **29** previously described. The truck frame members **2** of the crane bridge A' overhang or extend beyond both of the bridge cap members **7** in cantilever fashion and at their ends are supported on trolley assemblies corresponding to the double trolley wheel pairs described in connection with the suspension of the forward or right-hand side of the bridge crane of Figs. 1 and 2. The carrier structure C', comprising a rectangular frame having the truck members **10** and cross members **11**, as previously described, is suspended by the trolley wheels **6** from the bridge rails **8**.

In the full swiveling modification of Figs. 6–11 the boom-strut unit is suspended wholly by fore and aft trolleys that ride on the lower flanges of a circular track **72**. This track is formed of a rolled steel I-beam bent into circular form and its ends joined as by welding to form a complete annulus having the desired diameter, here shown as being greater than the distance between the rails **8** of the bridge A. The circular track **72** is secured to the underside of the carrier as by bolting its upper flanges to and against the undersides of the carrier members **10** and **11**. Certain of the carrier truck members, indicated at **10'**, are extended beyond the cross frame members **11** so as to provide additional support for the circular track to which they are connected through spacers (not shown).

The strut S' of the embodiment of Figs. 6–11 is of modified construction and comprises a pair of rolled steel channels **73** and **74** disposed in spaced parallel relation, with the openings in the channels facing outwardly. The forward or right-hand end of the strut is suspened by a pair of double wheel trolleys and related parts as described in connection with the embodiment of Figs. 1 and 2. Instead of being pinned to the extreme end of the strut as in the arrangement of Figs. 1 and 2, the bifurcated end **53** of the load bar **20** is received and held by the pin **28** between the strut channels **73** and **74** at a point spaced from the forward end of the strut to provide an overhang cantilever end on the latter, which carries a latching mechanism for locking the boom in raised position, as will later appear.

The rear or left-hand end of the strut S' is suspended from the track **72** by a trolley assembly shown in Fig. 10. The trolley wheels **76**, in pairs, turn on aligned stub shafts fast in the upper ends of the arms of yokes **77**. A load bar **78** formed with a depressed or underslung central portion and raised ends is carried between the yokes, the raised ends of the load bar being received within the yokes and located and held in place on suitable bearing elements. The load bar is formed with one or more lateral flanges **79** along the bottom edge or edges of its underslung central portion, these flanges being bolted as at **80** to the upper flanges of the channels **73** and **74** comprising the strut S'.

A pivot or hinge block **17'** corresponding to the block **17** previously described is disposed between the spaced hinge plates **18** of the boom and carries the hinge pin **27** which constitutes one of the points of connection between the boom and the carrier and on which the boom is suspended and swings in a vertical plane. The block **17'** is connected rigidly to the rear or base end of the strut S'

either directly or, as shown, by means of an interposed bracket 85 fabricated from a short piece of rolled steel I-beam section and plates. Bolts and screws **81** and **82** or other suitable fasteners secure the number **85** to and against the bottom of the strut S′ and to and against the top of the pivot block **17′** respectively. By reason of the rigid connection thus established between the pivot block **17′** and the strut S′ the boom B′ is constrained to swinging movement in the plane of the strut S′.

Rollers **86** are recessed in wells **87** formed in the load bar **78** and turn on pins or spindles **89** held at their ends in the load bar. These rollers are disposed to engage against underside **90** of the bottom flange of the circular track **72** to transmit to the track any upward force applied by the base of the boom through the pivot pin **27** resulting say, from heavy or excessive loading of the hook or grab **32**. Similar rollers may be provided in the load carrying elements **37** or elsewhere on the carrier to transmit any upward forces from the carrier C′ to the bottoms of the tracks **8** of the crane bridge A′.

As an optional feature of construction and as one of the advantages and objectives of the invention, means is provided for guiding or centering the rotation of the strut-boom combination on the carrier C′ to relieve the trolleys associated with the wheels **24** and **75** of horizontal loads. A central frame member **91** is supported on and secured to the cross frame members **11** of the carrier, this frame member being midway between and parallel to the truck members **10′**. The ends of the central frame member, which member may comprise a rolled steel I-beam, project cantilever fashion beyond the cross frame members **11** and are fastened to diametrically opposite points of the circular track **72** through interposed spacers. Thus the central frame member provides support for the circular track in addition to that obtained through the truck frame and cross frame members of the carrier. At its center or mid-point, which is also the center of the carrier, the frame member **91** has secured against its underside as by bolts **92** a bracket **93** on the bottom of which is mounted a tough wear resistant metal pivot block **94**. A central recess **95** in this block receives for free turning movement an upstanding pin **96** carried on a plate **97** welded or otherwise secured to channel shaped spacers **98** that are fast to the top flanges of the strut channels **73** and **74**. A plate **99** is interposed and secured between the strut members and the spacers **98**, and another reinforcement plate **100** is welded to the bottom of the strut members. Rotation of the strut-boom unit relative to the carrier is centered on the axis of the pin **96**. Horizontal forces between the boom and the carrier are thus transmitted through the pin **96**, thereby relieving the circular track **72** and the trolley wheels associated therewith from such loads.

On the cantilevered forward end of the strut S′ is carried a latch element **102** that is arranged to effect interlocking connection with a mating latch element **103** secured to the boom B′ for the purpose of holding and supporting the forward or load carrying end of the boom in raised position, as shown in Fig. 6. The latch element **102** is a tough steel forging or casting having a rectangular base secured to the flanges of the strut members **73** and **74** as by bolts **104**. Depending or projecting downwardly from the base of the latch element is an integral bifurcated structure comprising arms **106** and **107** defining between them a latch socket or recess **108**. The latch element **103** also comprises a tough metal forging or casting having a rectangular base secured as by bolts **109** to the top of the boom B′. An integral leg or prong **110** projects upwardly from the base of the element **103**, the parts of the two latch elements being so oriented that when the boom is raised the prong **110** moves into the latch recess **108** of the latch element on the strut in position to be held by a retractable pin **111** guided in a bore **112** formed in a lateral boss extension **114** of the arm **107**. A helical coil spring **115** is received about a reduced diameter stem portion **116** of the pin **111** and within the recess **112**. The spring reacts against the shoulder of the pin and the circular wall at the inner end of the bore **112**, biasing the pin to the left (as viewed in Fig. 8) for movement across the latch recess **108** and into an aligned socket **117** in the latch arm **106** so that in its projected position shown the pin **111** is supported at both ends by the arms **106** and **107**.

When the boom B′ is in the raised position shown in Figs. 6 and 8 and the pin **111** is projected across the latch recess **108** it is received through an opening **118** in the prong **110** to effect an interlock between the elements or components of the latch mechanism and thereby hold the boom in raised position. The central portion of the pin **111** may be formed with a depressed saddle **119** providing axially spaced shoulders engageable against opposite sides of the prong **110** to prevent endwise shifting of the pin when loaded by the weight of the boom.

The end of the reduced diameter stem **116** projects through an axial guide hole in the end of the boss extension **114** and carries a transverse pin **120** the ends of which are received in parallel slots **121** in the spaced portions of a bifurcated arm **122** of a bell crank lever. This lever is carried on a pin **123** supported between the strut channel members **73** and **74**. A pull cord **125** is connected to the other arm **124** of the bell crank lever for actuating the latch mechanism to retract the pin **111** into the bore **112** and thereby release the prong **110** so that the boom is free to move up and down as actuated by the hoist. When it is desired to release the latch from the locked position shown, the hoist **26** is first energized sufficiently to relieve the pin **111** of load so that it may be readily withdrawn by actuation of the bell crank lever through the cord **125**.

Latching the boom to the strut in the manner described relieves the hoist cable **25** of load and permits the electric drive motor of the hoist **26** to be de-energized. Thus the latch arrangement constitutes a safety measure which prevents inadvertent lowering of the boom.

Figs. 6–11 illustrate a further variation and combination of parts that has advantages in situations requiring occasional lifting of loads heavier than can be accommodated conveniently on the hook or grab **32**. This arrangement uses, in lieu of the fixed sheave **22** described in connection with Figs. 1 and 2, a separable block **126** that carries a sheave **127** about which the hoist cable **25** is reeved. The block **126** is formed with or carries across its sides and ends a load receiving element or elements **128** which may collectively take the form of an annulus that closely embraces the casing of the block, being either integral therewith or rigidly secured thereto as by welding. In the normal operation of the crane-boom loader combination the block **126** is disposed within the box structure of the boom at the lift point which is also the intersection of the base portion and the forwardly extending load carrying portion that are angularly disposed relative to each other. A pair of bearing members **130** and **131** are arranged inside the boom, being suitably secured to the insides of the top and bottom boom channel members **60** and **61** and the side plates **62**. The members **130** and **131** may comprise steel castings or forgings and define between them a guideway **132** that accommodates the block **126**. Supplemental plates **138** secured against the sides of the boom at the lift point reinforce the angle joint between the base and forward boom portions. The upper portion of the guideway, indicated at **133**, is of reduced section in the provision of one or more shoulders **134** engageable with the load elements **128** on the block **126** so as to locate the block in the guideway in boom lifting position and prevent movement of the block upwardly through the guideway portion **133** of reduced section. An opening **135** is formed in the top boom channel member **60** in alignment with the guideway portion **133** to accommodate the upper end of the block and the vertical runs

of the hoist cable **25**. A larger opening **136** is formed in the bottom boom channel **61** to permit the block **126** to be dropped out of the guideway and lowered away from the boom when the latter is latched in raised position, as indicated by the broken lines of Fig. 6. When the block is thus released from the boom it can be used in the usual manner for directly lifting and moving loads, a suitable hook or grab **140** being fast on the block for such purpose.

The present invention thus provides a crane hoist-boom loader combination in which a lever type boom is suspended wholly below the carrier of an overhead crane in the provision of a unique low overhead load handling apparatus that can be readily maneuvered for shifting, lifting and placing loads in narrow, low overhead locations that would otherwise be inaccessible with conventional cranes and loaders. Numerous combinations and arrangements of the structures described are feasible at the option of the builder of the crane. Provision is made for either limited horizontal swinging of the boom as in the arrangement of Figs. 1 and 2 or for complete 360° swiveling if such is desired, as in the arrangement of Figs. 6 and 9.

In accordance with the patent statutes the principles of the present invention may be utilized in various ways, numerous modifications and alterations being contemplated, substitution of parts and changes in construction being resorted to as desired, it being understood that the embodiments shown in the drawings and described above are given merely for purposes of explanation and illustration without intending to limit the scope of the claims to the specific details disclosed.

What I claim and desire to secure by Letters Patent of the United States is:

1. A low overhead traveling crane comprising a carriage adapted to travel along a rail and a cantilever boom disposed below and suspended from the carriage, the boom suspension comprising a full circle track below the carriage, trolley trucks mounted on the track in diametric positions, means connecting the trolley trucks for movement about the track in unison, a horizontal pivot pin connecting one point of the boom to one of the trucks for swinging movement solely about a horizontal axis, and a hoist connecting another point of the boom to another of the trucks.

2. In an overhead crane of the type comprising rail means supported in a generally horizontal plane above an area to be serviced by the crane and a carriage mounted on the rail means for movement in said plane, the combination of a carrier, means securing the carrier to the carriage for relative rotative movement about a vertical axis, an elongated rigid cantilever boom, means suspending the boom from the carrier, the boom suspension means including pivot means connected between the carrier and one end of the boom and hoist means connected between points of the carrier and the boom spaced horizontally from the pivot means and from the other end of the boom and constituting the latter a third degree lever, latch means comprising separable interlocking elements, one on the carrier, the other on the boom, each spaced from the pivotal axis of the boom and engageable with one another to hold the boom against swinging and thereby locked in fixed relation to the carrier, the hoist including a block, separable connection means between the block and the boom at said point of the latter intermediate its ends, the separable connection means between the block and the boom comprising elements having complemental shoulders engageable with one another to connect the block operatively to the boom for raising the latter and permitting the block to drop by gravity away from the boom when the latter is latched to the carrier for use of the block in direct lift hoisting operations independently of the boom, the complemental shoulders of the connecting elements effecting automatic reconnection of the block to the boom upon raising of the block to a predetermined position relative to the boom for immediate use of the block in actuating the boom in hoisting operations.

3. An overhead crane comprising in combination a pair of runway rails adapted to be supported in spaced parallel relation above an area to be serviced by the crane, a main bridge structure adapted to be mounted on and to travel horizontally along said pair of runway rails, a carriage structure adapted to be mounted on the main bridge structure for horizontal movement therealong in a direction generally transverse to the horizontal travel direction of the main bridge structure on the runway rails, a carrier comprising a rigid horizontal strut, means suspending the carrier from the carriage structure, the carrier suspension means including means providing rotative movement of the carrier relative to the carriage structure about a vertical axis, an elongated rigid cantilever boom, means suspending the boom from the carrier, the boom suspension means including pivot means connected between the carrier and one end of the boom and hoist means connected between points of the carrier and the boom spaced horizontally from the pivot means and from the other end of the boom and constituting the latter a third degree lever, the pivot means constraining the boom to swinging movement solely in a vertical plane relative to the horizontal strut of the carrier, latch means comprising separable interlocking elements, one on the carrier, the other on the boom, each spaced from the pivotal axis of the boom and engageable with one another to hold the boom against swinging and thereby locked in fixed relation to the carrier, the hoist including a block, separable connection means between the block and the boom at said point of the latter intermediate its ends, the separable connection means between the block and the boom comprising elements having complemental shoulders engageable with one another to connect the block operatively to the boom for raising the latter and permitting the block to drop by gravity away from the boom when the latter is latched to the carrier for use of the block in direct lift hoisting operations independently of the boom, the complemental shoulders of the connecting elements effecting automatic reconnection of the block to the boom upon raising of the block to a predetermined position relative to the boom for immediate use of the block in actuating the boom in hoisting operations.

4. In an overhead crane of the type comprising rail means adapted to be supported in a generally horizontal plane above an area to be serviced by the crane and a carriage frame mounted on the rail means for movement in said plane, the combination of a carrier, means suspending the carrier from the carriage, an elongated cantilever boom having an inner pivot end and an outer load carrying end, a pin joint connecting the inner end of the boom to the carrier and constraining the movement of the boom relative to the carrier to swinging in a vertical plane, a hoist connected between points of the carrier and the boom spaced horizontally from the pin joint to raise and lower the boom relative to the carrier, the boom point to which the hoist is connected being intermediate and spaced from both ends of the boom, latch means comprising separable interlocking elements, one on the carrier, the other on the boom, each spaced from the pivotal axis of the boom and engageable with one another to hold the boom against swinging and thereby locked in fixed relation to the carrier, the hoist including a block and flexible cable means running from the carrier to the block, separable connection means between the block and the boom comprising elements having complemental shoulders engageable with one another to connect the block operatively to the boom for raising the latter and permitting the block to drop away from the boom by gravity when the latter is latched to the carrier for use of the block in direct lift hoisting operations independently of the boom, the complemental shoulders of the connecting elements effecting automatic reconnec-

tion of the block to the boom upon raising of the block to a predetermined position relative to the boom for immediate use of the block in actuating the boom in boom hoisting operations, one of the connection elements being an outer element carried by the boom and having a vertical through opening receiving the cable means, and the other of the connection elements being on the block, the one element constituting a guide for the cable means in direct lift hoisting operations and in raising the block to said boom hoisting position.

References Cited in the file of this patent

UNITED STATES PATENTS

666,123	Wellman et al.	Jan. 15, 1901
734,187	Matthews	July 21, 1903
854,837	Paige	May 28, 1907
1,334,892	Dickinson	Mar. 23, 1920
1,794,714	Kiplinger	Mar. 3, 1931
1,799,209	Bennington	Apr. 7, 1931
1,818,374	Bennington	Aug. 11, 1931
2,553,378	Miller	May 15, 1951