United States Patent [19]

Musser

[11] **3,792,757**

[45] **Feb. 19, 1974**

[54] **BASKET-CART UNLOAD APPARATUS FOR SUPERMARKETS**

[76] Inventor: **Malcolm E. Musser**, P.O. Box 386, Jackson Center, Ohio 45334

[22] Filed: **May 17, 1972**

[21] Appl. No.: **253,972**

Related U.S. Application Data

[62] Division of Ser. No. 50,467, June 29, 1970, Pat. No. 3,678,660.

[52] **U.S. Cl.** ..... **186/1 AC**, 198/185

[51] **Int. Cl.** **B65g 15/44**

[58] **Field of Search**..... 186/1 AC; 198/185; 53/244, 53/390

[56] **References Cited**

UNITED STATES PATENTS

2,880,850	4/1959	Keathley et al.	198/185
3,004,651	10/1961	Manspeaker et al.	198/185
3,454,139	7/1969	Lachance et al.	186/1 AC
3,512,336	5/1970	Rosecrans	53/244 X
3,446,315	5/1969	Close	186/1 AC
2,554,624	5/1951	Lorentzen et al.	53/390 X

Primary Examiner—Richard A. Schacher
Attorney, Agent, or Firm—Jacox & Meckstroth

[57] **ABSTRACT**

Apparatus for checking out articles of merchandise in a supermarket type of operation. A checkout counter includes mechanism for unloading a basket-cart.

11 Claims, 15 Drawing Figures

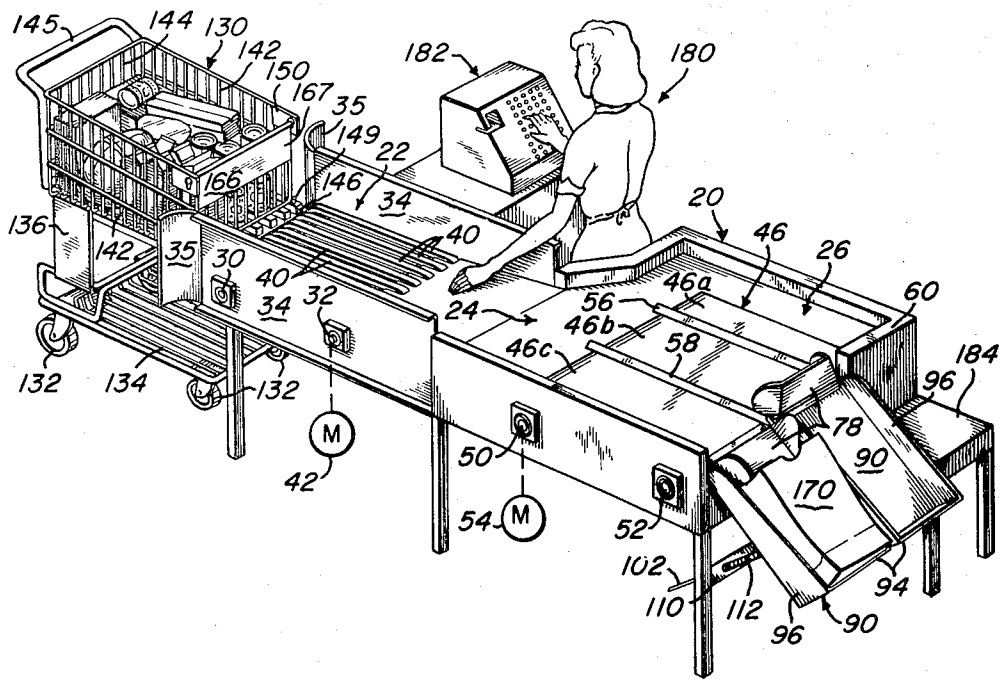

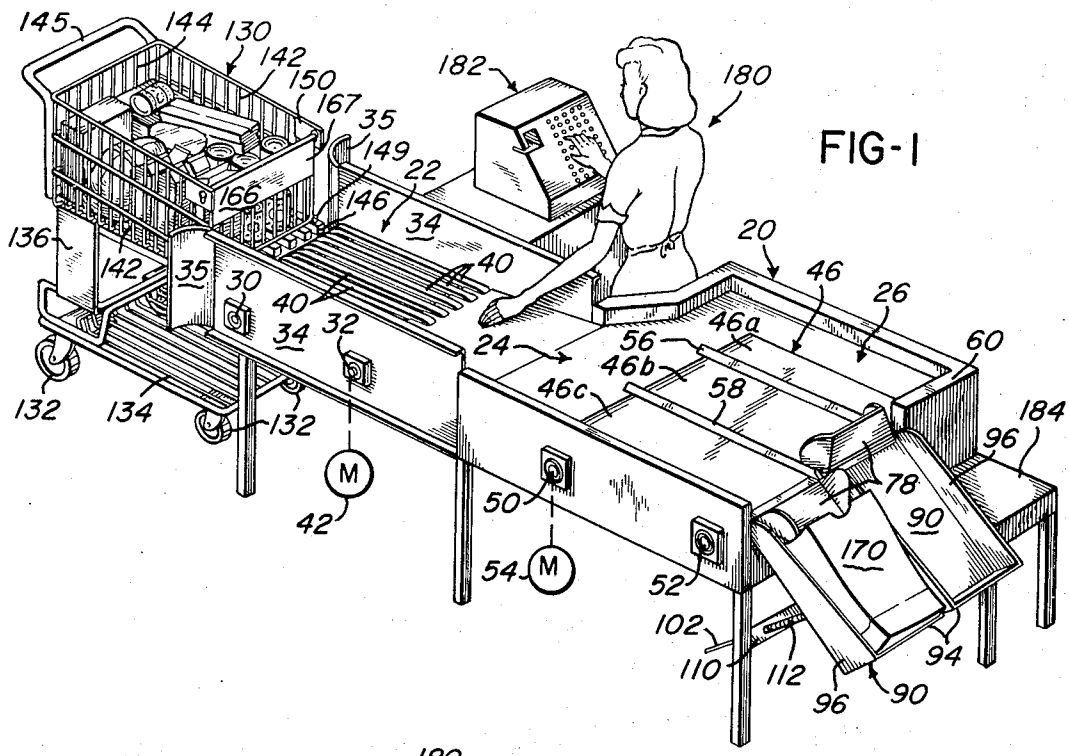

FIG-1

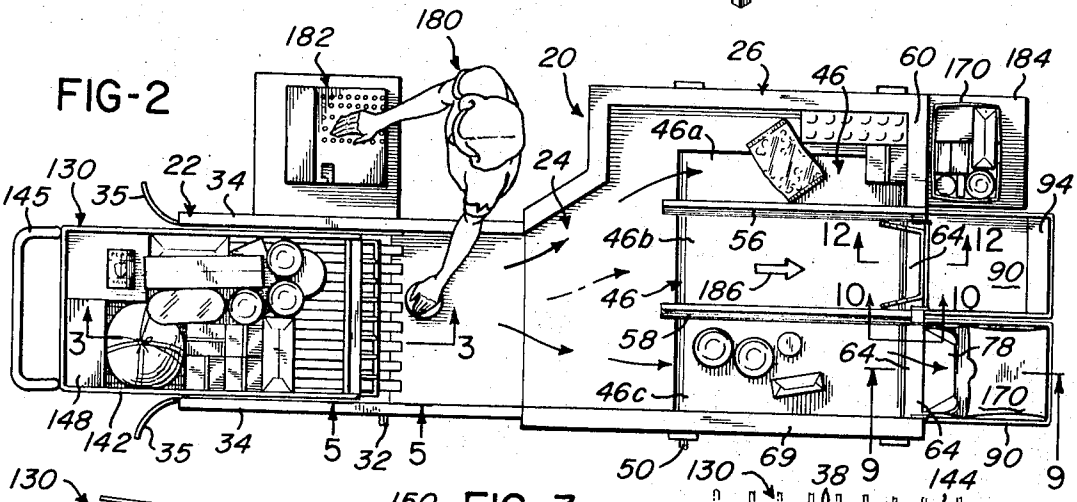

FIG-2

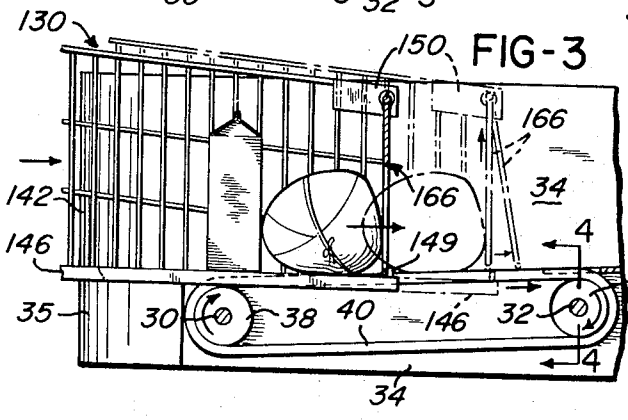

FIG-3

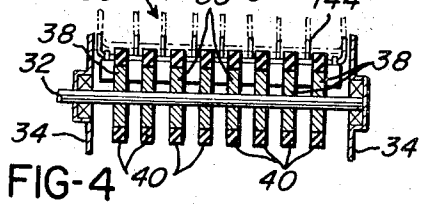

FIG-4

FIG-5

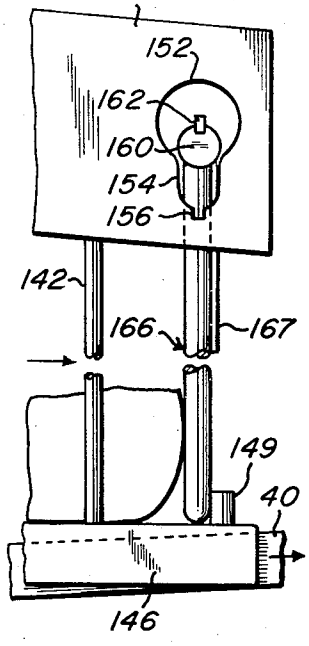

FIG-6

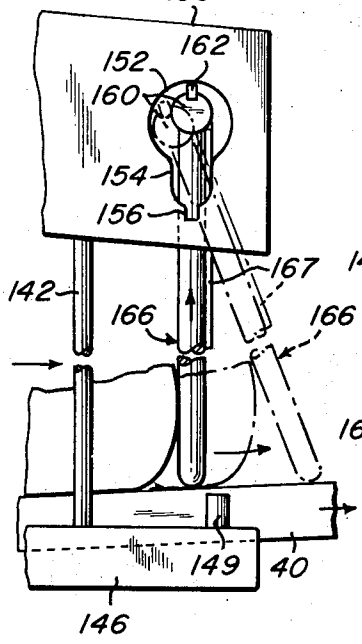

FIG-7

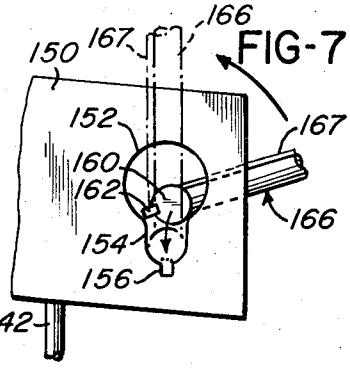

FIG-8

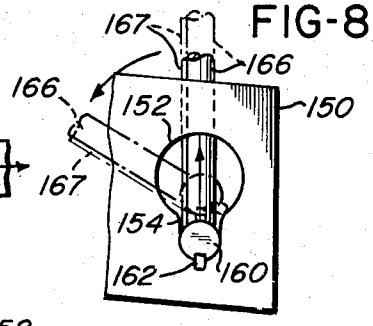

FIG-9

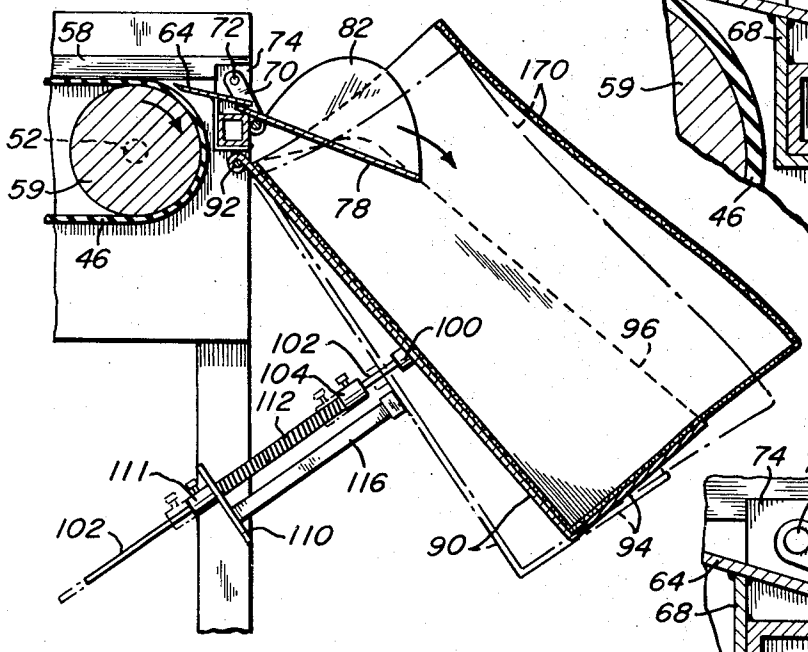

FIG-10

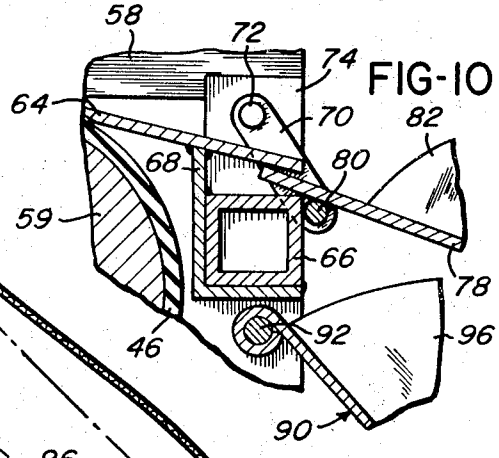

FIG-11

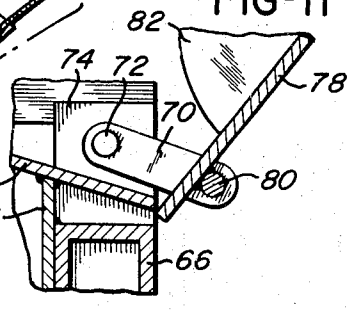

FIG-12

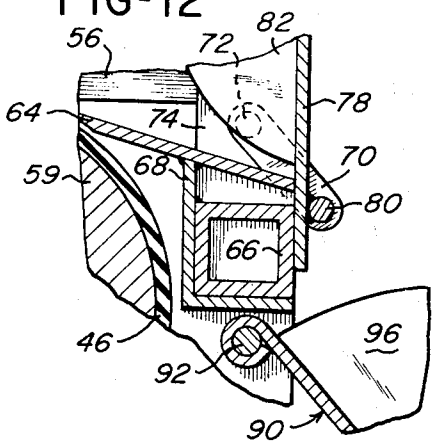

FIG-13

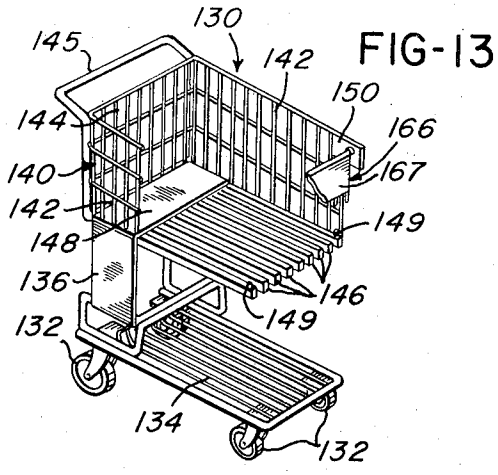

FIG-14

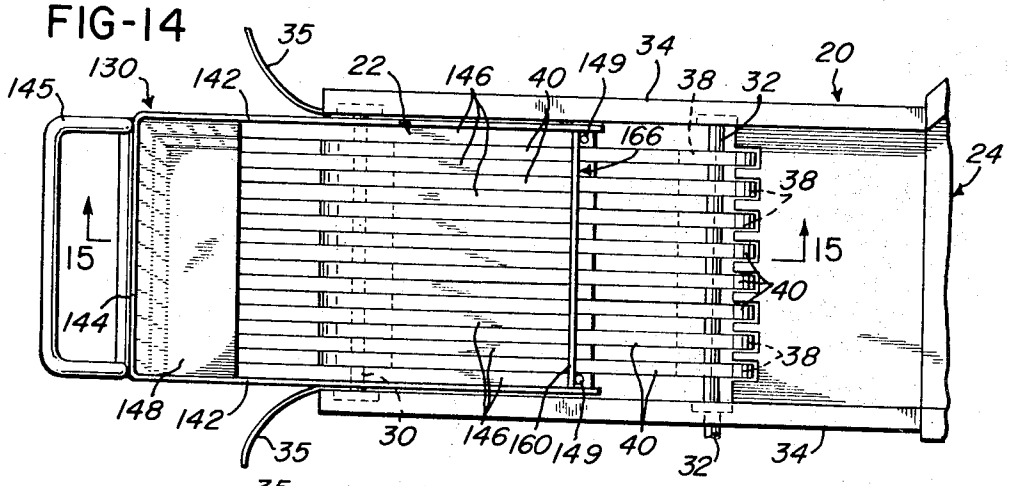

FIG-15

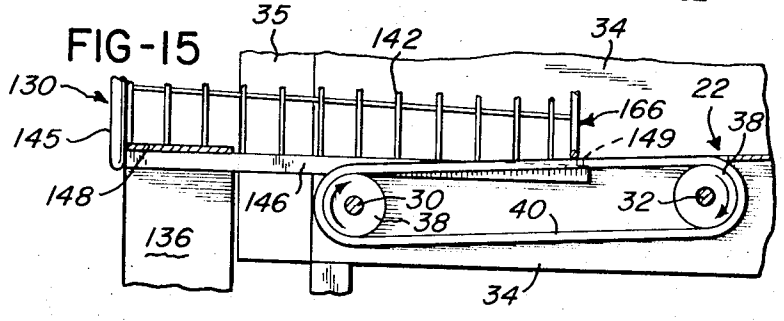

BASKET-CART UNLOAD APPARATUS FOR SUPERMARKETS

RELATED APPLICATION

This application is a division of Pat. Application Ser. No. 050,467, filed June 29, 1970 and now U.S. Pat. No. 3,678,660.

BACKGROUND OF THE INVENTION

It is an object of this invention to provide apparatus which automatically moves articles of merchandise from a basket-cart or the like to the surface of a checkout counter.

Another object of this invention is to provide apparatus by which an operator can rapidly and efficiently unload articles from a basket-cart, permitting the operator to perform other duties such as checking the articles without handling the articles.

Another object of this invention is to provide means by which a gate of a basket-cart is automatically opened for removal of articles of merchandise from the basket-cart.

Other objects and advantages reside in the construction of parts, the combination thereof, the method of manufacture, and the mode of operation, as will become more apparent from the following description.

BRIEF DESCRIPTION OF THE DRAWINGS

FIG. 1 is a perspective view of apparatus of this invention.

FIG. 2 is a top plan view of the apparatus of FIG. 1, illustrating use thereof.

FIG. 3 is an enlarged sectional view, taken substantially on line 3—3 of FIG. 2.

FIG. 4 is a sectional view, taken substantially on line 4—4 of FIG. 3.

FIG. 5 is an enlarged fragmentary view taken substantially on line 5—5 of FIG. 2.

FIG. 6 is an enlarged fragmentary view similar to FIG. 5, showing the elements thereof in another position of operation.

FIG. 7 is a fragmentary view of a portion of the apparatus of FIGS. 5 and 6, illustrating other positions of operation of elements thereof.

FIG. 8 is a fragmentary view, similar to FIG. 7, illustrating other positions of operation of the elements thereof.

FIG. 9 is an enlarged sectional view, taken substantially on line 9—9 of FIG. 2.

FIG. 10 is an enlarged fragmentary sectional view taken substantially on line 10—10 of FIG. 2, FIG. 10 being drawn on a larger scale than FIG. 9.

FIG. 11 is an enlarged fragmentary sectional view, similar to FIG. 10, illustrating movement of elements shown.

FIG. 12 is an enlarged sectional view, drawn on substantially the same scale as FIG. 10 and taken substantially on line 12—12 of FIG. 2.

FIG. 13 is a perspective view, with parts broken away, drawn on substantially the same scale as FIG. 1, showing a basket-cart of the apparatus of this invention.

FIG. 14 is an enlarged top plane view of a basket-cart and a portion of a checkout counter of this invention, with the basket-cart partially intermeshed with the checkout counter.

FIG. 15 is a sectional view, taken substantially on line 15—15 of FIG. 14.

DETAILED DESCRIPTION OF THE PREFERRED EMBODIMENT

Apparatus of this invention includes a checkout counter 20 having a receiver portion 22, an intermediate portion 24, and a discharge portion 26.

The receiver portion 22 is provided with a pair of spaced-apart shafts 30 and 32, each of which extends between side portions 34 of the receiver portion 22. Each of the side portions 34 has an arcuate director member 35 attached thereto and extending therefrom. A plurality of spaced-apart wheels 38, best shown in FIG. 4, are attached to each of the shafts 30 and 32. Belts 40 encompass the wheels 38 of the shafts 30 and 32, as each belt 40 is supported by a wheel 38 of the shaft 30 and a wheel 38 of the shaft 32. It is to be understood, however, that annular members, other than the belts 40 may be used, for example, chains, wheels, and the like.

A motor 42 shown diagrammatically in FIG. 1, is operably joined, by any suitable means, to the shaft 32 for rotation thereof. Thus, the motor 42, when energized, causes rotation of the wheels 38 and the belts 40, as illustrated in FIG. 3.

The intermediate portion 24 of the checkout counter 20 is shown as being substantially flat, for sliding movement of articles from the receiver portion 22 to the discharge portion 26.

The discharge portion 26 of the checkout counter 20 includes a relatively wide conveyor belt 46 which is supported by spaced-apart shafts 50 and 52. FIG. 9 shows a roller 59 which is carried by the shaft 52 and which partially supports the conveyor belt 46. A motor 54, shown diagrammatically in FIG. 1, is operably connected by any suitable means, so the shaft 50 for rotation thereof and for rotative movement of the conveyor belt 46.

A plurality of partition members, herein shown as partition members 56 and 58, extend over the conveyor belt 46 and divide the conveyor belt 46 into a plurality of sections, herein shown as sections 46*a*, 46*b*, and 46*c*.

At the end of the discharge portion 26 and adjacent the section 46*a* of the conveyor belt 46 is a wall 60, shown in FIGS. 1 and 2. In substantial alignment with the wall 60 and disposed between the partitions 56 and 58 and between the partition 58 and a side wall 69 is an inclined shelf 64, shown in FIGS. 10 and 12, which is attached to a support bar 66 by means of a connector 68. The uppermost part of the inclined shelf 64 is closely adjacent the belt 46. An arm 70 is pivotally connected by means of a pin 72 to a fixed bracket 74 which is attached to the partitions 56 and 58. A plate 78 is secured to a rotatable stem 80 which is carried by the pivotal arms 70 and extends therebetween. The plate 78 has flanges 82 attached thereto at opposite portions thereof. Thus, a structure comprising the elements 64, 66, 68, 69, 70, 72, 74, 78, and 80 is disposed between the partitions 56 and 58 and another such structure is disposed between the partitions 58 and the side wall 69, at the ends thereof.

Below the support bar 66 and below each plate 78 is a support element or bag holder 90 which is pivotally carried by a pin 92. The support element 90 has a floor 94 and sides 96, secured thereto.

As best shown in FIG. 9, a pad 100 engages the support element 90. The pad 100 is attached to a rod 102 which has a collar 104 secured thereto. The rod 102 freely slidably extends through a bracket 110. A collar 111 is attached to the rod 102 below the bracket 110 and limits upward travel of the rod 102. A spring 112 encompasses the rod 102 and is disposed between the bracket 110 and the collar 104. Thus, the spring 112 resiliently urges the rod 102 and the support element 90 in a direction from the bracket 110. A rigid elongate abutment member 116 is also attached to the bracket 110 and extends therefrom toward the support element 90.

A basket-cart 130 cooperates with the checkout counter 20. The basket-cart 130 has wheels 132 which support a lower rack 134. Struts 136 connect the lower rack 134 to an upper rack 140, which has side members 142 and a back member 144. A handle 145 is shown attached to the upper rack 140.

The bottom of the rack 140 has a solid section 148. A plurality of spaced-apart bars 146 are attached to the solid section 148 and extend forwardly thereof. The forward end of at least one of the bars 146 has an upwardly extending protuberance 149, as shown in FIGS. 5 and 6. At the forward portion of the basket-cart 130 and attached to the side members 142 are holders 150, each of which is provided with a keyhole shaped opening 152 which has a narrow portion 154, which terminates in a generally rectangular slot 156.

A shaft 160 extends between the holders 150 and has the ends thereof within the openings 152. Each end of the shaft 160 has a lug 162. The shaft 160 has attached thereto a gate 166. FIG. 1 shows that the gate 166 may include a sheet portion 167. It is to be understood that the gate 166 may be of wire, or may be solid, or have openings, and may be of any suitable material. The lower part of the gate 166 normally rests upon the forward part of the bars 146 and engages the upwardly extending protuberances 149 of the bars 146, as shown in FIG. 5.

OPERATION

A customer places articles of merchandise within the basket-cart 130 and then moves the basket-cart 130 to the checkout counter 20 to have the articles "checked" by a checkout clerk 180 who uses a cash register 182 or the like. The checkout clerk 180 is positioned adjacent the intermediate portion 24 of the checkout counter 20 and may have control over the operation of the motor 42. The basket-cart 130 is moved to the receiver portion 22 of the checkout counter 20, and is received by the receiver portion 22 between the director members 35.

The spacing between the belts 40 is substantially equal to the thickness of the bars 146. Therefore, as the basket-cart 130 moves between the director members 35, the basket-cart 130 also moves between the side portions 34 of the receiver portion 22 of the checkout counter 20. The bars 146 become alternately positioned with the belts 40, as illustrated in FIGS. 4 and 14. Thus, the basket-cart 130 can be moved forwardly between the side portions 34 of the receiver portion 22 until the solid section 148 comes into contact with the belts 40.

As illustrated in FIGS. 3 and 15, the portions of the belts 40 between the wheels 38 are upwardly inclined. As the basket-cart 130 is moved forwardly between the side portions 34, the bars 146 move to intermeshed juxtaposition among the belts 40. The bars 146 become positioned at a lower level than a portion of the belts 40. Thus, the belts 40 lift the gate 166 from the position thereof shown in FIG. 5 to the position thereof shown in FIG. 6. As illustrated, the belts 40 lift the gate 166 from engagement with the bars 146, above the protuberances 149. Thus, as the upper portions of the belts 40 move forwardly, the lower part of the gate 166 is moved forwardly, as illustrated in FIG. 6.

As the gate 166 is lifted and angularly moved upwardly, the shaft 160, positioned within the openings 152, is permitted to freely move upwardly, as shown in FIG. 6. Due to the fact that when the bars 146 and the belts 40 are intermeshed the belts 40 are positioned at a higher elevation than the bars 146, articles of merchandise are lifted from the bars 146 by the belts 40. Therefore, after the belts 40 cause the bottom part of the gate 166 to move forwardly, the articles of merchandise are moved forwardly upon the belts 40 to the intermediate portion 24 of the checkout counter 20.

In order to permit the articles of merchandise to freely move forward to the intermediate portion 24, without interference by the gate 166, the checkout clerk 180 may lift the forward part of the gate 166 and rotatively move the gate 166 until the gate 166 is inverted and vertically disposed, as illustrated in FIG. 7. Thus, the shaft 160 is moved downwardly into the portion 154 of the opening 152 and the lug 162 moves into the slot 156 to retain the gate 166 in the inverted vertical position, as shown in solid lines in FIG. 8. Thus, the gate 166 remains in the inverted vertical position as articles of merchandise are moved forwardly upon the belts 40 from the bars 146, to the intermediate portion 24 of the checkout counter 20.

As each article of merchandise reaches the intermediate portion 24, the checkout clerk 180 manually engages the article with one hand and operates the cash register 182 with the other hand. The clerk 180 then manually moves the article of merchandise to one of the sections 46*a*, 46*b*, or 46*c* of the conveyor belt 46.

The motor 54 rotates the conveyor belt 46 so that the upper surface thereof moves away from the intermediate portion 24, as illustrated by an arrow 186 in FIG. 2.

If the article of merchandise is relatively heavy and/or sturdy, as, for example, a can or box of merchandise, the article is moved by the checkout clerk to the 46*c* section of the conveyor belt 46. The article is then moved by the conveyor belt 46 to the inclined floor 64.

A paper bag 170 or the like rests upon the support element or bag holder 90 and the floor 94. The flanges 82 of the plate 78 extend into the bag 170 and serve to keep the top of the bag 170 open. The flanges 82, with the plate 78, form a chute and serve to direct an article into the bag 170, as the article moves from the inclined shelf 64, to the plate 78. Thus, as illustrated in FIG. 2, each article moved by the checkout clerk 180 to the section 46*c* of the conveyor belt 46 is automatically moved by the belt 46 to the inclined shelf 64, from whence the article falls to the plate 78 and is directed into the bag 170.

Light and/or delicate or breakable articles of merchandise are moved by the checkout clerk 180 to the section 46*a* of the conveyor belt 46. The section 46*a* moves each article toward the wall 60. From such position the articles may be manually and individually

placed into a bag **170** which may be positioned upon a shelf **184**, shown in FIGS. **1** and **2**.

FIGS. **1** and **2** show no bag **170** or the like supported by the bag holder **90** at the end of the section **46***b*. Thus, preferably, the plate **78** is pivotally positioned as shown in FIG. **12**. The plate **78** thus serves as a barrier to prevent movement of articles from the inclined shelf **64** which is at the end of the section **46***b*. The plate **78** may be readily pivotally moved from the position thereof shown in FIG. **10** to the position thereof shown in FIG. **12**. Such pivotal movement of the plate **78** is performed by pivotal movement of the arms **70** about the axis of the pin **72** and by pivotal movement of the plate **78** about the axis of the stem **80**, as illustrated in FIG. **11**.

Thus, it is understood that each plate **78** may be pivotally positioned as shown in FIG. **10** to form a chute or may be pivotally positioned as shown in FIG. **12** to form a barrier. When the plate **78** is in the position shown in FIG. **10**, the flanges **82** thereof assist in maintaining the upper part of the bag **170** in an open position.

As articles of merchandise move into a bag **170** which is supported by a bag holder **90**, the weight of the articles causes the bag holder **90** to pivotally move downwardly, as illustrated in FIG. **9**. The pivotal position of the bag holder **90** is determined by the spring **112**. As the weight of articles increases within the bag **170** supported by the bag holder **90**, the spring **112** permits the rod **102** to move downwardly as the rod **102** is forced downwardly by the weight of articles within the bag **170**. Such downward movement of the rod **102** is against the resiliency of the spring **112**. Thus, the bag **170** automatically becomes more vertically disposed as greater weight is disposed therewithin.

Thus, it is understood that apparatus of this invention provides means by which articles of merchandise are automatically removed from a basket-cart. The articles are then manually moved by a checkout clerk to selected sections of a conveyor belt. An article moved to each conveyor belt section is moved by the conveyor belt to a bagging position. If the plate **78** at the end of the section is pivotally disposed as shown in FIG. **10**, the article falls into a bag. If the plate **78** is pivotally disposed as shown in FIG. **12**, the article is prevented from movement from the checkout counter **20**.

After all of the articles of merchandise within the basket-cart **130** have been moved therefrom, the checkout clerk **180** lifts the gate **166** from the vertical inverted position thereof shown in FIG. **8** and permits the gate **166** to rotatively move into the basket-cart as illustrated in FIG. **8**, to again become positioned against the protuberances **149** and the bars **146**.

Although the preferred embodiment of the device has been described, it will be understood that within the purview of this invention various changes may be made in the form, details, proportion and arrangement of parts, the combination thereof and mode of operation, which generally stated consist in a device capable of carrying out the objects set forth, as disclosed and defined in the appended claims.

The invention having been described, the following is claimed:

1. In combination, stationary support structure for articles and movable support structure for articles,

the stationary support structure having a receiver portion which includes a plurality of elongate annular flexible rotatable members, the elongate annular flexible rotatable members being substantially parallel and in spaced-apart relationship, each of the elongate annular flexible rotatable members having a given width dimension,

the movable article support structure including a basket-cart provided with a plurality of spaced-apart elongate rigid members which are adapted to support articles, the elongate rigid members being in substantially parallel relationship, the elongate rigid members being spaced apart a distance at least equal to the width dimension of the annular flexible rotatable members, each of the elongate rigid members having a width dimension less than the spacing between adjacent elongate annular flexible rotatable members so that the movable support structure can be moved to a position in which the elongate rigid members are intermeshed with and alternately disposed between adjacent elongate annular flexible rotatable members and substantially parallel therewith,

the elongate annular flexible rotatable members having portions at a higher elevation than the elongate rigid members so that as the elongate flexible annular members rotatively move, articles supported by the rigid members are moved therefrom by the elongate flexible members.

2. The combination of claim **1** in which the basket-cart includes side portions extending upwardly from the bottom portion, a gate pivotally supported by the side portions, the gate normally resting upon the bottom portion, the gate being engageable by the elongate annular flexible rotatable members as the elongate annular flexible members rotatively move, the gate thus being pivotally moved to an open position by the elongate annular flexible rotatable members when the movable support structure is positioned so that the elongate rigid members are alternately disposed between adjacent elongate annular flexible rotatable members.

3. The combination of claim **2** in which at least one of the elongate rigid members has an upwardly extending protuberance which is engageable by the gate to limit pivotal movement thereof, each of the side portions of the basket-cart being provided with an elongate opening, the gate including a supporting shaft which is positioned within the opening of each of the side portions, the shaft being movable upwardly and downwardly within the openings of the side portions, the gate being movable upwardly above the protuberances as the elongate annular flexible rotatable members engage the gate and lift the gate, the gate thus being movable upwardly and pivotally in opening movement of the gate for movement of articles from the bottom portion of the basket-cart.

4. The combination of claim **3** in which each of the openings in the side portions has a slot at a lower part thereof, the shaft having a pair of lugs, there being a lug which fits into each slot when the shaft is in a given rotative position, the gate thus being maintained in a given rotative position when the lugs are in the slots.

5. The combination of claim **1** in which the stationary article support structure has a discharge portion,

conveyor belt means rotatively supported at the discharge portion, the conveyor belt means having a plurality of sections.

6. The combination of claim **1** and including at least one support member pivotally connected to said sta-

tionary support structure and having a pair of side flanges which are adapted to be disposed within a bag to assist in holding a bag open.

7. The combination of claim **1** in which the basket-cart includes a bottom portion having a plurality of substantially parallel horizontal spaced-apart bar members,

a gate disposed above the bar members,

means supporting the gate above the bottom portion for pivotal movement of the gate and for up and down movement of the gate with respect to the bottom portion.

8. The apparatus of claim **7** in which at least one of the bar members has an upwardly extending abutment portion which is engageable by the gate.

9. The apparatus of claim **7** in which the basket-cart includes side members extending upwardly from the bottom portion, each of the side members having an opening therein, the gate including a shaft, portions of the shaft being disposed within the openings of the side members, the shaft being pivotally movable within the openings, the shaft being movable upwardly and downwardly within the openings.

10. In combination:

stationary support structure for articles and movable support structure for articles,

the movable support structure including a basket-cart having a floor portion provided with a plurality of elongate openings therein,

the stationary support structure having a shelf portion provided with a plurality of elongate openings therein, the movable support structure thus being intermeshable with the stationary support structure,

carrier means carried by one of the support structures and movable adjacent the intermeshed portion of the support structures for movement of articles from the movable support structure to the stationary support structure.

11. The apparatus of claim **10** in which the stationary support structure includes a plurality of continuous belt members arranged in axially spaced-apart relationship, the basket-cart including a plurality of spaced-apart bar members, the basket-cart being movable to position a bar member between two adjacent continuous belt members, the bar members being adapted to support articles, a portion of the continuous belt members being positioned at a higher elevation than the bar members so that the continuous belt members engage articles supported by the bar members and move the articles with respect to the bar members as the articles move in a direction from the basket-cart.

* * * * *