Aug. 23, 1932. A. A. EPSTEIN 1,872,917

HYPODERMIC NEEDLE KIT

Filed Nov. 26, 1930 2 Sheets-Sheet 1

Fig. 1.

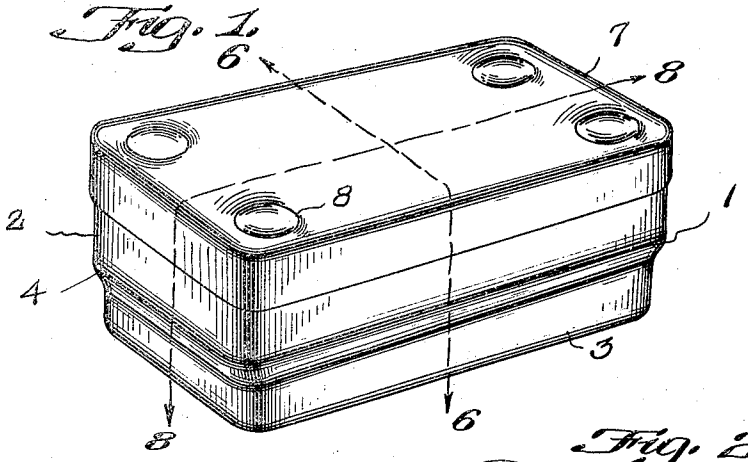

Fig. 2.

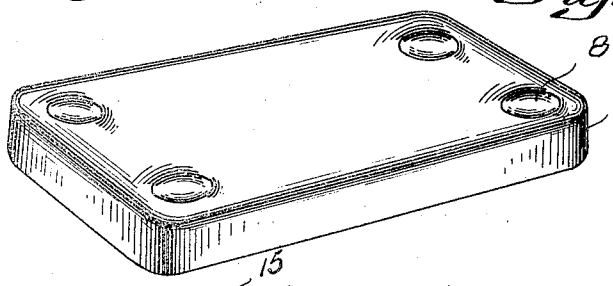

Fig. 3.

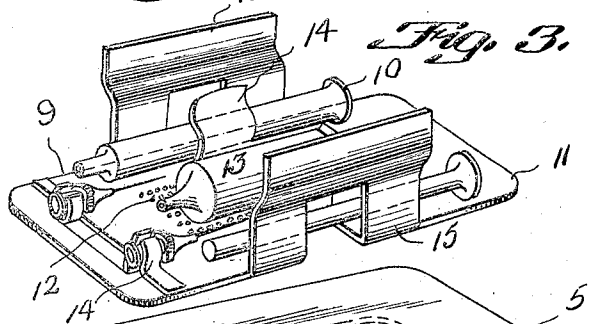

Fig. 4.

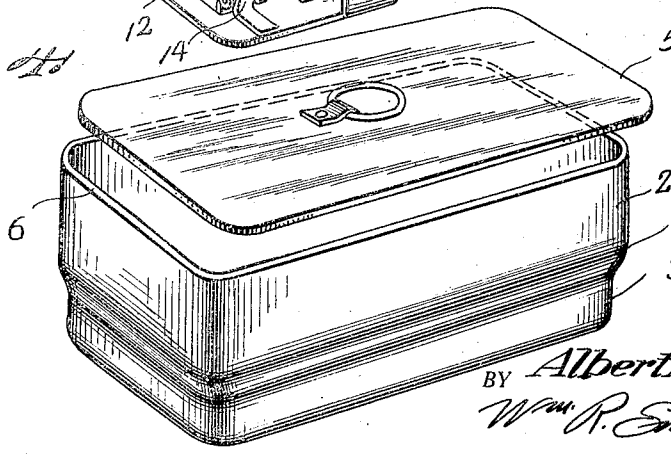

INVENTOR.

BY Albert A. Epstein

Wm. P. Smith

ATTORNEY.

Aug. 23, 1932. A. A. EPSTEIN 1,872,917

HYPODERMIC NEEDLE KIT

Filed Nov. 26, 1930 2 Sheets-Sheet 2

Fig. 5.

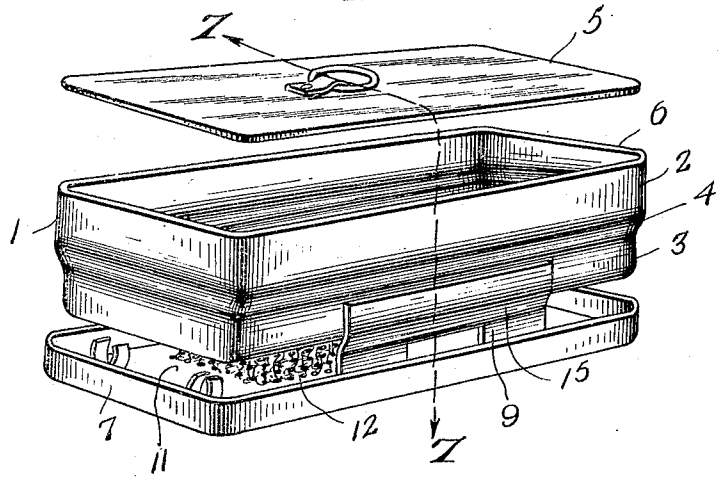

Fig. 6.

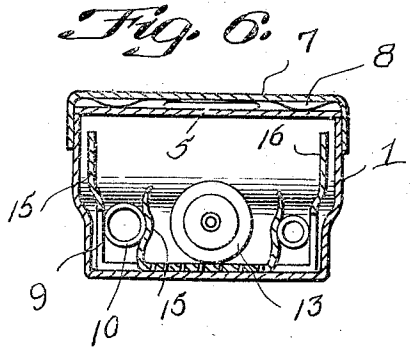

Fig. 7.

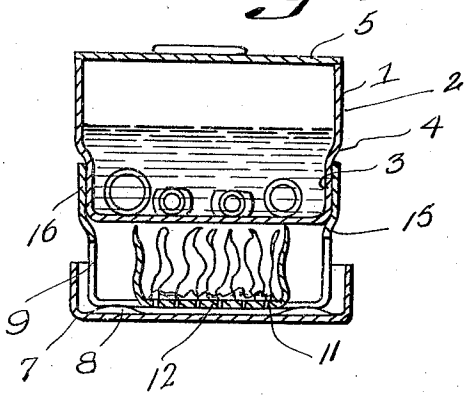

Fig. 8.

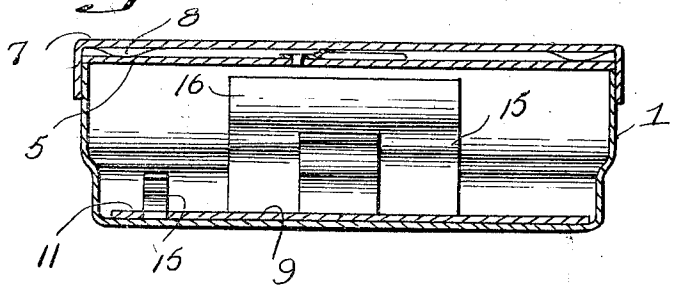

INVENTOR.

Albert A. Epstein

BY

Wm. R. Smith

ATTORNEY.

Patented Aug. 23, 1932 1,872,917

UNITED STATES PATENT OFFICE

ALBERT A. EPSTEIN, OF NEW YORK, N. Y., ASSIGNOR TO CONSOLIDATED PATENTEES CORPORATION, OF NEW YORK, N. Y., A CORPORATION OF NEW YORK

HYPODERMIC NEEDLE KIT

Application filed November 26, 1930. Serial No. 498,322.

This invention relates to a hypodermic kit and has for its primary object a design of kit whereby the various parts of a hypodermic needle may be effectively housed and protected when not in use but when about to be placed in use may be subjected to a sterilizing action.

An object of the invention is a design of kit having a plurality of parts arranged and associated in a unique manner whereby the kit may have the appearance of an ordinary box when not in use but capable of having the parts separated and associated in new relation for supporting the needle parts for sterilizing action by a burning fluid supported by a part of the kit.

Another object of the invention resides in the novel manner of designing the support whereby the same may perform the dual function of effectively supporting the needle parts and a tube of fuel paste within the kit and supporting the box in spaced relation with the lid for allowing a burning fuel to heat the box in which the needle parts have been placed for sterilizing purposes.

Another object of the invention resides in the combination in a unitary article of a number of elements that collectively may enable the proper supporting of all parts of a hypodermic needle and the sterilizing thereof prior to use by the discharge of a fuel paste upon a part of the kit and the burning thereof on a part of the kit.

Besides the above my invention is distinguished in the novel design and correlation of the component parts of the kit whereby they may be telescoped when not in use for minimizing space but capable of connection with each other for supporting the parts in spaced exposed relation for performing a sterilizing operation.

My invention is also distinguished in the sheet metal construction of the component parts whereby they may be economically manufactured.

With these and other objects in view my invention will be better understood from the following detailed description taken in connection with the accompanying drawings, wherein:

Figure 1 is a perspective view of the box when not in use.

Figure 2 is a perspective view of the cover.

Figure 3 is a perspective view of the supporting device.

Figure 4 is a perspective view of the box with the lid thereof in spaced relation.

Figure 5 is a perspective view of the cover, box and lid in associated positions.

Figure 6 is a sectional view on line 6—6 Figure 1.

Figure 7 is a sectional view on line 7—7 Figure 5.

Figure 8 is a sectional view on line 8—8 Figure 1.

Again referring to the drawings illustrating one of the many embodiments of my invention numeral 1 designates a box designed to form a flared upper portion 2 and a contact lower portion 3, a shoulder 4 being formed therebetween for a purpose hereinafter set forth.

A lid 5 is provided for the box of an area to rest neatly on the upper edge 6 of the box but will be snugly received within the cover 7 when the latter has been telescoped over the upper edge portion of the box as illustrated in Figure 6. This cover 7 is provided with projections 8 stamped thereto for a purpose hereinafter described. A very important feature of my invention resides in the support or device 9 that is provided to support the needle parts 10 in proper spaced relation within the box and to support the box 1 in spaced relation with the cover as illustrated in Figure 5.

To accomplish these desired objectives the support or device is provided with a base plate 11 snugly received within the cover. This base plate 3 is provided with a centrally located perforated portion 12 for supporting a fuel for heating the contents of the box 1. As an improvement for my invention I produced this fuel in the form of a paste within a collapsible tube 13 which is arranged upon the base plate 11. For effectively holding the needle parts 10 in proper spaced relation I have provided a plurality of clips 14 carried by the base plate 11. Integral with the base plate 11 and upstanding therefrom are

brackets 15 of a size to be completely received within the box as illustrated in Figure 6 but capable of projecting a predetermined distance above the cover when the base plate 11 rests upon the projection 8. These brackets 15 have off set portions 16 in telescopic engagement with the portion 3 of the box for effectively supporting the box in spaced relation with the cover. Thus it will be appreciated that air currents may pass between the cover and the box arranged in spaced relation with the perforated portion 12.

When the kit is not in use it is assembled as shown in Figure 1 which enables the delicate parts of the hypodermic needle, the tube of paste, the support and the lid to be completely housed and protected. When the kit is to be put into use the cover 7 is removed and arranged in an inverted position on a suitable support such as a table. The support 9 is then lifted from within the box 1 and placed upon the projections 8 thereby providing an air space under the perforated portion 12 to assure proper air circulation for supporting combustion. The separated parts of the needle are arranged in the box 1 submerged in a sterilizing fluid such as heated water. A small quantity of the combustible paste is pressed from the tube 13 onto the perforated portions 12 after which the box 1 is arranged upon the bracket 15 for supporting the same in spaced relation to the flame produced by the combustion of the paste. The lid 5 is arranged upon the box 1 and in a very short time the water is brought to a boiling point thereby quickly sterilizing the parts of the needle. The amount of paste deposited on the base plate 11 is of a sufficient quantity to bring the water to a boil for a sufficient period. The products of combustion can be readily removed from the base plate 11 after this operation. It is a very simple operation to remove the box 1 from the brackets to pour the water therefrom and remove the needle parts for assemblage. After the use of the needle has been completed the parts are separated and placed in engagement with the clips 14, the tube of paste 13 being arranged between the clips as shown in Figure 3. To complete assemblage of the parts of the kit as illustrated in Figure 1, the support is arranged within the box and the cover arranged in place which finishes the assemblage of the parts and the complete connection thereof against accidental displacement.

Of course, it is to be understood that the support may be designed and constructed in many other manners than illustrated and the box and cover designed in other manners for different connections with each other and besides the component parts of the article may be given other configurations than illustrated and therefore I do not wish to be limited in protection in any manner whatsoever except as set forth in the following claims:

What I claim is:

1. A hypodermic kit comprising a box, a lid for the box, a cover for the box, a support within the box, needle parts supported by said support and a tube of fuel paste carried by said support, said support adapted to be arranged within said cover when detached from the box and adapted to be held in an elevated position above the cover of said box whereby fuel paste from said tube when deposited upon said support may be utilized to heat the bottom of said box.

2. A hypodermic kit comprising a box, a support having brackets and a perforated fuel receiving portion centrally located, a tube of fuel paste carried by said support, needle parts carried by said support, a cover for engagement with the box and adapted to be detached from said box and arranged in inverted position to hold said support, said box adapted to be supported in spaced relation with said cover by said brackets whereby the needle arranged in said box may be heated by fuel paste discharged from said tube upon the perforated portion of said support.

3. The combination of a hypodermic needle supporting box a cover therefor and a support having a perforated fuel supporting base plate adapted to be arranged in spaced relation with said cover when removed from said box, said support adapted to hold said box in spaced relation with the cover.

4. A hypodermic needle kit comprising a box, a cover for the box having an upstanding flange and projections confined within the flange, a hypodermic needle support having a fuel receiving perforated central portion adapted to rest upon said projections to space the same from the surface of said cover for allowing circulation of air through said perforated portion, said support being further provided with offset end portions for clamping engagement with the sides of said box for holding the same in fixed elevated relation with said perforated fuel receiving portion.

In witness whereof I have hereunto set my hand.

ALBERT A. EPSTEIN.