United States Patent [19]

Genaro et al.

[11] **Patent Number: Des. 302,267**

[45] **Date of Patent: ** Jul. 18, 1989**

[54] **PORTABLE COMPUTER HOUSING**

[75] Inventors: **Donald M. Genaro**, Haworth; **Thomas J. Kelly**, Colts Neck; **Stephen G. Miggels**, Wyckoff, all of N.J.; **Gordon E. Sylvester**, Jamaica, N.Y.

[73] Assignees: **American Telephone and Telegraph Company**, New York, N.Y.; **AT&T Information Systems Inc.**, Morristown, N.J.

[**] Term: **14 Years**

[21] Appl. No.: **894,638**

[22] Filed: **Aug. 8, 1986**

[52] **U.S. Cl.** **D14/106**; D14/100

[58] **Field of Search** ..... D14/100, 101, 106, 111; 174/50, 52 R; 364/708; 340/700; 312/208

[56] **References Cited**

U.S. PATENT DOCUMENTS

D. 278,861	5/1985	Hasuike	D3/72
D. 280,622	9/1985	Moggridge et al.	D14/100
D. 282,843	3/1986	Kurihara	D14/100
D. 283,511	4/1986	Dunn	D14/106
D. 290,256	6/1987	Sapper	D14/106
D. 294,029	2/1988	Nishiyama et al.	D14/106
D. 294,831	3/1988	Hara et al.	D14/106
D. 295,519	5/1988	Kimble	D14/106
4,497,036	1/1985	Dunn	364/708
4,527,149	7/1985	Swensen	340/365 R
4,769,764	9/1988	Levanon	364/708

OTHER PUBLICATIONS

Form 111 103-1983, p. 47-(portable Computer at top of page).

Business Week, Apr. 14, 1986, Advertisement for Zenith Z-171 PC.

Electronic Design, Sep. 5, 1985, Computer Systems, "Portable computer is IBM PC-compatible," p. 199.

Business Week, Sep. 2, 1985, Advertisement for the Panasonic Exec. Partner.

Primary Examiner—Susan J. Lucas

Assistant Examiner—Freda S. Nunn

Attorney, Agent, or Firm—Frederick B. Luludis

[57] **CLAIM**

The ornamental design for a portable computer housing, as shown and described.

DESCRIPTION

FIG. **1** is a right, front, top perspective view of a portable computer housing embodying our new design;

FIGS. **2, 3, 4** and **5** are respectively front, left side, right side and rear elevation views thereof;

FIGS. **6** and **7** are respectively bottom and top plan views thereof;

FIG. **8** is a bottom plan view thereof with the handle shown in a carrying position;

FIG. **9** is a right side elevation view thereof;

FIG. **10** is a right, front, top perspective view of the portable computer housing of FIG. **1** with the top, front section of the housing opened to a viewing position and rear cover plate rotated to a pedestal position;

FIGS. **11, 12, 13** and **14** are respectively front, left side, right side and rear elevation views of the housing as shown in FIG. **10**;

FIGS. **15** and **16** are respectively bottom and top plan views of the housing as shown in FIG. **10**; and

FIG. **17** is a right, front, top perspective view of the housing as shown in FIG. **10** with the front, top section tilted to an alternate position.

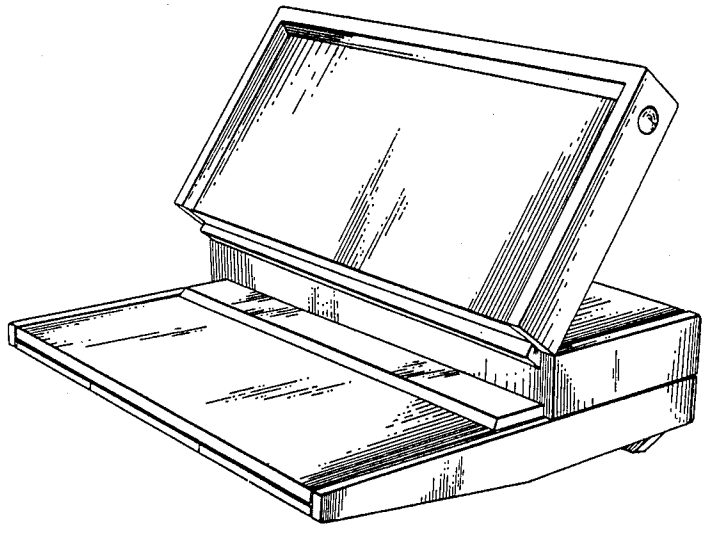

FIG. 1

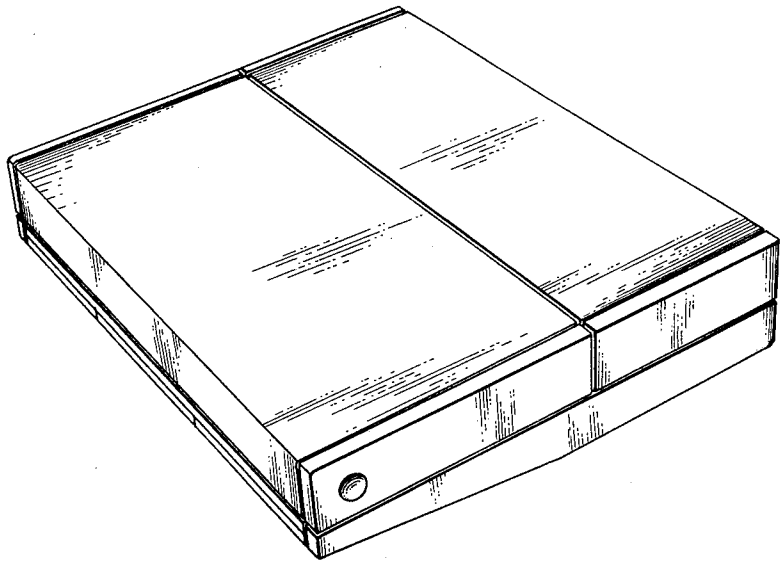

FIG. 2

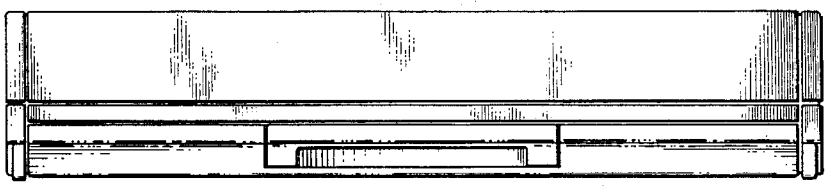

FIG. 3

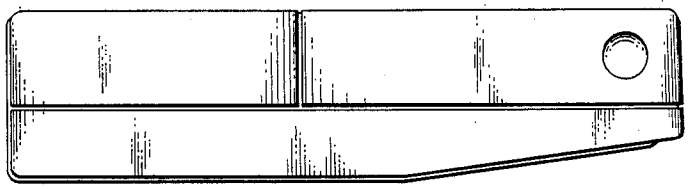

FIG. 4

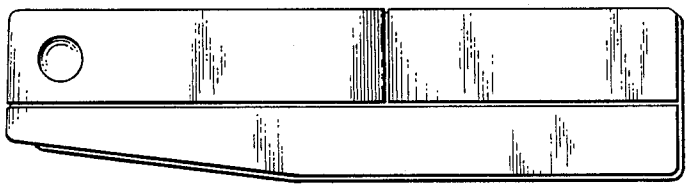

FIG. 5

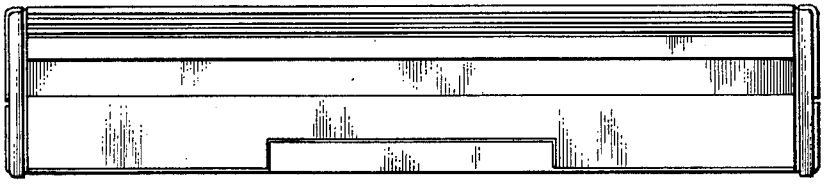

FIG. 6

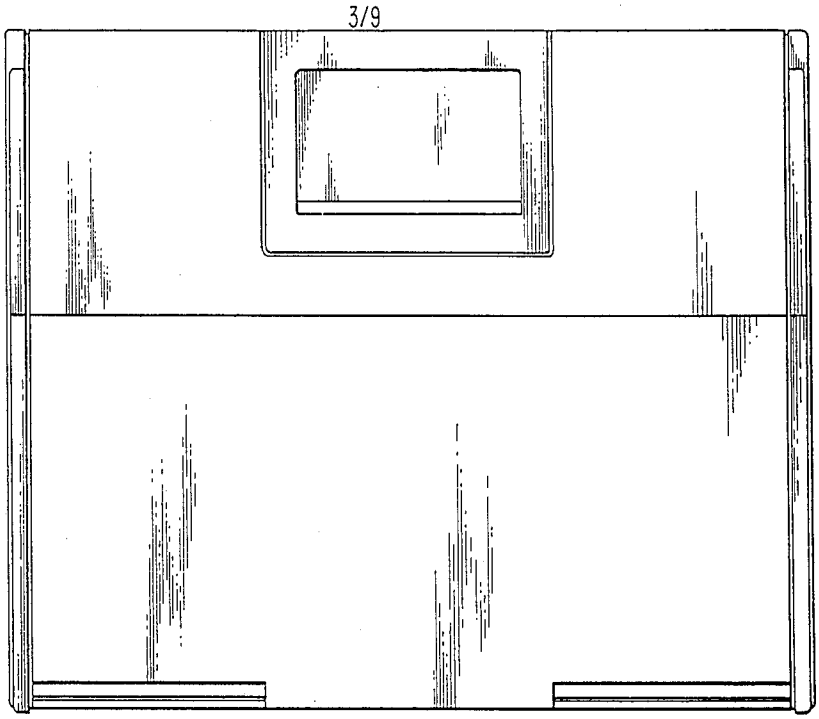

FIG. 7

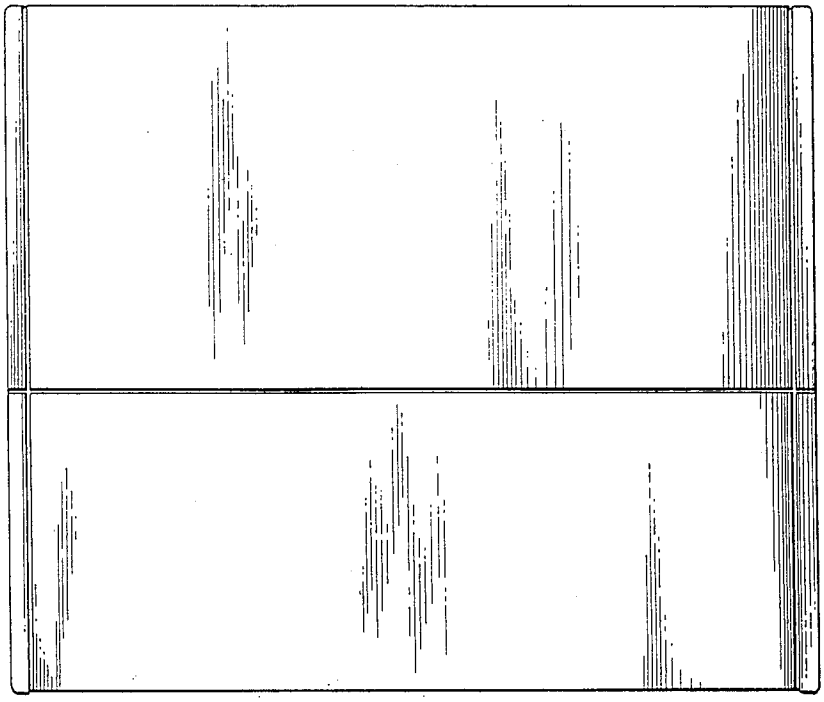

FIG. 8

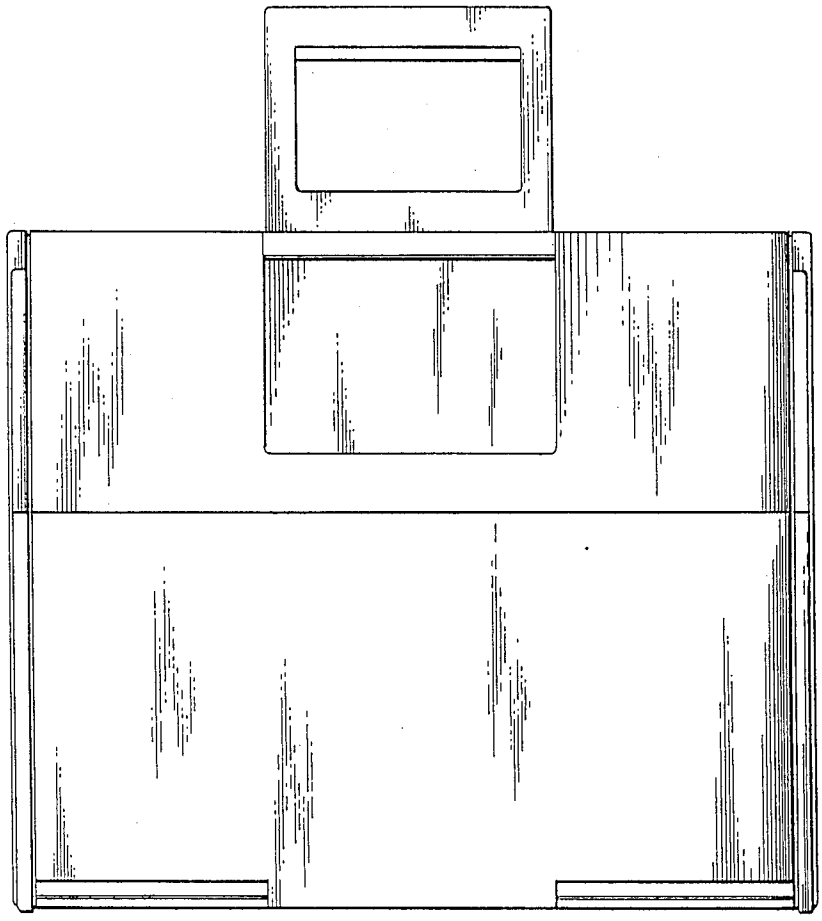

FIG. 9

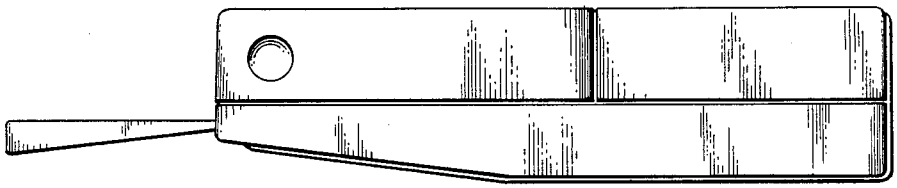

FIG. 10

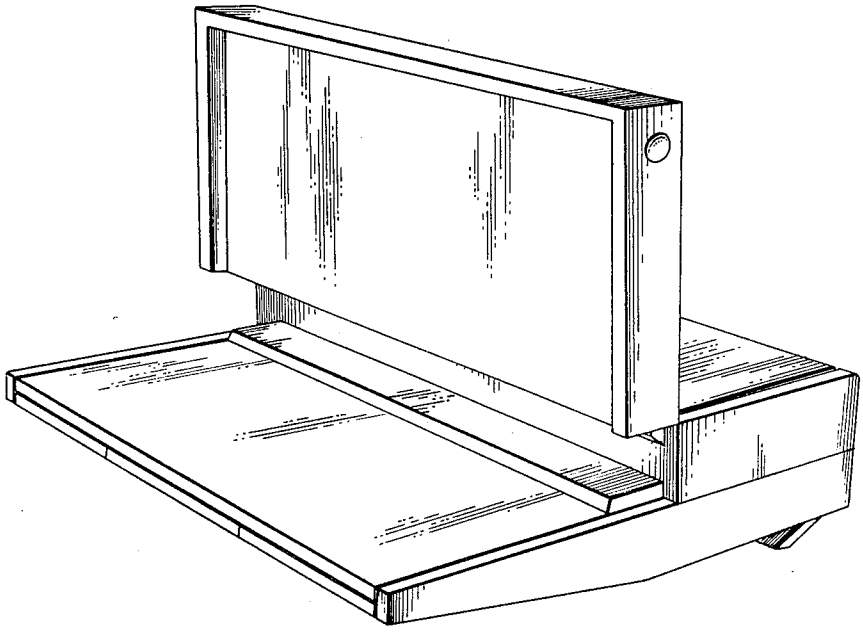

FIG. 11

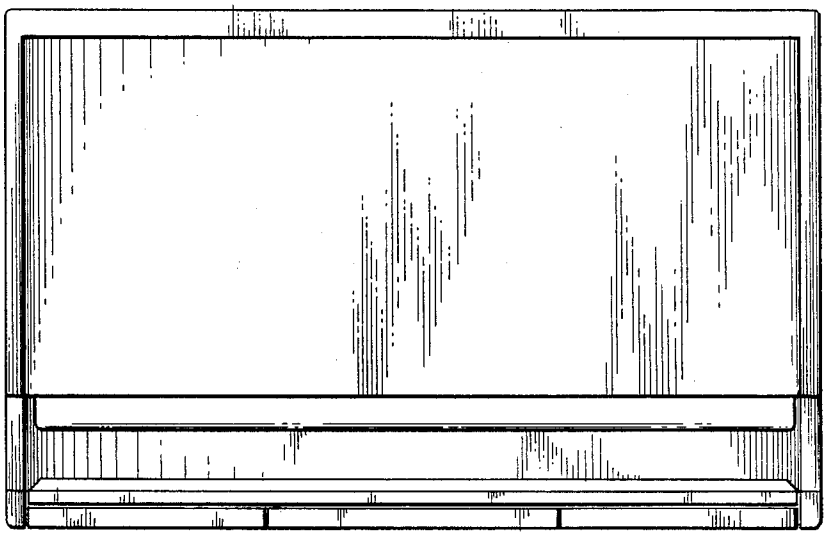

FIG. 12

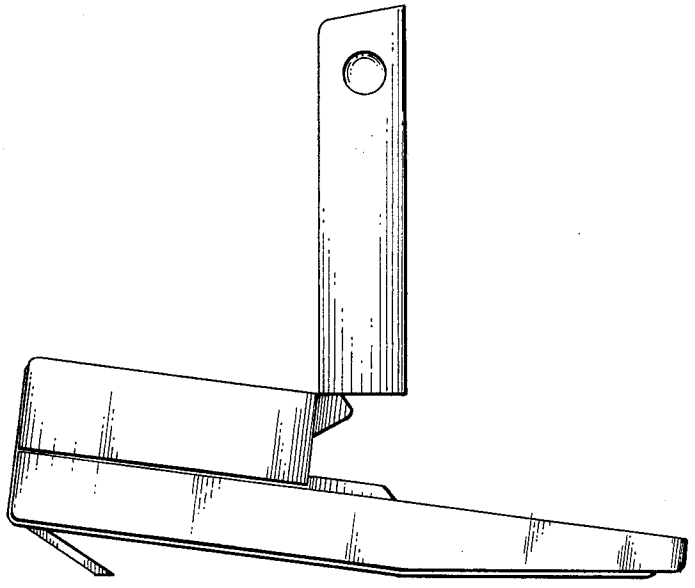

FIG. 13

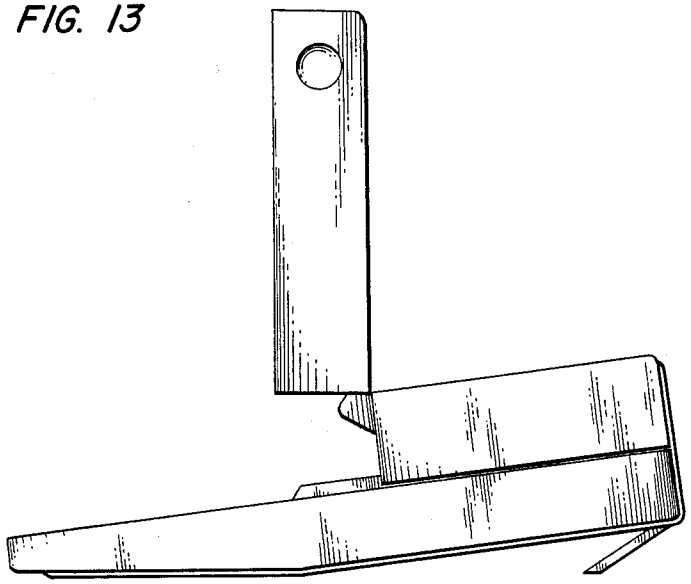

FIG. 14

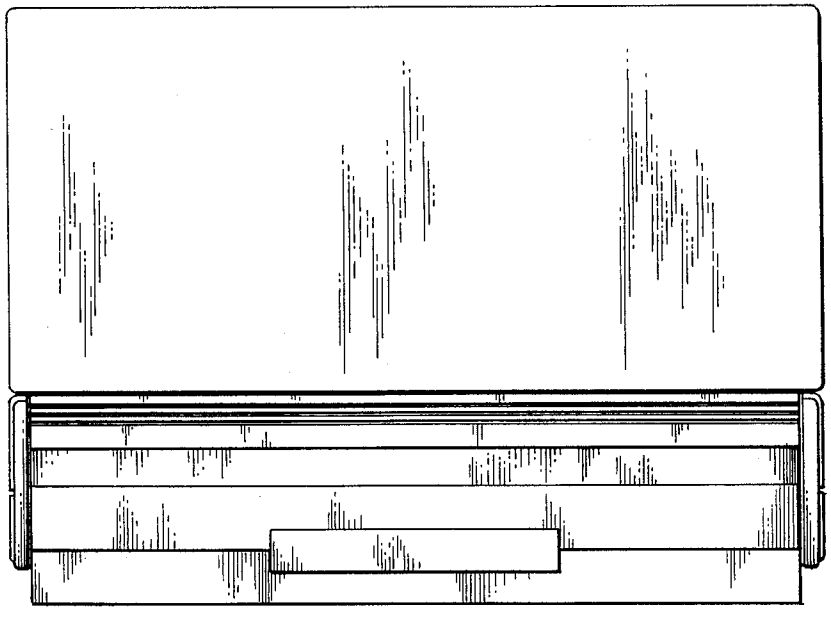

FIG. 15

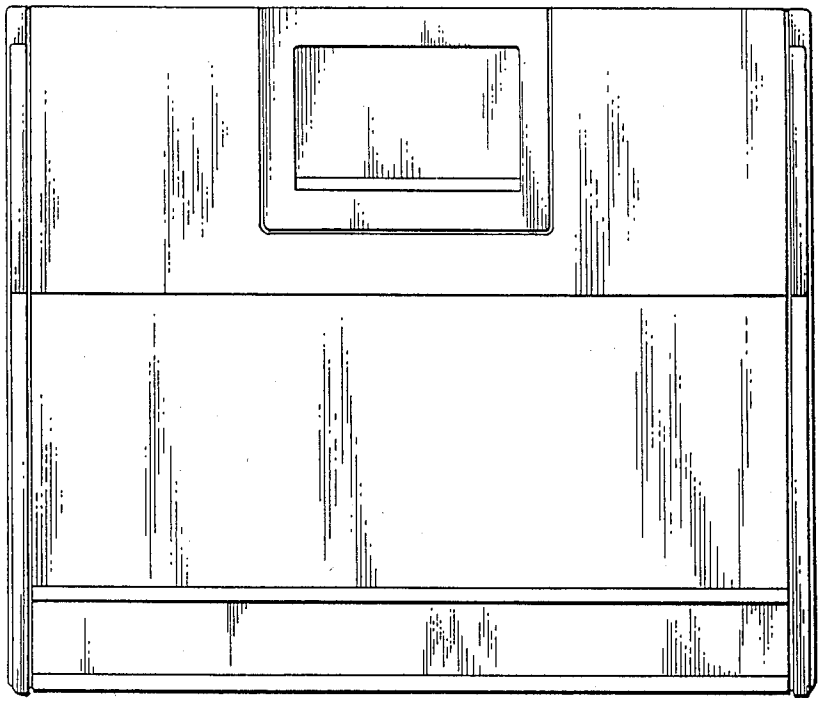

FIG. 16

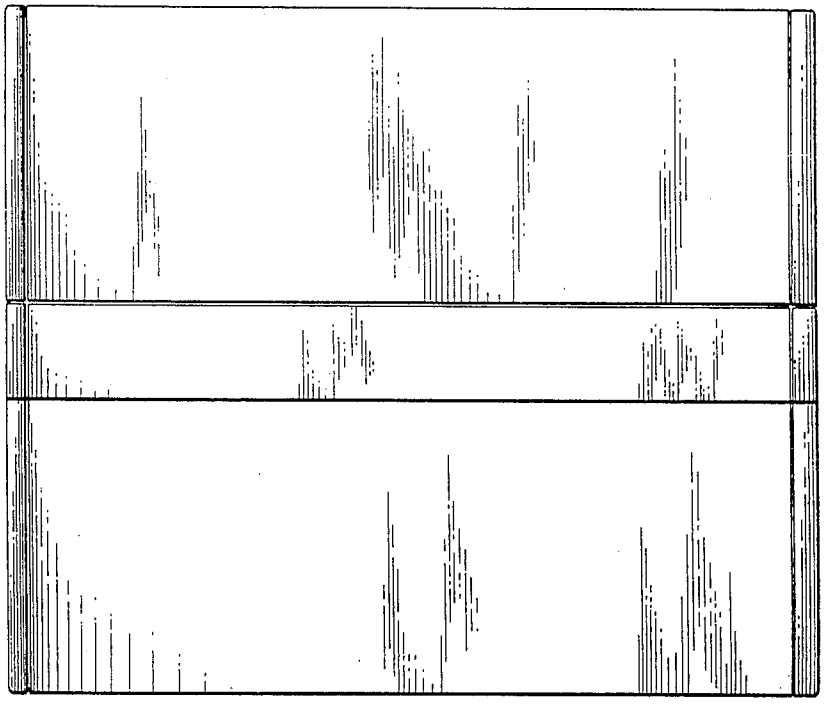

FIG. 17

