(19) DANMARK

(10) **DK/EP 2614000 T3**

(12) Oversættelse af europæisk patentskrift

Patent- og Varemærkestyrelsen

(51) Int.Cl.: ***B 63 H 21/38 (2006.01)*** *B 63 H 5/125 (2006.01)* *B 63 H 23/32 (2006.01)* ***B 63 H 23/06 (2006.01)*** *B 63 H 23/04 (2006.01)* ***F 16 H 57/04 (2010.01)*** *B 63 H 23/30 (2006.01)*

(45) Oversættelsen bekendtgjort den: **2018-05-28**

(80) Dato for Den Europæiske Patentmyndigheds bekendtgørelse om meddelelse af patentet: **2018-02-14**

(86) Europæisk ansøgning nr.: **11755276.0**

(86) Europæisk indleveringsdag: **2011-09-06**

(87) Den europæiske ansøgnings publiceringsdag: **2013-07-17**

(86) International ansøgning nr.: **EP2011004480**

(87) Internationalt publikationsnr.: **WO2012031741**

(30) Prioritet: **2010-09-06 DE 102010044436**

(84) Designerede stater: **AL AT BE BG CH CY CZ DE DK EE ES FI FR GB GR HR HU IE IS IT LI LT LU LV MC MK MT NL NO PL PT RO RS SE SI SK SM TR**

(73) Patenthaver: **REINTRIEB GmbH, Siebensterngasse 32-34, 1070 Wien, Østrig**

(72) Opfinder: **LAIS, Siegfried, Dorfstrasse 3, 56322 Spay, Tyskland**

(74) Fuldmægtig i Danmark: **HØIBERG P/S, Adelgade 12, 1304 København K, Danmark**

(54) Benævnelse: **Gearkasse**

(56) Fremdragne publikationer:
WO-A1-2005/100810
WO-A2-2005/120798
WO-A2-2007/109784
DE-A1- 1 808 637
DE-A1- 10 019 516
DE-C- 875 771
GB-A- 1 452 568
GB-A- 2 164 308
US-A- 3 487 805
US-A- 4 948 384
US-A1- 2007 253 656
US-B1- 6 318 898
WANG S Y ET AL: "Enhancement of surface properties of 45<#> carbon steel using plasma immersion ion implantation", THIN SOLID FILMS, ELSEVIER-SEQUOIA S.A. LAUSANNE, CH, Bd. 311, Nr. 1-2, 31. Dezember 1997 (1997-12-31), Seiten 190-195, XP004121341, ISSN: 0040-6090, DOI: 10.1016/S0040-6090(97)00465-3
TEETER F J ET AL: "WEAR PROTECTION FOR GEARS", GEAR TECHNOLOGY, RANDALL PUBLISHING CO. ELK GROVE, ILLINOIS, US, Bd. 13, Nr. 2, 1. März 1996 (1996-03-01), Seiten 27-29, XP000550309, ISSN: 0743-

Fortsættes ...

Description

[0001] The invention relates to a gearbox, in particular for a watercraft, according to the generic term of Claim 1. It also relates to a method for operating such a gearbox. The invention further relates to a gearbox in accordance with the generic term of Claim 11.

[0002] Standard gearboxes usually use oil as a coolant and lubricant. In order to be able to guarantee sufficient lubrication or cooling, several thousand litres of oil must be fed to the gearbox and removed from it again. In order to prevent an exit of the oil into the environment, the cooling and lubricant system must be sealed. Since an exit of the oil would lead to contamination of the surrounding water, the standards for tightness of the gearbox and its components are very high. This requires a complex construction of the individual components of the gearbox, and has been shown to be very cost-intensive. Furthermore, the procurement and disposal of the oil is linked to high costs. Ultimately, valuable storage space within the watercraft that is used to store the oil is lost.

[0003] US 2007/253656 A1 relates to a ship gearbox comprising a cardan bearing formed from a bearing housing that comprises an inner bore hole, wherein at least a portion of said inner bore hole is equipped with a coating that contains a dry lubricant. Further, the cardan bearing contains a bearing element comprising an outer ring that is inserted into the inner bore hole of the bearing housing, wherein at least a portion of the outer area of the outer ring is provided with a chromate coating. Additionally, the inner ring comprises an inner barrel bore, an outer surface and two radial inner areas that extend between the barrel bore and the outer area. Both the inner barrel bore and the outer surface and the radial front areas are provided with coatings containing chromate. With the ship gearbox arrangement according to US 2007/0253656 A1, a device is intended to be provided containing components that are movable in relation to each other, such as a cardan bearing arrangement containing a housing ring and a concentrically arranged bearing. The device according to US 2007/0253656 A1 should be characterised by its improved corrosion resistance to marine environmental conditions. Assemblies of a cardan bearing should also be easier to remove and replace.

[0004] DE 875 771 C relates to a gearbox facility with bevel wheel gears for the propeller of a watercraft with a sliding bearing. The propeller shaft is mounted in a housing by means of the sliding bearing. The bearing and wheels of the bevel wheel gear are lubricated by water. DE 875 771 C discloses the features of the generic term of Claims 1

and 11. The object of the present invention is to suggest an improved gearbox that has a simple structure and in which costs are reduced.

[0005] The object is attained by a first gearbox according to the invention in accordance with the features of patent Claim 1.

[0006] It is of particular advantage that with the first gearbox according to the invention, due to its corrosion resistance, water or an aqueous solution can also be used as a coolant and lubricant.

[0007] The first gearbox according to the invention is therefore a water-lubricated gearbox. The coolant and/or lubricant comprises water or an aqueous system. The aqueous system can here be formed from an aqueous solution. Due to the fact that the coolant and lubricant comprises water or an aqueous solution, no costly sealing of the cooling and lubricating device is required. Furthermore, surrounding water can be used for the coolant and lubricant which surrounds the first gearbox. The provision of storage space for coolant and lubricant within the watercraft is thus no longer required.

[0008] It is preferred that the first gearbox is one that is designed in such a manner that capacities of greater than 111 kW, preferably capacities of greater than or equal to 500 kW, preferably capacities of greater than or equal to 1,000 kW or even greater than or equal to 10,000 kW can be transmitted.

[0009] The housing can surround the first coupling section and/or the second coupling section as a whole or only in sections. In the latter case, the housing can for example be designed simply as a frame, a rack or a carrier, in particular a carrier arm, which supports the first bearing and/or the second bearing.

[0010] The first shaft and the second shaft, and the first bearing and the second bearing, can be formed from any material required. This can comprise e.g. stainless steel or also a standard steel, in particular a ferritic steel.

[0011] The rustproof material or the anti-corrosion coating can comprise ceramic or at least one fibre-reinforced ceramic material, or at least one corrosion-resistant hard metallic material, or at least one rustproof steel, in particular austenitic steel.

[0012] It has been shown to be advantageous when the first coupling section and the second coupling section each comprise at least one gearwheel, formed from or comprising ceramic or at least one fibre-reinforced ceramic material or at least one corrosion-resistant hard metallic material, or at least one rustproof steel, in particular austenitic steel, or that at least one tooth flank, at least one tooth of the gearwheel has a coating that is formed from ceramic or at least one fibre-reinforced ceramic material, or at least one corrosion-resistant hard metallic material, in particular austenitic steel. The

particularly preferred hard metallic materials are for example sintered carbite hard metals.

[0013] Rustproof steels in the sense of the present invention should be understood as being such steels with a high share of chrome, preferably of more than 10.5%. Chrome is here dissolved in the austenitic or ferritic mixed crystal. Rustproof steels in the sense of the following invention also comprise those that contain nickel, molybdenum, manganese and/or niobium as additional alloy elements. Suitable rustproof steels comprise for example the alloy X5CrNi18-10 (material number 1.4301) und X2CrNi 18-9 (material number 1.4307) and in particular also X6CrNiMoTi17-12-2 (material number 1.4571) and X2CrNiMo17-12-2 (material number 1.4404). Further rustproof steels comprise types X30Cr13 and X50CrMoV15 and X2CrNiMoN22-5-3 (material number1.4462), X2CrTi12 (material number 1.4512), X2CrTiNb18 (material number 1.4509) and X3CrTi17 (material number 1.4510). Chrome-nickel alloys which contain less than 50% iron, such as alloy type NiCr8020, are also suitable as corrosion-resistant materials for the gearbox according to the invention.

[0014] In one embodiment, austenitic steels are used as the preferred rustproof steels. Austenitic steels contain g-crystals of iron alloys. Elements such as nickel, cobalt, carbon and manganese are known as suitable austenite formers.

[0015] The gearwheel can also comprise in its entirety a corrosion-resistant material, or only the tooth flanks can be coated with such a material. As a result, it is achieved that during operation of the first gearbox, the essential components of the first gearbox that are exposed to wear are protected against corrosion, which leads to a reduction in wear of the first gearbox.

[0016] In an alternative further development of the latter inventive principle, it is provided that the first coupling section and/or the second coupling section respectively comprise at least one screw with at least one screw wheel respectively, formed from or comprising ceramic or at least one fibre-reinforced ceramic material, or at least one corrosion-proof hard metallic material or at least one rustproof steel, in particular austenitic steel, or at least one coating on at least one tooth flank of a screw wheel, which can be formed from ceramic or at least one fibre-reinforced ceramic material or at least one corrosion-resistant hard metallic material, in particular austenitic steel.

[0017] The coupling sections can in general be formed as required when they interact in such a manner that a torque can be transmitted from the first shaft onto the second shaft or vice-versa. This can generally occur either mechanically or magnetically. The coupling sections can, in the case of mechanical transmission of torques, generally be

formed as required, as long as they form an undercut with the geometry of the other coupling section while transmitting the forces. It is preferred that the coupling sections are designed to be complementary to each other.

[0018] In a further development of the invention, it has been shown to be advantageous when the first bearing and/or the second bearing comprise at least one rustproof steel, in particular austenitic steel, which is hardened or consolidated, in particular by means of nitration, solution nitriding, strain hardening, in particular shot peening. In another further development of the invention, it has been shown to be advantageous when the first coupling section and/or the second coupling section comprise at least one rustproof steel, in particular austenitic steel, which is hardened or consolidated, in particular by means of nitration, solution nitriding, strain hardening, in particular shot peening. In such a case, it is guaranteed that the first gearbox according to the invention can also be used to transmit high torques.

[0019] The geometry of the individual teeth of the gearwheels of the coupling sections can in general be selected as required. For example, a polygon tooth system is feasible. However, it is preferred when the number of teeth and the geometry of the teeth is adapted to the respective load and to the coolant and lubricant. Water or aqueous solutions have a lower viscosity than oils, and as a result can be distributed more easily on a surface. Furthermore, it is feasible that the first coupling section and the second coupling section have different numbers of teeth respectively from each other, and that the individual teeth of the two coupling sections deviate from each other in their geometry. Further, the respective gearwheels of the first coupling section and the second coupling section can deviate from each other in terms of their size and diameter, or be formed in the same way.

[0020] According to the invention, it is provided that the coolant and lubricant has a feed unit comprising at least one pump, with which the coolant and lubricant can be transported to or between the contact surfaces of the first coupling section and the second coupling section, and of the first bearing and the second bearing, for hydrostatic or hydrodynamic lubrication.

[0021] In general, it is feasible with one embodiment that the first bearing and/or the second bearing are hydrostatically lubricated. For this purpose, a control system can be provided in such a case. However, it has been shown to be cost intensive when the first bearing and the second bearing are hydrodynamically lubricated. With hydrodynamic lubrication, the coolant and lubricant are distributed on the surface by construction parts that come into contact with each other.

[0022] Furthermore, it is provided that the first coupling section and the second coupling section are also lubricated hydrostatically or hydrodynamically.

[0023] Cooling the first bearing and/or the second bearing can take place via thermal conduction. Here, the bearings are connected to a material with high thermal conductivity, which transports the heat away and emits it into the surrounding, for example. In order to avoid high rotational speeds, it is preferred that convective cooling is additionally provided by pressing the coolant and lubricant into the first bearing and/or the second bearing. In an advantageous manner, in addition to a convective cooling of the bearing, a lubrication of said bearing is also achieved.

[0024] This applies in the same manner to the first coupling section and/or the second coupling section, which is convectively cooled both through the feed of the coolant or lubricant, but also additionally by means of the outward thermal convection.

[0025] In general, with the water or the aqueous system, on-board water or an on-board aqueous solution can be used. According to the invention, it is provided, however, that the coolant and lubricant comprises surrounding water, in particular river water or sea water. As a result, the gearbox has an almost unlimited reservoir of coolant and lubricant available.

[0026] The coolant and lubricant can comprise untreated surrounding water. However, it has been shown to be advantageous when the cooling and lubricating device comprises a treatment unit with which an additive can be added to the coolant and lubricant, which in particular comprises anti-freeze agent, glycols, soap or another agent that reduces the surface tension of the coolant and lubricant.

[0027] As a result, it is guaranteed that the coolant and lubricant comes close to the surface of the first coupling device and/or the second coupling device, and of the first bearing and/or the second bearing, in particular also when this surface has hydrophobic properties.

[0028] According to the invention, it is provided that the treatment unit of the cooling and lubricating device is designed in such a manner that with it, the coolant and lubricant can be filtered and cleaned by means of a filter, in particular, can be de-mineralized and/or de-ionized.

[0029] As a result, it is achieved that when use is made of surrounding water, this is treated in such a manner that contamination that could damage the gearbox is filtered out. Furthermore, the tendency to corrosion of the gearbox is further reduced and the longevity is increased when the coolant and lubricant is de-mineralized or de-ionized.

[0030] The first gearbox can be arranged anywhere required, in particular outside the surrounding water. In such cases, the coolant and lubricant is fed to the first gearbox.

[0031] In a further development of the first gearbox according to the invention, it is provided that the first bearing and/or the second bearing is made of ceramic or a fibre-reinforced ceramic material, or a corrosion-resistant hard metallic material, or at least one rustproof steel, in particular austenitic steel, or that at least the respective bearing surface has at least one coating that is formed from ceramic or at least one fibre-reinforced ceramic material, or at least one corrosion-resistant hard metallic material, in particular austenitic steel.

[0032] The first bearing and/or the second bearing can be made from any bearing material required. It has been shown to be advantageous when the first bearing and/or the second bearing comprises a sliding bearing that is made of plastic, rubber, bronze and/or steel.

[0033] The housing can also be formed as required. For example, the housing can form just one holder for the first bearing and/or the second bearing. Furthermore, the housing can also be designed in such a manner that it fully separates the first and the second coupling section from the environment.

[0034] Furthermore, the housing can be made of any material required. However, it is preferred when the housing is made of a plastic, a fibre-reinforced

[0035] plastic or a plastic with a steel insert. In such cases, the housing is corrosion-resistant and stable.

[0036] The gearbox can in general be an angular gearbox or a distribution gearbox, in which either the torque is deflected by a certain angle or the torque is transmitted to two or more shafts. Furthermore, the first gearbox can be arranged on a rudder propeller, Z-drive or azimuth thruster.

[0037] When the first gearbox comprises a distribution gearbox, it has been shown to be advantageous that at least one first shaft and at least two second shafts are provided, which in particular are arranged symmetrically in relation to the first shaft, and respectively with the first shaft – with regard to their axes of rotation – include an angle of 0 to 90°, preferably from 0 to 70°, preferably from 0 to 45°.

[0038] Furthermore, it is feasible that both the first shaft and the second shafts are adjustable with regard to their position in relation to each other, also in relation to the water surface, in particular also during the operation of the first gearbox.

[0039] When the first gearbox comprises an angle gearbox, it has been shown to be advantageous when it has at least one first shaft and at least one second shaft, which

with regard to their axes of rotation include an angle of 0 to 90°, preferably from 0 to 70°, preferably from 0 to 45°, with each other.

[0040] Furthermore, it can be provided that a corrosion element is arranged in the cooling and lubrication device, which comprises a metallic material, the inclination to corrosion of which is at least higher than the inclination to corrosion of at least one section of the first coupling section of the first shaft and of the second coupling section of the second shaft and/or of the first bearing and of the second bearing.

[0041] In such cases, the first bearing and/or the second bearing and the first coupling section and also the second coupling section can comprise an, in particular ferritic, steel. Due to the corrosion element, the tendency to corrosion of the gearbox parts is reduced.

[0042] The object is further attained by a second gearbox according to the invention, in particular for a watercraft, in accordance with Claim 11.

[0043] The second gearbox according to the invention can be combined with all the features of the first gearbox according to the invention, insofar as the affected elements are provided in the second gearbox according to the invention.

[0044] It is preferred that the energy device is formed by an electric engine arranged on the first shaft. It has a stator and a rotor. The rotor is formed by a section of the first shaft, wherein the stator is preferably arranged non-rotatably on the housing.

[0045] In order to cool the energy device, coolant and lubricant are guided between the rotor and the stator.

[0046] Furthermore, the object is attained by a method according to the invention for operating the first gearbox according to any one of the preceding claims, with the following steps:

- Provision of a gearbox according to the invention
- Suctioning coolant and lubricant formed by the water from the surrounding
- Filtering and cleaning the coolant and lubricant
- Applying pressure to the coolant and lubricant by means of a pump
- Feeding of the coolant and lubricant through a feed unit to a first shaft and to a second shaft, and to a first bearing and to a second bearing
- Discharging the coolant and lubricant back to the surrounding.

[0047] The water lubricated gearbox according to the invention enables lower-cost operation than that of the previously known oil-lubricated gearboxes. This is achieved on the one hand by the fact that no supply of expensive oil is required. On the other, space is gained for payloads within the watercraft that had previously been required for

storing the oil. Additionally, the gearbox according to the invention enables a construction that does not need to conform to the sealing standards of an oil-driven gearbox, since an

[0048] exit of the water used as coolant and lubricant does not lead to contamination of the environment.

[0049] Further features, details and advantages of the invention emerge from the appended patent claims and the drawing, and from the following description of an embodiment of the invention.

[0050] In the drawing:

Figure 1 shows a schematic depiction of a first embodiment of the first gearbox according to the invention;

Figure 2 shows a schematic depiction of a second embodiment of the first gearbox according to the invention.

[0051] Figure 1 shows a gearbox with reference numeral 2, which is arranged on a watercraft 4. The watercraft 4 is only shown schematically and only in an area in which the gearbox 2 is arranged.

[0052] The first gearbox 2 comprises a first shaft 6 that is connectable to an energy device 8. The energy device 8 can here comprise both a combustion engine or an electric engine, wherein the latter can be operated both mechanically and by means of a generator. The first shaft 6 is rotatably supported in a first bearing 10. The first shaft 6 has a first coupling section 12 on one end, which in the exemplary embodiment shown in the figure comprises a gearwheel.

[0053] The first gearbox 2 further has a second shaft 14 which is connected to a centrifugal machine 18 in the form of a propeller. The second shaft 14 is rotatably supported in a second bearing 16 and on its free end has a second coupling section 20 that is formed from a gearwheel. The gearwheel of the first coupling section 12 and the gearwheel of the second coupling section 20 are here designed in a complementary manner, so that the teeth of the first coupling section 12 can comb with the teeth of the second coupling section 20.

[0054] In the exemplary embodiment shown in the figure, the first coupling section 12 and the second coupling section 20 are arranged in relation to each other essentially at right-angles, so that a torque is transmittable from the energy device 8 via the first shaft 6 by means of the first coupling section 12 onto the second coupling section 20 of the second shaft 14, and as a result, onto the centrifugal machine 18 in the form of a propeller.

[0055] Furthermore, the first gearbox 2 comprises a housing 22, which with the exemplary embodiment shown shields the first coupling section 12 and the second coupling section 20 against surrounding water 24. The first bearing 10 and the second bearing 16 are supported in the housing 22. For feeding and discharging coolant and lubricant to the coupling sections 12, 20, a coolant and lubricant 28 is provided within the watercraft. The coolant and lubricant comprises surrounding water 24. At least the first coupling section 12 and/or the second coupling section 20 of the second shaft 14 and/or the first bearing 10 and/or the second bearing 16 are formed from a corrosion-resistant material or have a section with a coating that protects against corrosion.

[0056] The individual components of the first gearbox 2 will now be described in greater detail below:

In the exemplary embodiment shown in Figure 1, the first coupling section 12 and the second coupling section 20 comprise one gearwheel respectively, which is either made of corrosion-resistant material or can have a coating that protects against corrosion. In such cases, the material or the coating can comprise ceramic and/or a fibre-reinforced ceramic material and/or a corrosion-resistant hard metallic material and/or at least one rustproof steel.

Alternatively, instead of the gearwheels, screws can also be provided with one screw wheel each, which in such cases are also made of a corrosion-resistant material or have a coating as described above.

On the first coupling section 12 and on the second coupling section 20, coolant and lubricant are fed by means of the cooling and lubricating device 28. With the exemplary embodiment shown in Figure 1, the first coupling section 12 and the second coupling section 20 are entirely surrounded by coolant and lubricant. As a result, heat is transferred to the coolant and lubricant and is also discharged by them. Furthermore, between the first coupling section 12 and the second coupling section 20, a hydrodynamic carrier film is formed during operation of the first gearbox 2.

[0057] The first bearing 10 that rotatably supports the first shaft 6 and the second bearing 16 that rotatably supports the second shaft 14 also comprise either corrosion-resistant material in full or at least such a coating on their sliding bearing surface. The corrosion-resistant material can here be made of corrosion-resistant steel. This is preferably hardened or consolidated, wherein for this purpose, edge nitriding and strain hardening, in particular shot peening, are generally suitable.

[0058] The cooling and lubricating device 28 is connected to both the first bearing 10 and the second bearing 16 in such a manner that coolant and lubricant is pressable

into the sliding bearing areas. As a result, hydrodynamic lubrication is achieved. However, it is also feasible to provide a plurality of connections between cooling and lubricating devices 28 and for the first bearing 10 and for the second bearing 16, which is controllable via a control system, so that a hydrostatic carrier film is formable.

[0059] The cooling or lubricating device 28 furthermore has a suction point 30 which suctions in the surrounding water 24. The surrounding water 24 is then fed to a filter 32, where it is cleaned. The cleaning of the surrounding water 24 can here also comprise de-mineralization and de-ionization of the surrounding water 24. In order to suction out the surrounding water 24 and to supply it to the first bearing 10, the second bearing 16 and to the first coupling section 12 and the second coupling section 20 through lines 36, a pump 34 is provided that is arranged downstream of the filter 32.

[0060] With the first gearbox 2 shown in Figure 1 with the centrifugal machine 18, mechanical use and also use with a generator is feasible.

[0061] A particular advantage of the first gearbox 2 according to the invention is that no additional coolant and lubricant must be provided in the watercraft 4. Due to the fact that use can be made of the surrounding water 24, the tightness standards for the housing 22 of the gearbox 2 are very low, as a result of which the first gearbox 2 is producible in a simple manner and at a low cost.

[0062] Figure 2 shows a second gearbox 2 according to the invention, in which the energy device 8 is arranged on the first shaft 6. The energy device 8 is with the exemplary embodiment shown an electric engine, which comprises a stator 40 and a rotor 42. The rotor 42 is formed by a section on the first shaft 6. The stator 40 is non-rotatably connected to the housing 22.

[0063] The first shaft 6 is connected with its other end to the centrifugal machine 18.

[0064] The operation of the second gearbox according to the invention essentially corresponds to the operation of the first gearbox according to the invention. However, the energy generated by the energy device is not transmitted from the first shaft 6 to the second shaft 14 via coupling sections, but directly onto the centrifugal machine 18.

[0065] In order to cool the first shaft 6, the energy device 8 and the first bearing 10, coolant and lubricant is suctioned in from the surrounding via the pump 34. During this process, the coolant and lubricant is cleaned by the filter (32) and fed through lines (36).

[0066] During this process, the coolant and/or lubricant flows through the first bearing 10. Then, it is fed between the stator 40 and the rotor 42 towards the centrifugal machine 18, where it is again fed back to the surrounding.

[0067] The features of the invention disclosed in the above description, in the claims and in the drawings can be essential both individually and also in any combination required for the realization of the invention in its different embodiments.

PATENTKRAV

1. Gearkasse (2), især til et vandfartøj (4),
med mindst én første aksel (6), der er drejeligt anbragt i et første leje (10), og som kan forbindes eller er forbundet med en energiindretning (8), især en hydraulisk maskine, forbrændingsmaskine eller elektrisk maskine, som kan drives motorisk eller ved hjælp af en generator, og som har et første koblingsafsnit (12) i den ene ende,
med mindst én anden aksel (14), der er drejeligt anbragt i et andet leje (16), og som kan forbindes eller er forbundet med en rotationsmaskine (18), og som i den ene ende har et andet koblingsafsnit (20), der kan anbringes eller er anbragt med det mindst ene første koblingsafsnit (12) af den mindst ene første aksel (6) på en sådan måde, at et drejningsmoment kan overføres fra den første aksel (6) til den anden aksel (14) eller omvendt,
med et hus (22), som i det mindste understøtter det første leje (10) af den første aksel (6) og/eller i det mindste det andet leje (16) af den anden aksel (14) og i det mindste delvist omgiver koblingsafsnittene (12, 20),
med en køle- og smøreindretning (28) til tilførsel og bortledning af køle- og smøremiddel til koblingsafsnittene (12, 20) og til lejerne (10, 16) og til den første aksel (6) og til den anden aksel, hvor køle- og smøremidlet omfatter omgivelsesvand (24),
kendetegnet ved, at
den første aksel (6) og den anden aksel samt det første koblingsafsnit (12) af den første aksel (6) og det andet koblingsafsnit (20) af den anden aksel (14) samt det første leje (10) og det andet leje (16) hver især i det mindste i et afsnit er dannet af mindst ét korrosionsbestandigt materiale eller omfatter et sådant materiale,
hvor køle- og smøreindretningen (28) har en fødeenhed (36) omfattende mindst én pumpe (34), med hvilken køle- og smøremidlet (26) kan transporteres til eller mellem kontaktfladerne af det første koblingsafsnit (12) og det andet koblingsafsnit (20) og glidelejefladerne på det første leje (10) og det andet leje (16) til hydrostatisk eller hydrodynamisk smøring,
hvor køle- og smøreindretningen har et sugested (30), som suger omgivelsesvand (24) ind, hvor omgivelsesvandet (24) kan føres til et filter (32) og kan rengøres i dette, og hvor pumpen (34) er tilvejebragt for at suge omgivelsesvandet (24) ind og for at tilføre det til det første leje (10), det andet leje (16) samt det første koblingsafsnit (12) og det andet koblingsafsnit (20) gennem ledninger (36).

2. Gearkasse (2) ifølge krav 1, kendetegnet ved, at det korrosionsbestandige materiale omfatter keramik eller mindst ét fiberforstærket keramisk materiale eller mindst ét rustfrit stål, især austenitisk stål.

3. Gearkasse (2) ifølge krav 1 eller 2, kendetegnet ved, at det første koblingsafsnit (12) og det andet koblingsafsnit (20) hver især omfatter mindst ét tandhjul, der er dannet af eller omfatter keramik eller mindst ét fiberforstærket keramisk materiale eller mindst ét rustfrit stål, især austenitisk stål.

4. Gearkasse (2) ifølge ét eller flere af de foregående krav, kendetegnet ved, at den første aksel (6) og den anden aksel og/eller det første leje (10) og det andet leje (16) hver især i mindst ét afsnit har mindst ét overtræk, der beskytter mod korrosion, og som omfatter keramik eller mindst ét fiberforstærket keramisk materiale eller mindst ét rustfrit, især austenitisk, stål.

5. Gearkasse (2) ifølge krav 1, 2 eller 4, kendetegnet ved, at det første koblingsafsnit (12) og det andet koblingsafsnit (20) hver især omfatter mindst én snekke med henholdsvis mindst ét snekkehjul, hvor snekken har mindst én belægning på mindst én tandflanke af mindst ét snekkehjul, som er fremstillet af keramik eller af mindst ét fiberforstærket keramisk materiale eller af mindst ét rustfrit stål, især austenitisk stål.

6. Gearkasse (2) ifølge ét eller flere af de foregående krav, kendetegnet ved, at det første koblingsafsnit (12) og det andet koblingsafsnit (20) og det første leje (10) og det andet leje (16) omfatter et rustfrit stål, især austenitisk stål, der er hærdet eller konsolideret, især ved nitrering, kantnitridering eller koldhærdning, især kuglestråling.

7. Gearkasse (2) ifølge ét eller flere af de foregående krav, kendetegnet ved, at det første leje (10) og/eller det andet leje (16) omfatter et glideleje, som er fremstillet af plast, gummi, bronze eller rustfrit stål, især austenitisk stål.

8. Gearkasse (2) ifølge ét eller flere af de foregående krav, kendetegnet ved, at huset (22) er fremstillet af plast, fiberforstærket plast og/eller plast med stålindsats.

9. Gearkasse (2) ifølge ét eller flere af de foregående krav, kendetegnet ved, at et korrosionselement er anbragt i køle- og smøreindretningen (28), som omfatter et metallisk

materiale, hvis tilbøjelighed til korrosion i det mindste er højere end tilbøjeligheden til korrosion af mindst ét afsnit af den første aksel (6) og den anden aksel og det første leje (10) og det andet leje (16).

10. Gearkasse (2) ifølge krav 9, kendetegnet ved, at korrosionselementet omfatter et ferritisk materiale.

11. Gearkasse (2), især til et vandfartøj (4),
med mindst én første aksel (6), der er drejeligt anbragt i et første leje (10), og som på den ene side kan forbindes eller er forbundet med en energiindretning (8), især en hydraulisk maskine, forbrændingsmaskine eller elektrisk maskine, som kan drives motorisk eller ved hjælp af en generator, og som på den anden side kan forbindes eller er forbundet med en rotationsmaskine (18),
med et hus (22), der understøtter og i det mindste delvist omgiver i det mindste det første leje (10) af den første aksel (6),
med en køle- og smøreindretning (28) til tilførsel og bortledning af køle- og smøremiddel til det første leje (10) og til den første aksel (6), hvor køle- og smøremidlet omfatter omgivelsesvand (24),
kendetegnet ved, at
den første aksel (6) og det første leje (10) hver især i det mindste i ét afsnit er dannet af mindst ét korrosionsbestandigt materiale eller omfatter et sådant materiale,
hvor køle- og smøreindretningen (28) har en fødeenhed (36) omfattende mindst én pumpe (34), med hvilken køle- og smøremidlet (26) kan transporteres til glidelejefladerne af det første leje (10) til hydrostatisk eller hydrodynamisk smøring,
hvor køle- og smøreindretningen har et sugested (30), der suger omgivelsesvand (24) ind, hvor omgivelsesvandet (24) kan føres til et filter (32) og kan rengøres i dette, og hvor pumpen (34) er tilvejebragt for at suge omgivelsesvandet (24) ind og for at tilføre det til det første leje (10) gennem en ledning (36).

12. Fremgangsmåde til at drive en gearkasse (2) ifølge et hvilket som helst af kravene 1 til 10, med følgende trin:

indsugning af køle- og smøremiddel, som er dannet af omgivelsesvand (24), fra omgivelserne,

filtrering og rengøring af køle- og smøremidlet,

påføring af køle- og smøremidlet med tryk ved hjælp af pumpen,

tilførsel af køle- og smøremidlet gennem fødeenheden til den første aksel (6) og til den anden aksel (14) og til det første leje (10) og til det andet leje (16), og

bortledning af køle- og smøremidlet tilbage til omgivelserne.

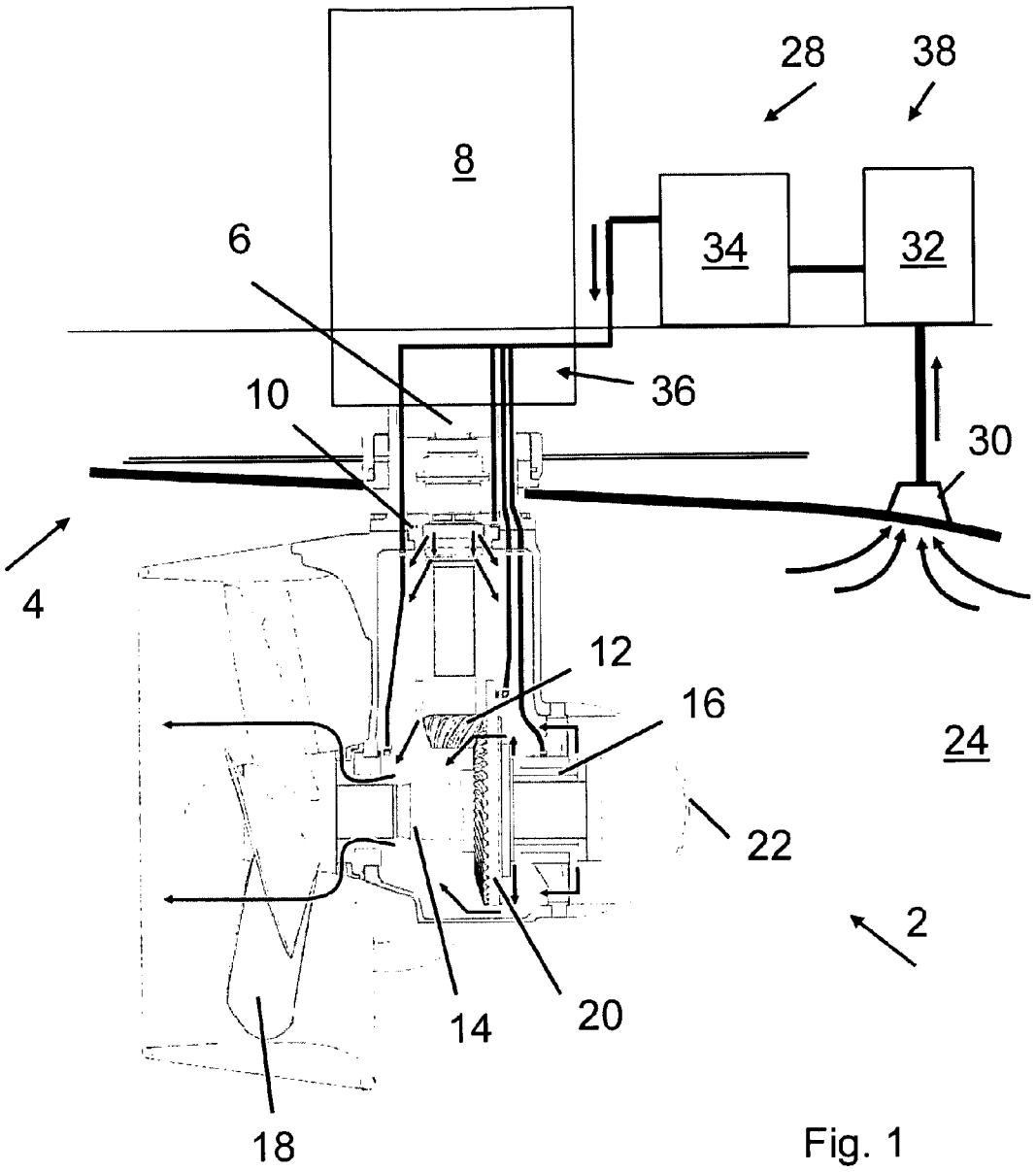

Fig. 1

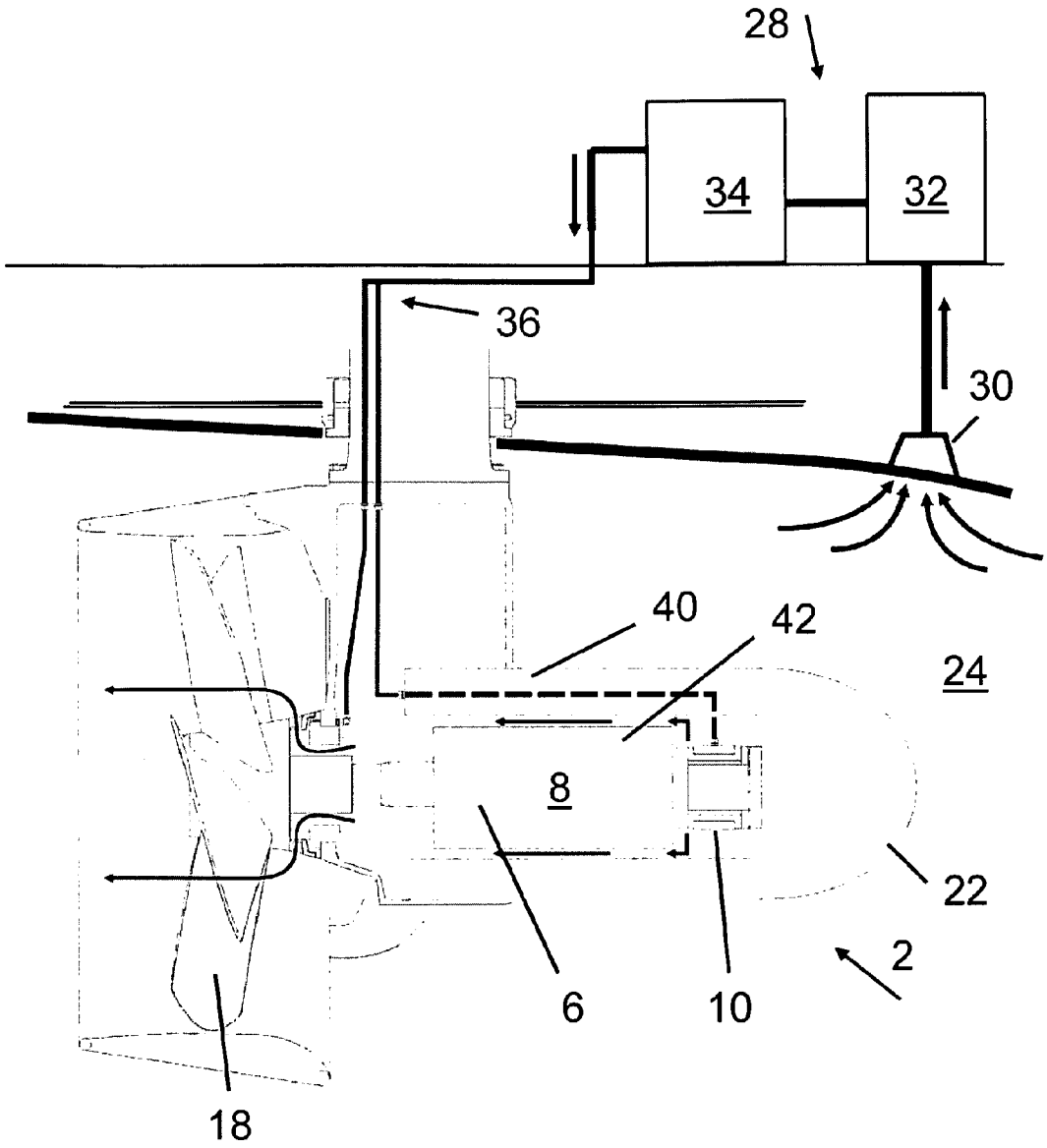

Fig. 2