Sept. 18, 1934. J. D. SPILLANE 1,974,126

WEB ROLL CONTROLLING MECHANISM FOR PRINTING MACHINES

Filed July 16, 1931 5 Sheets-Sheet 1

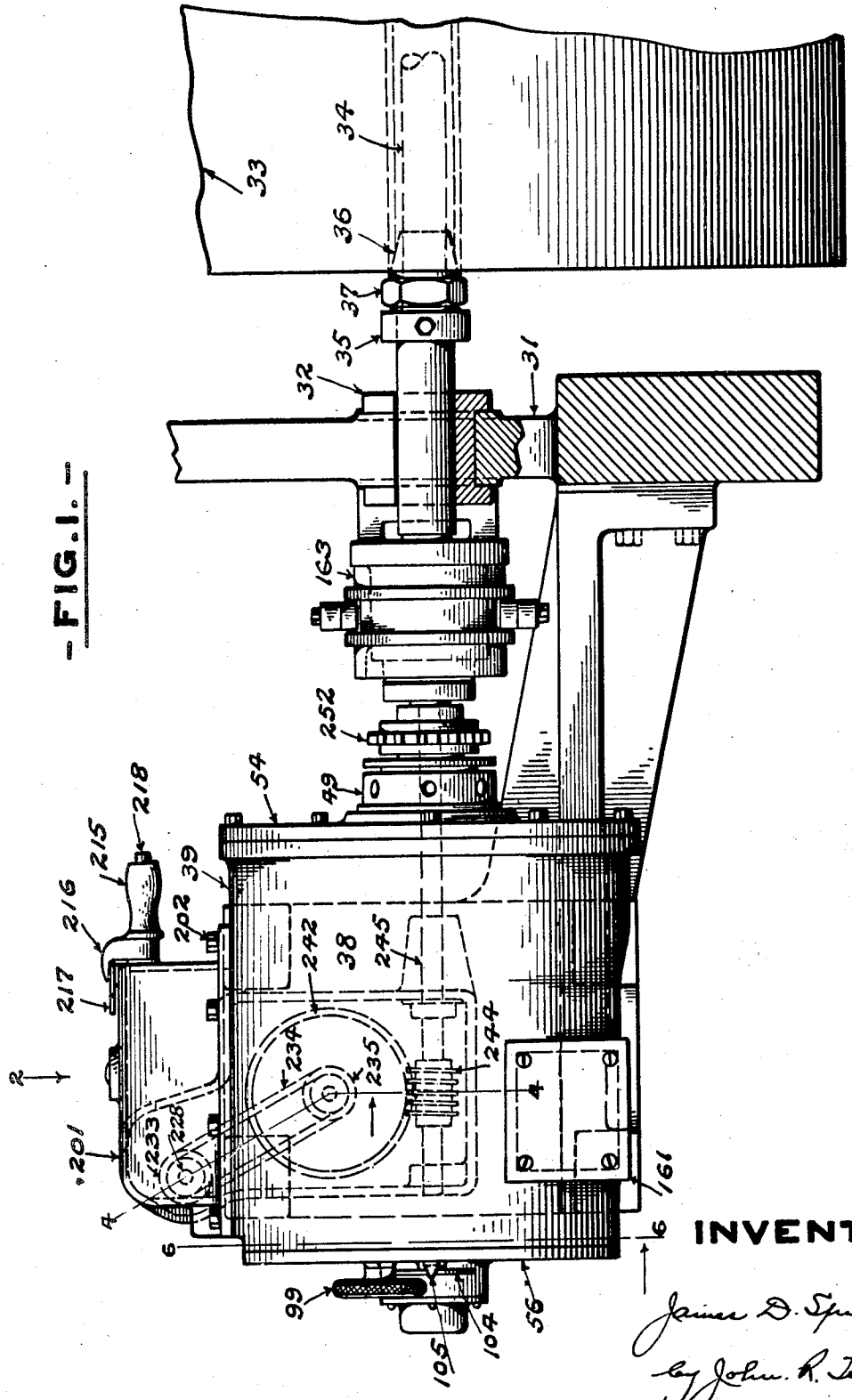

FIG. 1.

INVENTOR.

James D. Spillane

By John R. Jansen

Atty

Sept. 18, 1934. J. D. SPILLANE 1,974,126

WEB ROLL CONTROLLING MECHANISM FOR PRINTING MACHINES

Filed July 16, 1931 5 Sheets-Sheet 2

-FIG. 3.-

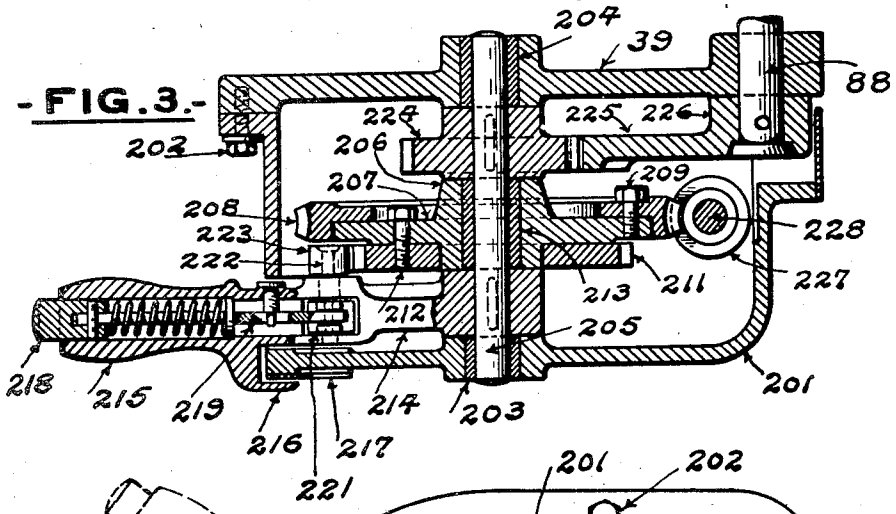

-FIG. 2.-

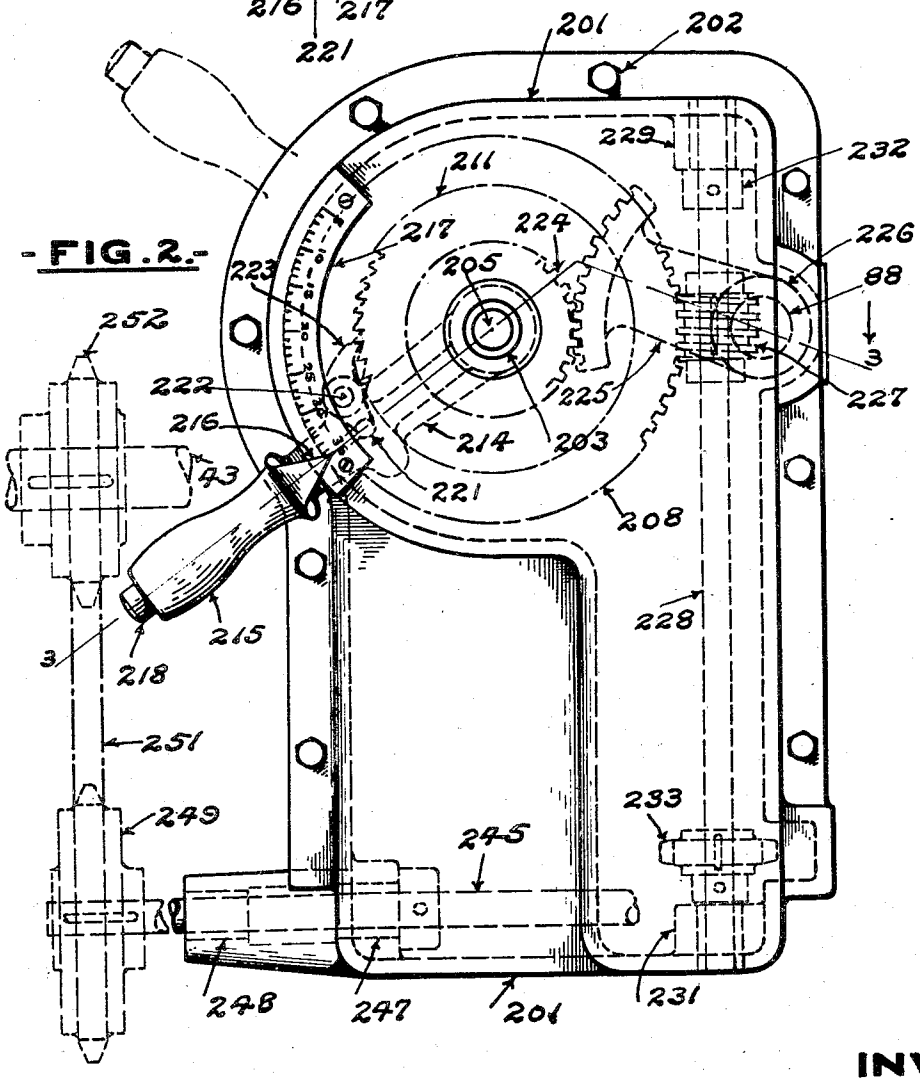

INVENTOR

James D. Spillane

by John R. Townsend

Atty

Sept. 18, 1934. J. D. SPILLANE 1,974,126

WEB ROLL CONTROLLING MECHANISM FOR PRINTING MACHINES

Filed July 16, 1931 5 Sheets-Sheet 3

- FIG. 4. -

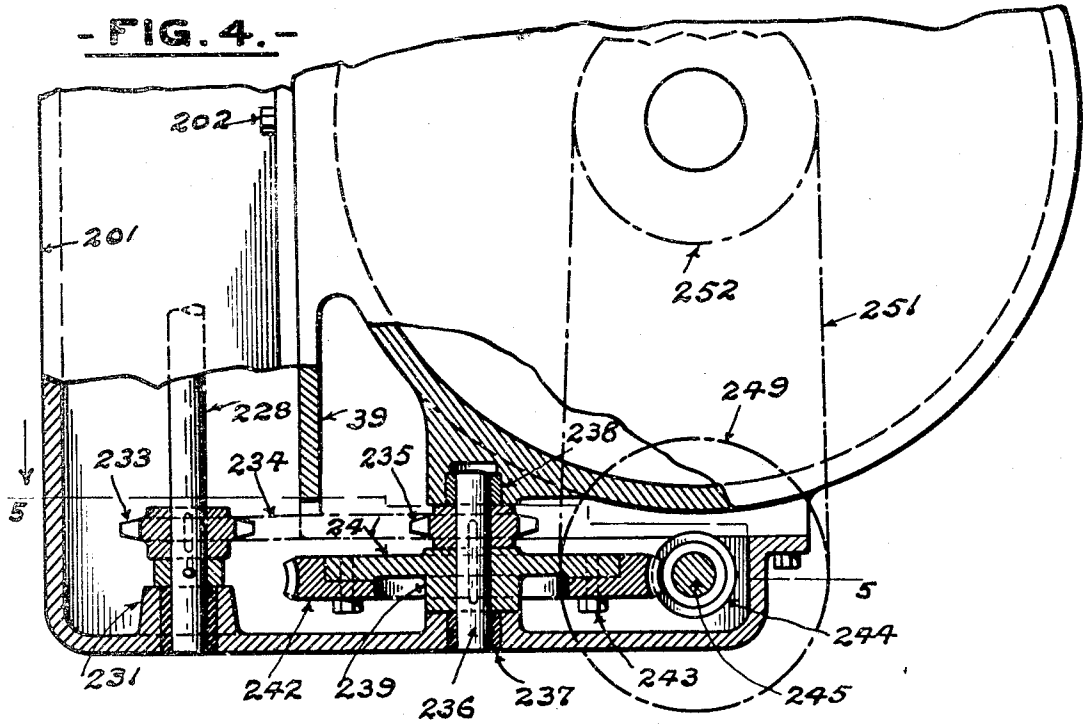

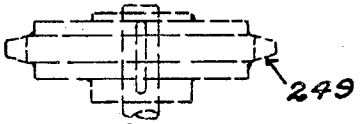

- FIG. 5. -

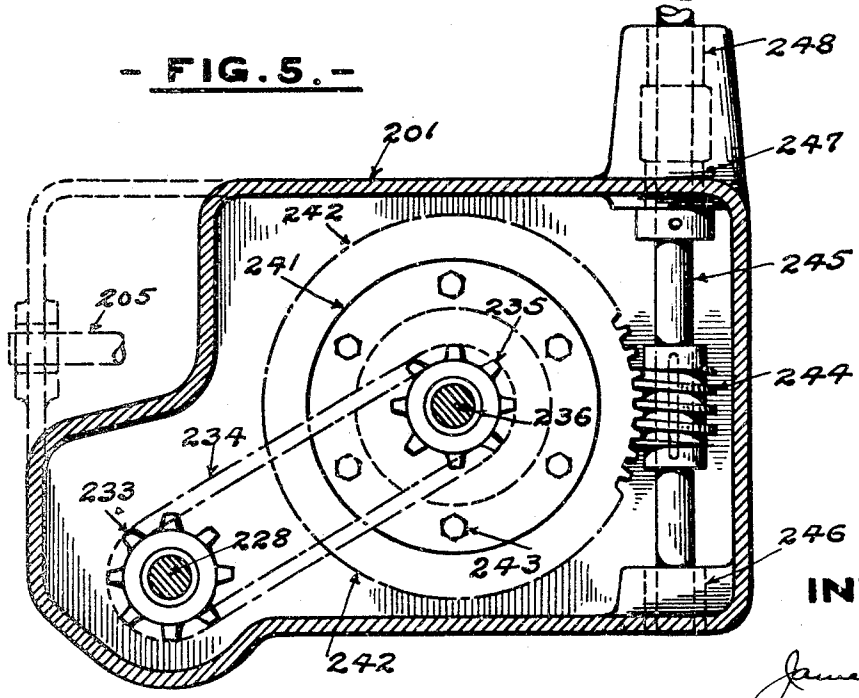

INVENTOR

James D. Spillane

by John R. Townsend

ATT'Y

Sept. 18, 1934. J. D. SPILLANE 1,974,126

WEB ROLL CONTROLLING MECHANISM FOR PRINTING MACHINES

Filed July 16, 1931 5 Sheets-Sheet 4

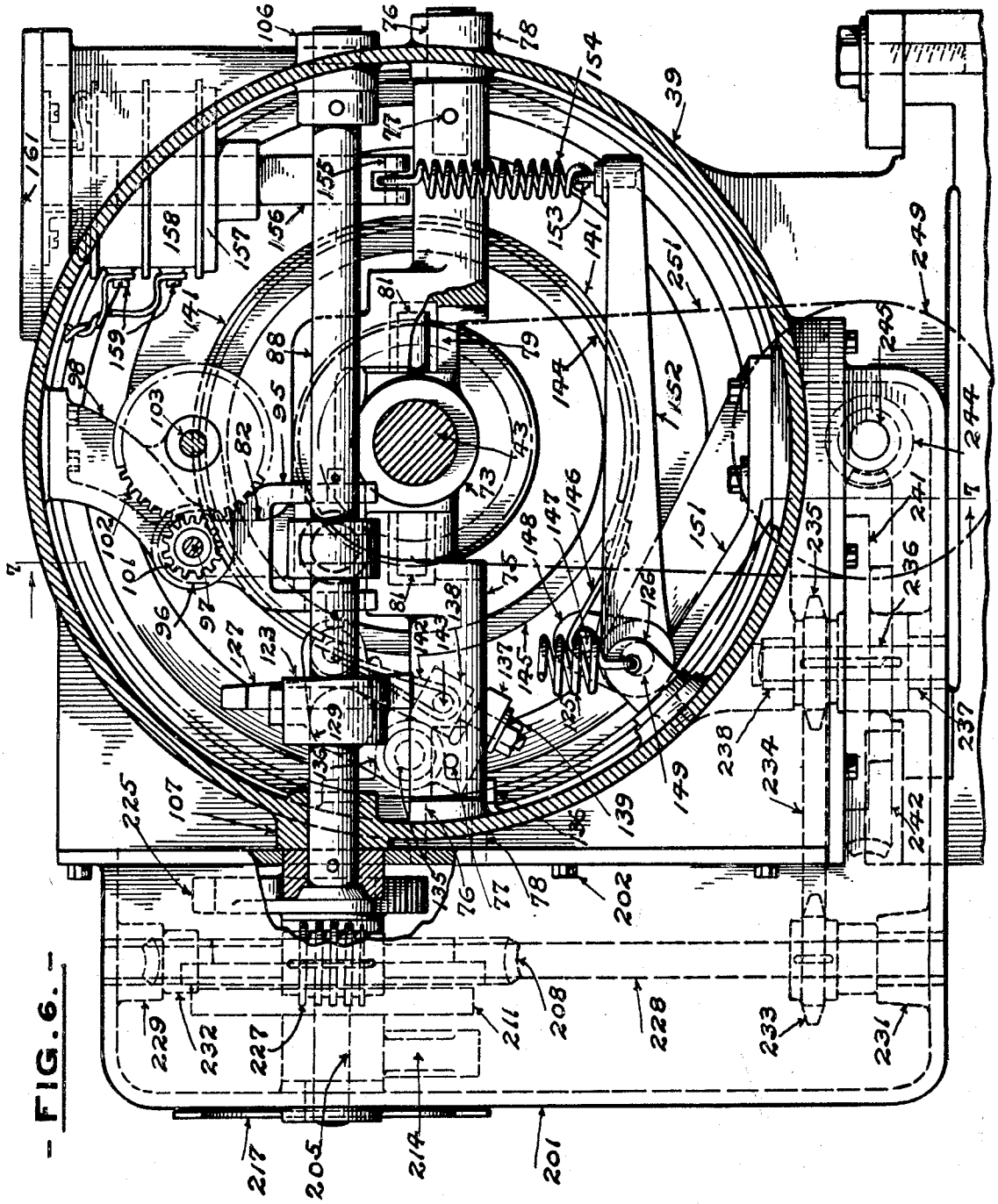

FIG. 6.

INVENTOR

James D. Spillane

By John R. Jamein

ATT'Y

Sept. 18, 1934. J. D. SPILLANE 1,974,126

WEB ROLL CONTROLLING MECHANISM FOR PRINTING MACHINES

Filed July 16, 1931 5 Sheets-Sheet 5

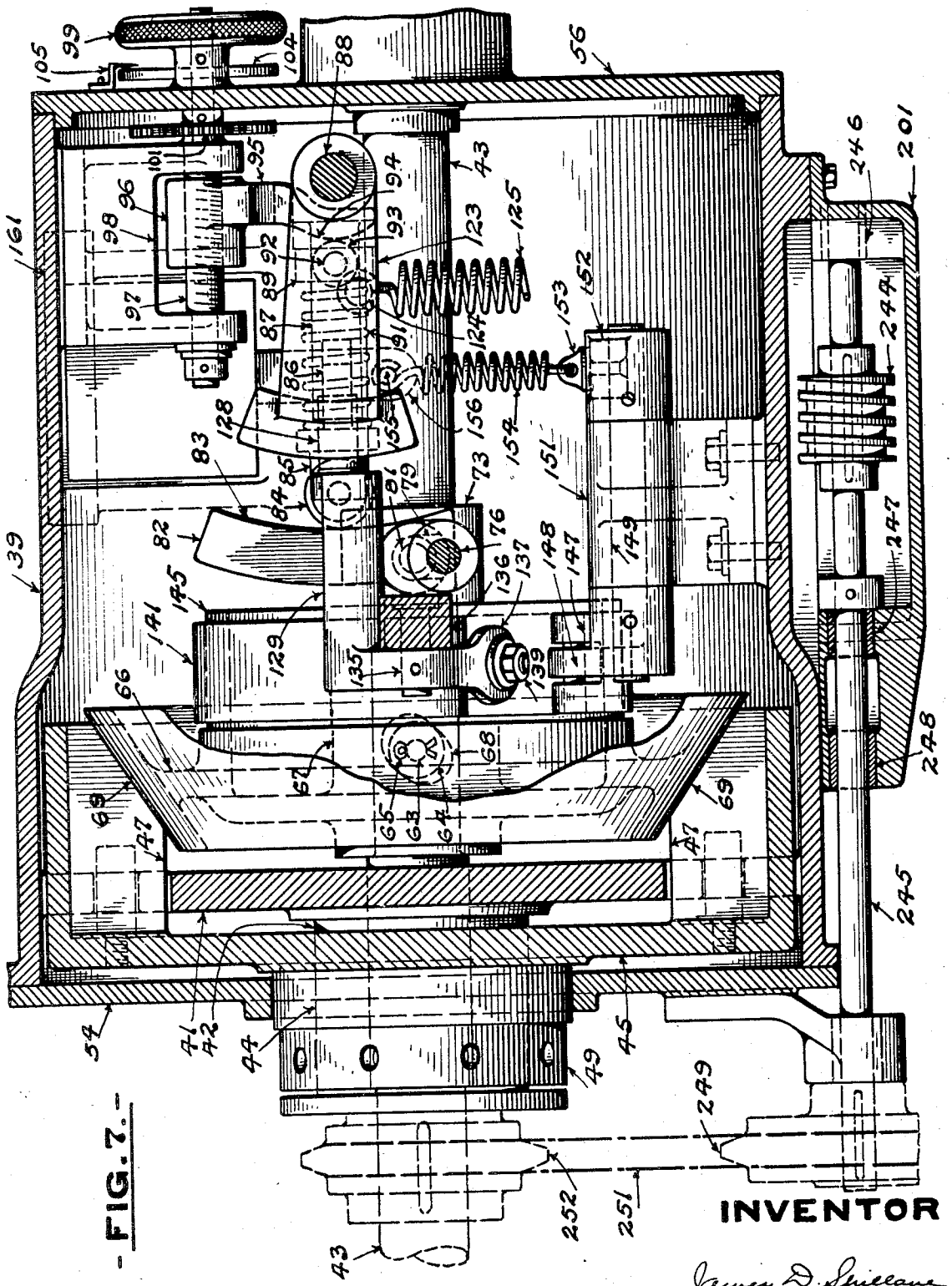

FIG. 7.

INVENTOR

James D. Spillane

by John R. Townsin

ATT'Y

Patented Sept. 18, 1934 1,974,126

UNITED STATES PATENT OFFICE

1,974,126

WEB ROLL CONTROLLING MECHANISM FOR PRINTING MACHINES

James D. Spillane, New York, N. Y., assignor to R. Hoe & Co., Inc., New York, N. Y., a corporation of New York; Irving Trust Company, temporary trustee

Application July 16, 1931, Serial No. 551,082

8 Claims. (Cl. 242—75)

This invention relates to mechanism for controlling the rotation of a roll from which a web is fed to a machine by which it is printed or otherwise operated upon. It is necessary to maintain a certain degree of tension on the web and this is preferably accomplished by the application of a braking action to the rotating roll. A considerable portion of the mechanism shown in the drawings is disclosed and claimed in a pending application filed in the United States Patent Office on December 30, 1930, Serial No. 505,551, now Patent No. 1,930,733, dated October 17, 1933. The present application constitutes an improvement on the device disclosed in the earlier application in that it provides an improved means for automatically reducing the tension applied to the web roll as the diameter of the roll decreases while it is being unwound.

An object of the invention herein disclosed is to provide a regulating means for a web roll controlling mechanism that will act to vary the braking action as the roll decreases in size.

Another object of the invention is to provide a regulating mechanism for reducing the brake tension that will be actuated by the rotation of the roll.

Another object is to provide a regulating mechanism that can be manually adjusted for rolls of varying diameter and that will thereafter act to regulate the braking action as the roll decreases in size.

It is also an object of the invention to provide a brake regulating mechanism of generally improved construction, whereby the device will be simple, durable and inexpensive in construction, as well as convenient, practical, serviceable and efficient in its use.

With the foregoing and other objects in view, which will appear as the description proceeds, the invention resides in the combination and arrangement of parts, and in the details of construction hereinafter described and claimed, it being understood that various changes in the precise embodiment of the invention herein disclosed may be made within the scope of what is claimed without departing from the spirit of the invention.

The preferred embodiment of the invention is illustrated in the accompanying drawings, wherein:

Figure 1 is a plan view showing a portion of the frame of a printing machine with a web roll broken away and a tension device to which the regulating mechanism that is the subject of the present invention is applied;

Figure 2 is a front view of the regulating mechanism as seen in the direction of arrow 2 of Figure 1;

Figure 3 is a sectional view of the regulating mechanism as shown on the broken line 3—3 of Figure 2 and in the direction of the arrow;

Figure 4 is a view partly broken away and partly in section showing the regulating mechanism as seen on the broken line 4—4 of Figure 1, in the direction of the arrow;

Figure 5 is a sectional veiw of the mechanism as seen on the broken line 5—5 of Figure 4 and in the direction of the arrow;

Figure 6 is a view partly in section and partly broken away showing a tension device and the regulating mechanism as seen on the line 6—6 of Figure 1; and

Figure 7 is an internal view of a tension device partly in section as seen on the irregular line 7—7 of Figure 6 and in the direction of the arrow.

Referring to the drawings, 31 indicates a portion of the main frame of a printing machine having an open bearing indicated at 32. A web roll from which a web is fed to the press is shown broken away at 33. These rolls as is generally known, are wound on hollow cores, and in practice may be supported on spindles for unwinding. A spindle is indicated at 34 and is provided with a collar 35, which is locked to the spindle, and a tapering sleeve 36, which is forced into the core by the adjusting nut 37. It will be understood that a similar construction is used at the other end of the roll that is not shown, and means are thus provided for rotatably supporting the roll so that it may be unwound to feed a web to the printing machine.

Mechanism for resisting the rotation of the roll in order to produce a proper tension on the web as it is fed to the machine, is provided by a braking mechanism indicated generally at 38 in Figure 1, and consists of a cylindrical housing or body 39, having a web 41, as shown in Figure 7. The web carries a hub 42, that is bored to form a bearing for a shaft 43, that is rotated by the roll as will be hereinafter explained. The outside of the hub 42 is turned to form a seat at 44, on which a brake block holder 45 is slidably fitted. Brake blocks 47 are secured to the holder 45 and project through openings in the web 41, and the blocks are thus prevented from turning. The outer end of the hub 42 is provided with an adjusting collar 49, by means of which the setting of the brake block holder may be varied. A cover plate 54 is fitted over the brake block holder 45 and is suitably secured to the housing 39. An

end plate 56 is similarly secured to the opposite end of the housing 39 and is bored at the center to form a bearing for the shaft 43. The shaft 43 is drilled to receive an axle 63, which rotatably supports a pair of rollers at the opposite sides of the shaft. One of these rollers is indicated at 64, and pins 65 are provided to hold them in place. A brake wheel 66 is formed with a hub 67, that is loosely fitted to the shaft 43, and two diagonal slots as indicated at 68 in Figure 7, are formed in the hub 67, and arranged to engage with the rollers 64. It will be understood that any relative rotary motion between the brake wheel 66 and the shaft 43 on their common axis, will result in moving the rollers in the slots, and causing axial motion of the brake wheel, this motion being utilized to affect the pressure between the brake blocks 47 and a brake face 69, that is formed on the brake wheel 66. A thrust member 73 is fitted loosely on the shaft 43 and provided with a suitable thrust bearing, and a yoke 75 is bored at the ends to receive pivot pins 76 which are secured in place by means of pins 77.

The pins 76 are best shown in Figure 6, and have bearings in bosses 78 formed in the housing 39. Slots 79 are formed in the yoke 75 and are fitted to engage with trunnions 81, that are formed on the collar of the thrust member 73. The yoke 75 is formed with a brake lever 82 having an arcuate face 83. A pressure actuated member which is preferably made in the form of a roller as indicated at 84 and best shown in Figure 7, is carried in a roller holder 85, formed with a stem 86 that is slidably supported in the bore of a tubular lever 87, which is secured to a shaft 88. A collar 89 is loosely fitted to the tubular lever 87 and serves as an abutment for one end of a spring 91, the other end of which presses against the head of the roller holder 85 and acts to press the roller 84 against the brake lever 82, thus acting to press the brake face 69 against the brake blocks 47 and thereby resist the rotation of the roll. The roller 84 being adjustable along the brake lever 83, constitutes a variable leverage connection for controlling the pressure on the brake wheel 66.

The collar 89 is provided with trunnions 92, which rotatably support rollers 93. These rollers are engaged by the arcuate surfaces 94, of a bifurcated tension adjusting arm 95, having a boss 96, that is threaded internally to engage a threaded shaft 97, rotatably supported in bearings formed in a bracket 98, that is secured to the housing 39. The shaft 97 is extended through the end plate 56, and provided with a hand wheel 99. It will be understood that by turning the hand wheel, the tension adjusting arm 95 will act to move the collar 89 along the lever 87, and thus vary the pressure exerted through the spring 91 and the roller 84, against the brake lever 82. The arcuate surfaces 94 are formed approximately concentric with the shaft 88, and it will be seen that the lever 87 may be turned to move the roller 84 along the surface 83.

As shown in Figure 6, a pinion 101 is secured to the shaft 97 and meshes with a gear 102, secured to a shaft 103. This shaft is extended through the end plate 56 and carries on its outer end, a tension indicator 104, shown in Figure 7, which may be calibrated to indicate the tension in pounds that is exerted on the web. A cooperating index 105, is secured to the cover plate 56.

Bearings for the shaft 88 are provided in bosses formed in the housing 39, and indicated at 106 and 107, in Figure 6. An arm 123, that is shown in Figures 6 and 7 is secured to the shaft 88. This arm carries a boss 124, that engages one end of a tension spring 125, the other end of which is hooked to a spring anchor 126, secured to the housing 39. This spring tends to turn the shaft 88 in a counter clockwise direction as shown in Figure 7. The arm 123 is extended to form a cam surface 127, which engages with a roller 128. The roller is rotatably supported on a brake anchorage member, best shown in Figure 7 and indicated generally with the numeral 129. The brake anchorage member is secured to a pin 135, that is rotatably supported in a bearing formed in a bracket 136 that is secured to the housing 39. The brake anchorage member is formed with a bracket 137, adapted to receive a brake anchor fitting 138, having a threaded stem which passes through the bracket 137, and is secured by the nut 139.

An auxiliary brake consists of a brake band 141, having a loop 142, which engages a pin 143, secured to the brake anchor fitting 138, and is preferably provided with a brake lining of suitable material indicated at 144. The brake band engages a brake sheave 145, formed on the brake wheel 66. The other end of the brake band is formed with a loop 146, and engages the pin 147, carried by an arm 148, secured to a shaft 149, rotatably supported in a bearing formed in a bracket 151, that is secured to the housing 39. An arm 152 is also secured to the shaft 149, and carries a spring anchor 153, to which one end of the spring 154 is secured, while the other end is secured by a pin 155, held in a plunger 156, of a solenoid magnet having a frame 157, and a winding 158, the leads of which are brought out to terminals 159. The frame of the solenoid is secured to a plate 161 that is suitably fastened to the housing 39. It will be seen that when the solenoid is energized, the pull of the plunger will be communicated through the spring 154 and the lever 152 will act to tighten the brake band on the sheave 145. It will also be seen that the position of the anchor fitting 138 is altered by rotation of the shaft 88 and the effectiveness of the auxiliary brake thereby controlled.

The winding of the solenoid is connected through a circuit, not shown, in such manner that it is energized when the roll is to be stopped quickly. When the printing machine is driven by a direct current motor, the solenoid may be connected across the terminals of a dynamic brake resistance or it may be connected in one of a number of different ways through relays or to one of the switches of the controller for the motor that operates the machine. Preferably, it will be connected in such manner that when an emergency stopping button is operated, the solenoid will act to apply the brake and hold it until the machine stops or has decelerated to a point where it is practical to release the emergency brake without permitting the roll to unwind excess web.

A clutch for connecting the shaft 43 of the tension mechanism with the spindle or gudgeon on which the roll is supported is indicated generally by the numeral 163 in Figure 1, but as this forms no part of the present invention, it is unnecessary to describe it in detail.

The improved regulating mechanism is arranged in a housing 201 that is secured to the cylindrical housing 39 of the tension device, by means of screws 202. The housing 201 and the housing 39 carry bushings 203 and 204 which rotatably support a shaft 205. The hub 206 is

formed with a flange 207, to which a worm ring 208 is secured by screws 209. A ratchet wheel 211 is also secured to the flange 207 by screws 212. The hub 206 is provided with a bushing 213, which is loose on the shaft 205.

A lever 214 is secured to a shaft 205 and extends through a slot in the housing 201 and terminates in a handle 215. A pointer 216 is provided on the handle which cooperates with index plate 217 secured to the housing 201 as shown in Figure 2.

The handle 215 is bored to receive a plunger 218, that is connected to a rod 219. The rod is pivotally connected to a pawl member 221, that is pivoted on a pin 222, and having a pawl 223, that engages with the ratchet wheel 211.

A gear 224 is also secured to the shaft 205 and meshes with a segmental lever 225 having a hub 226, that is secured to the shaft 88.

The worm ring 208 meshes with worm 227, secured to a shaft 228, that is rotatably supported in bearings 229 and 231 carried by the housing 201. A thrust collar 232 and a sprocket wheel 233 are both secured to the shaft 228. The sprocket 233, as indicated in Figures 4 and 5, is connected by a chain 234 with a similar sprocket 235 secured to a shaft 236, rotatably supported in a bearing 237, carried in the casing 201, and a bearing 238, carried in the housing 39. The hub 239 is also secured to the shaft 236 and is formed with a flange 241 to which a worm ring 242 is secured by screws 243. The worm ring 242 meshes with a worm 244, secured to a shaft 245, rotatably supported in bearings 246, 247 and 248, formed in the housing 201. A sprocket 249 is secured to an extended portion of the shaft 245 and is connected by a chain indicated at 251 in Figure 4 with a sprocket wheel indicated at 252.

It will be understood that the rotation of the web roll results in rotating the shaft 43 which is connected to it by means of the coupling 163, and the sprocket 252 will thus be rotated and in turn rotate the shaft 245 by means of the chain connection. The worm gear on this shaft will drive the worm ring 242, and the chain 234 will rotate the shaft 228. The shaft 228 also carries a worm 227 which acts on the worm ring 208 to rotate the ratchet wheel 211.

The shaft 88 is biased in a counter clockwise direction by the spring 125 and it will be seen that a bias in a clockwise direction is imposed on the shaft 205 by the segment arm 225 acting on the gear 224. The arm 214 being connected to the shaft 205, it will be understood that the spring 125 will constantly tend to rotate the handle 215 in a clockwise direction. This action is resisted by the pawl 223 which engages the ratchet wheel 211, and in consequence the arm 214 is permitted to move in a clockwise direction very slowly as the roll unwinds.

From the foregoing description, it will be seen that when the roll is rotated to feed the web to the printing machine, the initial motion of the roll turns the shaft 43 of the tension mechanism and with it the rollers 64. These act on the cam slots in the brake wheel 66 tending to move the brake face 69 out of engagement with the brake blocks 47, against which it is normally pressed by the action of the spring 91. It will be understood that thus reducing the brake pressure allows the roll to start without excessive resistance and the tension on the web is maintained constant. The value of this tension can be adjusted by turning the hand wheel 99, and as the roll is rotated for unwinding, the regulating mechanism disclosed herein acts to move the brake thrust roller along the brake lever 82, toward the adjacent trunnion 81, thus reducing the effect of the spring 91 and allowing the roll to rotate more freely, the mechanism being arranged to produce a substantially constant tension on the web throughout the unwinding operation.

The regulating mechanism shown herein also varies the action of the emergency brake in a similar manner and it will be seen that if the emergency brake is applied to a full roll, it acts to cause a greater brake pressure than when it is applied to a small roll so that the effective pressure to be applied is varied to suit the diameter of the roll.

Hence, sufficient pressure will be applied to a large diameter roll to stop it without unwinding excess web and the pressure applied to a small roll will not tend to decelerate it so quickly as to cause excessive stress on the web.

By pressing on the plunger 218, the pawl 223 may be released from the ratchet wheel 211 and the handle 215 moved to any desired position. The index plate 217 is preferably calibrated with figures corresponding to the diameter of the web rolls and the pointer 216 will be set opposite the figure on the dial corresponding to the size of the roll in use. Thus, when starting with a 36" diameter roll, the handle will be set at 36, or starting with any smaller roll, the handle will be set to the corresponding position, and thereafter, the rotation of the roll will act to move the handle and with it the brake controlling mechanism to correspond with the changing diameter of the roll as it is unwound.

It will be seen that a mechanism has been provided for regulating a braking device used for controlling an unwinding roll in such manner that a uniform tension will be produced on the web from the start to the finish of the unwinding operation, and the regulation is simultaneously effective to control the extent of a separate braking action used for an emergency stop, the braking pressure being varied to suit the diameter of the roll.

What I claim is:

1. In a device for controlling the rotation of an unwinding web roll and maintaining a substantially equal tension on the web when the roll is starting and while it is running, a braking device having a braking member rotatable with the roll and adapted to resist rotation of the roll, means operable by relative rotation between the roll and braking device to reduce the static friction of the braking device when the roll is started, and means operated by rotation of the roll for reducing the effectiveness of the braking device as the diameter of the roll diminishes.

2. In a device for controlling the rotation of an unwinding roll, a first braking device having a braking member rotatable with the roll and adapted to resist rotation of the roll under normal operating conditions, a second braking device adapted to apply greater resistance to the rotation of the roll when it is to be stopped quickly, and means operated by rotation of the roll for regulating the action of both braking devices.

3. In a device for controlling the rotation of an unwinding roll, a first braking device having a braking member rotatable with the roll and adapted to resist rotation of the roll under normal operating conditions, a second braking device adapted to apply greater resistance to the rotation of the roll when it is to be stopped quickly, and means actuated by rotation of the roll

for reducing the effectiveness of both braking devices as the diameter of the roll diminishes.

4. In a device for controlling the rotation of an unwinding web roll and maintaining a substantially equal tension on a web when the roll is starting and while it is running, a first braking device having a braking member rotatable with the roll and adapted to resist rotation of the roll under normal running conditions, means to reduce the static friction of the said braking device when the roll is started, a second braking device adapted to apply greater resistance to the rotation of the roll when it is to be stopped quickly, and means operated by rotation of the roll for reducing the effectiveness of both braking devices as the diameter of the roll diminishes.

5. In a device for controlling the rotation of an unwinding roll, a braking device operably connected with the roll, a lever operably connected with the braking device, means operably engaging the lever for initially imparting braking stress to the braking device through the intermediation of the lever, and means actuated by the rotation of the unwinding roll for varying the braking action of the braking device by changing the leverage ratio between the said braking stress imparting means and the brake without varying the initial braking stress.

6. In a device for controlling the rotation of an unwinding roll, a braking device operably connected with the roll, a lever operably connected with the braking device, means operably engaging the lever for initially imparting braking stress to the braking device through the intermediation of the lever, means actuated by the rotation of the unwinding roll for varying the braking action of the braking device by changing the leverage ratio between the said braking stress imparting means and the brake without varying the initial braking stress, and manually operable means for adjustably varying the initial braking stress.

7. In a device for controlling the rotation of an unwinding roll, a braking device operably connected with the roll, a lever operably connected with the braking device, a spring constructed and arranged to impart braking stress to the braking device through the intermediation of the lever, and means actuated by the rotation of the unwinding roll for varying the braking action of the braking device by changing the leverage ratio between the spring and the braking device without varying the spring stress.

8. In a device for controlling the rotation of an unwinding roll, a braking device operably connected with the roll, a lever operably connected with the braking device, a spring constructed and arranged to impart braking stress to the braking device through the intermediation of the lever, means actuated by the rotation of the unwinding roll for varying the braking action of the braking device by changing the leverage ratio between the spring and the braking device without varying the spring stress, and manually operable means for adjustably varying the spring stress.

JAMES D. SPILLANE.