(19) SUOMI - FINLAND
(FI)

PATENTTI- JA REKISTERIHALLITUS
PATENT- OCH REGISTERSTYRELSEN
FINNISH PATENT AND REGISTRATION OFFICE

(10) **FI/EP4430933 T3**

(12) **EUROOPPAPATENTIN KÄÄNNÖS**
ÖVERSÄTTNING AV EUROPEISKT PATENT
TRANSLATION OF EUROPEAN PATENT SPECIFICATION

(45) Käännöksen kuulutuspäivä - Kungörelsedag av översättning - Translation available to the public **10.06.2025**

(97) Eurooppapatentin myöntämispäivä - Meddelandedatum för det europeiska patentet - Date of grant of European patent **26.03.2025**

(51) Kansainvälinen patenttiluokitus - Internationell patentklassificering - International patent classification
H10N 30/073 (2023 . 01)
H10N 30/082 (2023 . 01)
H10N 30/086 (2023 . 01)

(96) Eurooppapatenttihakemus - Europeisk patentansökan - European patent application EP22797411.0

(22) Tekemispäivä - Ingivningsdag - Filing date **28.09.2022**

(97) Patenttihakemuksen julkiseksitulopäivä - Patentansökans publiceringsdag - Patent application available to the public **18.09.2024**

(86) Kansainvälinen hakemus - Internationell ansökan - International application **28.09.2022 PCT/FR2022051837**

(30) Etuoikeus - Prioritet - Priority

10.11.2021 FR FR2111960

(73) Haltija - Innehavare - Holder

1• SOITEC , Parc Technologique des Fontaines Chemin des Franques , 38190 Bernin , (FR)

(72) Keksijä - Uppfinnare - Inventor

1• BELHACHEMI, Djamel , 38190 BERNIN , (FR)
2• CAULMILONE, Raphaël , 38190 BERNIN , (FR)
3• HUYET, Isabelle , 38190 BERNIN , (FR)
4• KONONCHUK, Oleg , 38190 BERNIN , (FR)

(74) Asiamies - Ombud - Agent

Papula Oy , P.O.Box 981 , 00101 Helsinki , (FI)

(54) Keksinnön nimitys - Uppfinningens benämning - Title of the invention

MENETELMÄ FERROELEKTRISTÄ MATERIAALIA OLEVAN OHUTKALVON VALMISTAMISEKSI

METHOD FOR PREPARING A THIN LAYER OF FERROELECTRIC MATERIAL

METHOD FOR PREPARING A THIN LAYER OF FERROELECTRIC MATERIAL

FIELD OF THE INVENTION

The present invention relates to a method for preparing a thin film of ferroelectric material. More particularly, it relates to a preparation method making it possible to maintain the monodomain nature of the ferroelectric material in the thin film of the final product. This preparation method is used, for example, in the fields of microelectronics, micromechanics, photonics, etc.

TECHNOLOGICAL BACKGROUND OF THE INVENTION

In the preamble, it is noted that a ferroelectric material is a material that has an electric polarization in the natural state, which polarization may be reversed by applying an external electric field. “Ferroelectric domain” refers to each region in a single piece of the material in which the polarization is uniform (all the dipole moments are aligned parallel to each other in a given direction). A ferroelectric material may therefore be characterized as “monodomain,” in the case where this material is formed by a single region in which the polarization is uniform, or as “multidomain,” in the case where the ferroelectric material comprises a plurality of regions having polarities that may be different.

Various processes are known from the state of the art for forming a thin film of ferroelectric material. It may, for example, be a technique using molecular beam epitaxy, plasma sputtering, laser pulsed deposition, or even the application of Smart Cut™ technology, whereby a thin film is removed from a solid substrate of ferroelectric material by fracturing on a fragile zone (or embrittlement plane) formed in the solid substrate by implantation of light species.

The present invention relates more particularly to the preparation of a ferroelectric thin film obtained by the application of such a method, and a specific exemplary embodiment of which may be found in the document EP3646374B1.

According to this method, and after the step of removing the film, it is often necessary to apply treatments to it aimed at improving its surface condition or its crystalline quality or modifying its thickness. The Applicant has however observed that these preparation steps, when they were applied to a ferroelectric thin film transferred onto a silicon support, could lead to the formation of a plurality of ferroelectric domains within the thin film, thus giving it a multidomain nature.

Such a feature makes the film unfit for use, since it affects the performances of the devices that are to be formed on/in the thin film, such as, for example, surface acoustic wave devices (SAW).

Document WO2020200986 discloses that the formation of ferroelectric domains in a surface portion of the film is caused by the existence of hydrogen concentration gradients in the thin film during the application of a thermal treatment. This hydrogen may in particular correspond to the light species implanted in the solid substrate in order to form therein the embrittlement zone, making it possible to remove the thin film there. To permanently restore the monodomain nature of the thin film, this document recommends thinning the ferroelectric thin film after the application of such a thermal treatment.

This thinning may in particular be achieved by chemical-mechanical polishing of the film, but the removal of a relatively large thickness of materials by polishing tends to deteriorate the uniformity of thickness of this film. By way of example, the removal of a thickness in the range of 400 nm to achieve a target thickness of approximately 700 nm results in the formation of a film having a thickness uniformity (i.e. the difference between the largest thickness and the smallest thickness when this thickness measurement is carried out, for example by reflectometry or ellipsometry, at multiple measurement points over the entire extent of the film) in the range of 100 nm. This variability in thickness is not acceptable, since it does not make it possible to collectively manufacture, from such a film, devices having all the required features.

Alternatives exist to thinning by chemical-mechanical polishing. It is possible in particular to consider thinning the thin ferroelectric film by ion etching, for example by etching with reactive ions (or RIE etching, standing for “reactive ion etching” according to the expression usually used). RIE is a type of dry etching that uses a chemically reactive ion plasma to remove surface material from a wafer. The plasma is generated under low pressure by an electromagnetic field. The high-energy plasma ions attack the surface of the film and react therewith to pulverize it, thereby gradually thinning it.

Thus, document US2018261756 proposes forming a thickness of about 2 micrometers (1 micron = 1 micrometer) of PZT by CSD deposition to form an amorphous piezoelectric film. This film is exposed to temperature to form a polycrystal. A thickness of 50 nm is then etched, for example by RIE etching, in order to reduce

its roughness and improve its dielectric voltage. Document US2017170385 proposes a substrate with a monocrystalline thin piezoelectric film, and a step of thinning the monocrystalline thin film by ion etching.

SUBJECT MATTER OF THE INVENTION

The present invention aims to determine the conditions for applying ion etching to the free face of a thin film of monocrystalline ferroelectric material with a view to thinning it. An object of the invention is to propose a method for preparing a thin film of ferroelectric material partially addressing at least the aforementioned drawbacks. More particularly, an object of the invention is to propose a method for ion etching of a thin film of monocrystalline ferroelectric material, obtained by detachment from a donor substrate at an embrittlement plane, this method preserving or restoring the monodomain nature of the thin film. Another object of the invention is to propose a method for thinning a thin film obtained by detachment at an embrittlement plane of a donor substrate, the thinning method making it possible to form a thin film of monocrystalline ferroelectric material, which is monodomain and has a thickness more uniform than that which may be obtained by a thinning process implementing chemical-mechanical polishing.

BRIEF DESCRIPTION OF THE INVENTION

With a view to achieving one of these objects, the subject of the invention is a method for preparing a thin film of monocrystalline ferroelectric material, the method comprising the following steps:

- a step of providing a thin film, the thin film exposing a first free face;
- a step of thinning the thin film by ion etching and defined by etching parameters.

According to the invention, the providing step comprises the assembly of a donor substrate comprising an embrittlement plane with a support substrate and the detachment of the thin film at the level of the embrittlement plane, the thin film having a second face opposite the free face and placed on the support substrate. Furthermore, the etching parameters are chosen so that the free face of the thin film has a roughness which does not exceed a threshold value at the end of the thinning step.

According to other advantageous and non-limiting features of the invention, considered alone or in any technically feasible combination:

- the providing step comprises forming the embrittlement plane by hydrogen ion implantation in the donor substrate;
- the donor substrate is a block of solid material;
- the donor substrate comprises a thick layer of ferroelectric material arranged on a manipulator substrate;
- the thinning step is followed by chemical-mechanical touch-polishing of the free face;
- the providing step comprises a thermal treatment step exposing the free face of the thin film to a certain gaseous atmosphere;
- the thermal treatment is carried out at a temperature between 300°C and the Curie temperature of the ferroelectric material making up the thin film, and for a period of between 30 minutes and 10 hours;
- the thermal treatment step is carried out under an oxidizing or neutral gaseous atmosphere;
- the method comprises, between the thermal treatment step and the thinning step, a step of smoothing the free face to reduce its surface roughness to a value below the roughness threshold value;
- the smoothing step comprises chemical-mechanical touch-polishing of the free face;
- the roughness threshold value is between 3 nm and 7 nm.

According to another aspect, the invention relates to a substrate comprising a thin film of monocrystalline and monodomain ferroelectric material disposed on a support, the thin film having a thickness less than or equal to 700 nm and a thickness uniformity less than or equal to 60 nm.

According to other advantageous and non-limiting features of the invention, considered alone or in any technically feasible combination:

- the substrate comprises an amorphous interlayer placed between the thin film and the support;
- the amorphous interlayer is a silicon oxide, a silicon oxynitride, or a silicon nitride;
- the thin film comprises a free face having a roughness of less than 0.5 nm;
- the ferroelectric material of the thin film is LiTaO3 or LiNbO3;
- the ferroelectric material of the thin film has a 42°RY crystalline direction;

- the support comprises, on the thin film side, a charge trapping layer.
-

BRIEF DESCRIPTION OF THE DRAWINGS

Further features and advantages of the invention will become apparent from the following detailed description of the invention, with reference to the appended figures, in which:

[Fig. 1]

Fig. 1 shows a thin film providing step according to a first embodiment;

[Fig. 2]

Fig. 2 shows a thin film providing step according to a second embodiment;

[Fig. 3]

Fig. 3 shows a preparation method according to the invention.

DETAILED DESCRIPTION OF THE INVENTION

For the sake of simplifying the following description, the same reference signs are used for identical elements or for elements performing the same function in the different embodiments of the method disclosed.

The figures are schematic representations which, for the sake of readability, are not to scale. In particular, the thicknesses of the layers are not to scale with respect to the lateral dimensions of these layers.

The expression “thermal expansion coefficient” used in the remainder of this description in relation to a layer or substrate refers to the expansion coefficient in a direction defined in the principal plane defining this layer or this substrate. If the material is anisotropic, the retained value of the coefficient will be the value with the greatest amplitude. The value of the coefficient is that which is measured at room temperature.

The invention relates to a method for preparing a thin film 3 made of a ferroelectric material transferred from a monocrystalline donor substrate 1 to a support substrate 7 by a transfer technique including implanting light species in the donor substrate 1. Several embodiments of this providing step of a thin film exist.

According to a first embodiment, shown in Figures 1A to 1D, the donor substrate 1 is composed of a solid, monocrystalline and monodomain block of ferroelectric material, for example, of $LiTaO_3$, $LiNbO_3$, $LiAlO_3$, $BaTiO_3$, $PbZrTiO_3$, $KNbO_3$,

BaZrO3, CaTiO3, PbTiO3 or KTaO3. The donor substrate 1 may assume the form of a circular wafer of standardized size, for example, 150 mm or 200 mm in diameter. However, the invention is by no means limited to these dimensions or to this shape. The donor substrate may have been removed from an ingot of ferroelectric materials, with this removal having been carried out so that the donor substrate 1 has a predetermined crystalline orientation. The orientation is chosen according to the intended application. Thus, it is common practice to choose an orientation of 42°RY, in the case where the intention is to exploit the properties of the thin film to form a SAW filter. However, the invention is in no way limited to a particular crystalline orientation.

Irrespective of the crystalline orientation of the donor substrate 1, the method comprises the introduction into the donor substrate 1 of at least one light species. This introduction may correspond to an implantation, i.e., an ion bombardment of a plane face 4 of the donor substrate 1 by light species such as hydrogen and/or helium ions.

In a manner known per se, and as shown in Figure 1B, the purpose of the implanted ions is to form an embrittlement plane 2 delimiting a thin film 3 of ferroelectric material to be transferred that is located on the side of the plane face 4 and another part 5 forming the rest of the substrate.

The nature, the dose of the implanted species, and the implantation energy are chosen as a function of the thickness of the film that is intended to be transferred and of the physico-chemical properties of the donor substrate. In the case of a donor substrate 1 made from LiTaO3, it will thus be possible to choose to implant a hydrogen dose of between $1^{E}16$ and $5^{E}17$ at/cm² with energy that is between 30 and 300 keV to delimit a thin film 3 in the range of 200 to 2,000 nm.

In a following step, shown in Figure 1C, the plane face 4 of the donor substrate 1 is assembled with a face 6 of a support substrate 7. The support substrate 7 may be the same size and the same shape as those of the donor substrate. For reasons of availability and cost, the support substrate 7 is a monocrystalline or polycrystalline silicon wafer. More generally, however, the support substrate 7 may be formed of any material, for example, silicon, sapphire, or glass, and be any shape. In a particular embodiment, the support substrate comprises a base substrate 7b, for example in monocrystalline silicon, on which is arranged a charge trapping layer 7a. The base substrate 7b may have a high resistivity, greater than 1,000 ohms.cm or more conventionally, less than 1,000 ohms.cm. The charge trapping

layer 7a, as is known per se, may be formed from a layer of polycrystalline silicon and have a thickness typically comprised between 500 nm and 10 µm.

Prior to the assembly step, it is possible to consider preparing the faces of the substrates to be assembled using a cleaning, brushing, drying, or polishing step, or using an activation, for example by plasma.

The assembly step may correspond to placing the donor substrate 1 in close contact with the support substrate 7 by molecular adhesion and/or electrostatic bonding. Optionally, to facilitate the assembly of the two substrates 1, 7, in particular when they are assembled by direct bonding, at least one amorphous interlayer may be formed prior to assembly, either on the plane face 4 of the donor substrate 1, or on the plane face 6 to be assembled of the support substrate 7, or on both. This interlayer is for example made of silicon oxide, silicon nitride, silicon oxynitride. It may have a thickness comprised between a few nanometers and a few µm.

Preference will be given to an interlayer having a low hydrogen concentration or forming a barrier to hydrogen diffusion to follow the teachings of document WO2020200986 and thus avoiding the formation of a multidomain zone at the interface between the thin film and the amorphous interlayer on the side of the second face of the thin film 3. The interlayer may be produced according to the various techniques that are known in the state of the art, such as thermal oxidation or nitridation treatments, chemical depositions (PECVD, LPCVD...), etc.

At the end of this assembly step, an assembly is obtained comprising the two associated substrates, the plane face 6 of the support substrate 7 adhering to the plane face 4 of the donor substrate 1.

The assembly is then treated to detach the thin film 3 of ferroelectric material from the donor substrate 1, for example, by cleavage at the embrittlement plane 2.

This detachment step may thus comprise applying thermal treatment to the assembly within a temperature range in the range of 80°C to 300° to allow the thin film 3 to be transferred onto the support substrate 7. In place of or in addition to the thermal treatment, this step may comprise the application of a blade or a jet of gaseous or liquid fluid at the embrittlement plane 2.

Following this detachment step, the structure 9 shown in Figure 1D is obtained. This structure 9 comprises the thin film 3 of monocrystalline ferroelectric material comprising a first free face 8 and a second face 4 arranged on the support substrate 7.

Figures 2A to 2D show a second embodiment, particularly suitable for producing a heterogeneous structure 9, in which the thin film 3 has a thermal expansion coefficient that is very different from that of the support 7, for example, having a difference of more than 10%. This second embodiment differs mainly from the first embodiment by the nature of the donor substrate 1. For the sake of brevity, only the elements of this second embodiment differing from the first one are therefore presented here, all of the other features of the first embodiment could thus be considered.

With reference to Figure 2A, the donor substrate 1 in this case is composed of a thick layer of ferroelectric material 1a, having the same properties as those described for the solid block of ferroelectric materials in relation to the first embodiment, and of a manipulator substrate 1b.

The manipulator substrate 1b is advantageously formed of a material (or a plurality of materials) providing it with a thermal expansion coefficient close to that making up the support substrate 7. “Close” means that the difference in the thermal expansion coefficient of the manipulator substrate 1b and that of the support is less, as an absolute value, than the difference in the thermal expansion of the solid block of ferroelectric material and that of the support substrate 7.

Preferably, the manipulator substrate 1b and the support substrate have an identical thermal expansion coefficient. During the assembly of the donor substrate 1 and the support 7, an assembly is formed that is suitable to withstand a thermal treatment at a relatively high temperature. For the sake of simplicity of implementation, this may be obtained by choosing the manipulator substrate 1b so that it is formed of the same material as that of the support substrate 7.

To form the donor substrate 1 of this embodiment, a solid block of ferroelectric material is first assembled with the manipulator substrate 1a, for example, according to a bonding technique by molecular adhesion as described above or with the help of an adhesive layer. Then, the film of ferroelectric material 1a is formed by thinning, for example, by grinding and/or chemical-mechanical polishing and/or etching. Before assembly, provision may be made for the formation of an adhesion layer (for example, by deposition of silicon oxide and/or silicon nitride, of an adhesive layer, for example, a polymer) on either one or both of the faces that are brought into contact. The assembly may include the application of low-tempera-

ture thermal treatment (for example, between 50 and 300°C, typically 100°C) allowing sufficient strengthening of the bonding energy to allow the next step of thinning.

The manipulator substrate 1b is chosen to have a thickness that is substantially equivalent to that of the support substrate 7. The thinning step is carried out so that the thickness of the thick layer 1a is small enough for the stresses generated during the thermal treatments applied in the rest of the process to have a lower intensity. At the same time, this thickness is large enough to be able to remove the thin film 3, or a plurality of such films. This thickness may, for example, be between 5 and 400 µm.

The following steps of the method of this second embodiment are equivalent to those of the steps described in the first embodiment. Light species are implanted within the thick layer 1a to generate an embrittlement plane 2, which marks the separation of the thin film 3 from the rest 5 of the donor substrate 1, as shown in Figure 2B. This step is followed by the step of assembling the donor substrate 1 on the support substrate 7, as shown in Figure 2C. The thin film 3 is then detached from the rest of the substrate 5 in order to obtain the structure 9 shown in Figure 2D.

This embodiment is advantageous in that the assembly formed from the donor substrate 1 and the support 7 may be exposed to a temperature that is much higher than that applied in the first embodiment, without any risk of uncontrolled fracturing of one of the substrates or delamination of the donor substrate 1 of the thin film 3. The balanced structure, in terms of the thermal expansion coefficient of this assembly, thus allows facilitating the step of detaching the thin film 3 by exposing the assembly to a relatively high temperature, for example, between 100 and 500°C.

Irrespective of the embodiment chosen, and as specified in the introduction to this application, steps of finishing the thin film 3 are then necessary to improve its crystalline and surface quality, and provide a thin film 3, the thickness of which matches, or approaches, a target thickness. These finishing steps aim in particular to eliminate a work-hardened and rough surface layer, resulting from the cleavage and detachment of the thin film 3 from the rest of the donor substrate.

As explained in document WO2020200986, a thermal treatment step is first applied to the transferred thin film 3. This thermal treatment makes it possible to cure the crystalline defects present in the thin film 3, or even to reduce the roughness

of the free face of the thin film. Moreover, it helps consolidating the bond between the thin film 3 and the support 7. The thermal treatment brings the structure to a temperature between 300°C and the Curie temperature of the ferroelectric material for a period of between 30 minutes and 10 hours. This thermal treatment is preferably carried out by exposing the free face of the thin film 3 to an oxidizing or neutral gaseous atmosphere, i.e., without covering this face of the thin film with a protective layer.

To avoid any ambiguity, it is emphasized that the finishing thermal treatment step of the thin film 3 is distinct from the fracture thermal treatment applied to the assembled structure.

A method in accordance with the invention also comprises, after the finishing thermal treatment, a step of thinning the thin film 3. This step aims in particular to eliminate the multidomain surface layer which may have been created during the previous thermal treatment step. It also aims to provide a thin film 3, the thickness of which corresponds to a target thickness, as mentioned previously. This thinning may, in a general way, correspond to polishing of the first free face 8 of the thin film 3, for example, by mechanical, chemical-mechanical thinning techniques. This thinning may result in removing a thickness of between 100 nm and 1 µm, depending on the thickness of the transferred layer, the target thickness of the thin film 3, the thickness of the multidomain and/or work-hardened layer present superficially at the end of the finishing thermal treatment. However, as was presented in the introduction to this application, such an approach of thinning by chemical-mechanical polishing tends to degrade the characteristic of uniformity of the thin film 3, which is not acceptable. Additional experiments carried out by the Applicant have thus shown that this uniformity degrades by about 25 nm for a removal of 100 nm.

In the search for an alternative solution to thinning by polishing, the Applicant has carried out the following experiments aimed at implementing this step of thinning by ion etching.

An experimental sample consisted of a monocrystalline thin film of lithium tantalate transferred onto a silicon substrate (in accordance with the method which has just been disclosed and including the finishing thermal treatment), the thin film however not having undergone any thinning step. The preparation method applied to this thin film therefore consisted only of the thermal treatment step. The thin film

therefore had a multidomain surface thickness. It had a thickness of 680 nm and a roughness in the range of 10 nm RMS.

On this sample, a first RIE P1-type ion etching process and a second RIE P2-type ion etching process were applied respectively, each based on a reactive gas of CHF3. As recalled in the introduction to this application, an RIE etching process consists of exposing the surface to be treated (here the free face 8 of the thin film 3) to a reactive ion plasma. This plasma leads to surface etching of the material making up the free face of the thin film.

The effect of an ion etching, in particular of the RIE type, on the roughness of the film, is dependent on the etching parameters, and in particular on the power of the radio frequency field formed to create the plasma of reactive ions, on the flow rate of the reactive gas, on the temperature of the thin film (which may be controlled by controlling the temperature of the support on which the substrate rests), and on the pressure prevailing in the treatment chamber of the RIE equipment.

The first RIE P1 process applied to the sample presented etching parameters tending to increase the roughness of the thin film, in particular by choosing a flow rate of reactive gas introduced into the chamber of 65 sccm (standing for “Standard Cubic Centimeter per Minute”), i.e. 1.08 10^-6 m^3/s for standard conditions. The process was applied to the sample to reduce the thickness of the thin film by 200 nm and therefore to achieve a thickness of 480 nm.

The second RIE P2 process applied to the sample presented etching parameters tending to reduce the roughness of the thin film, in particular by choosing a flow rate of reactive gas introduced into the chamber of 20 sccm, i.e. 0.3 10^-6 m^3/s under standard conditions. The process was applied to the sample to reduce the thickness of the thin film by 200 nm and therefore lead to a thickness of 480 nm.

The following table presents the results obtained at the end of the experiments carried out. The roughnesses are expressed in RMS quantities measured on a field of 5×5 µm by measurement by atomic force.

	Characteristic of the thin film after the thinning step
P1	Multidomain Roughness: 17 nm Uniformity: 15.3 nm
P2	Monodomain Roughness: 2.9 nm

	Uniformity: 9.9 nm

It should be noted that the application of the first process P1 (the etching parameters of which tend to increase the roughness of the thin film) leads to obtaining a thinned film with high roughness. Moreover, and contrary to what was expected, the monodomain nature of this thin film 3 has not been restored.

On the contrary, the application of the second process P2 (the etching parameters of which tend to reduce the roughness of the thin film) leads not only to obtaining a thinned film, the roughness of which is much less, but which also makes it possible to restore the monodomain nature of the thin film 3.

It should be noted in both cases that the uniformity of the sample, not having undergone thinning treatment by polishing, is of good quality.

According to a possible interpretation of these results, which in no way limits the performances of the preparation method of the invention, it would seem that the ions of the plasma interact with the piezoelectric material present in the peaks of roughness when said roughness is excessive, for modifying its polarization properties, which results in creating or maintaining superficially a multidomain thickness.

To guard against this phenomenon, it therefore appears necessary to choose the etching parameters to reduce the roughness of the thin film below a threshold value from which this modification of the polarization properties is triggered.

The greater the initial roughness of the thin film, i.e., the roughness of the thin film just before the application of the thinning step, and in particular when it exceeds the roughness threshold value, the more the etching parameters must be controlled in order to reduce and/or not exceed the roughness threshold value during and at the end of this step. Conversely, the lower the initial roughness, and in particular when it is lower than the roughness threshold value, the more the etching parameters may be chosen freely, without however leading to exceeding the roughness threshold value at the end of the thinning step. In this way, the method is able to provide a monodomain thin film, the uniformity of which is much better than that of a film thinned by chemical-mechanical polishing.

Depending on the nature of the ferroelectric material making up the thin film, the roughness threshold value may be between 3 nm and 7 nm, for example 5 nm or 6 nm.

The invention therefore takes advantage of these results to propose a method for preparing the thin film 3, shown schematically in Figure 3.

The preparation method therefore comprises a step of providing the monocrystalline thin film 3 leading to exposing the first free face 8 of this film, as has been explained previously, for example according to either one of the methods represented in Figures 1 and 2. This providing step also comprises the application of the finishing thermal treatment step aimed in particular at evacuating the hydrogen present in the thin film and leading to the formation of a multidomain surface thickness (Figure 3A). At the end of this step, the thin film has a determined roughness, typically in the range of 10 nm RMS measured over a field of 5×5 µm by atomic force measurement (AFM). It has a relatively thick thickness in the range of 1,000 nm or more.

After this providing step, a preparation method in accordance with the invention comprises a thinning step aimed at providing a monocrystalline and monodomain layer with a chosen thickness, typically in the range of 700 nm or less.

Very generally, and as shown in Figure 3B, this thinning step is carried out by ion etching, i.e., exposing the free face 8 of the thin film to ions, advantageously reactive ions. These may in particular be ions of argon, of CHF3, or any other ions capable of reacting chemically with the material making up the piezoelectric thin film. Depending on the thickness of the thin film 3 provided and the target thickness, the thinning step may result in eliminating a thickness in the range of 50 nm to 900 nm, and typically eliminating a thickness greater than 100 nm, for example between 100 nm and 400 nm. In all cases, the uniformity of the film is much less degraded than when the film is thinned by chemical-mechanical polishing; this thickness uniformity may be less than 60 nm as measured by reflectometry or ellipsometry or even less than 30 nm and even reach 20 nm or less.

To achieve this, and according to the invention, the etching parameters are chosen so that the free face 8 of the thin film 3 has a roughness which does not exceed a threshold value at the end of the thinning step. It is noted that in view of the relatively large thickness to be eliminated, it would have been more natural to choose the etching parameters so that these favor the speed of removal rather than the roughness.

As specified above, the “roughening” effect of the thinning step by ion etching may be reduced by reducing at least one of the following etching parameters: the flow

of reactive gases, the power of the radio field frequency formed to create the reactive ion plasma, the temperature of the thin film 3, and the pressure prevailing in the processing chamber of the etching equipment.

The person skilled in the art could very simply adjust these parameters during a series of routine experiments to determine, for a given material and for an initial surface condition of the thin film 3, which combination of parameters leads to etching while avoiding exceeding the roughness threshold value.

If the providing step is not sufficiently controlled and this roughness varies from the provision of one thin film to another, the preparation method may provide, between the providing step and the thinning step, for a step of measuring the roughness of the thin film in order to adjust, layer-by-layer, the etching parameters of the RIE etching process to the measured roughness.

According to a particularly advantageous embodiment, the preparation method of the invention comprises, between the finishing thermal treatment step and the thinning step, a step of smoothing the free face 8 to reduce its surface roughness at a relatively low initial value, for example less than 1 nm RMS.

For example, the smoothing step comprises chemical-mechanical “touch”-polishing of the free face 8. This polishing aims to reduce the roughness of the thin film, without noticeably thinning this film. This very superficial smoothing step does not affect the uniformity of the film.

The roughness of the free face 8 of the thin film 3 being reduced, the etching parameters may be chosen more freely than in the absence of this smoothing step, while reducing the risk of exceeding the roughness threshold value at the end of the thinning step, and therefore while restoring the monodomain nature of the thin film.

Whether this preliminary smoothing step is implemented or not, the method for preparing the thin film may be followed, after the thinning step, by chemical-mechanical touch-polishing of the free face. This step makes it possible to prepare the free face 8 so that it ultimately has (if this has not been obtained at the end of the thinning step) a low roughness, for example less than 0.5 nm RMS 5×5 µm by atomic force measurement (AFM) without affecting the uniformity of this film.

Naturally, the invention is not limited to the embodiments described, and it is possible to add variant embodiments without departing from the scope of the invention as defined by the independent claims.

PATENTTIVAATIMUKSET

1. Menetelmä yksikiteistä ferroelektristä materiaalia olevan ohutkalvon (3) valmistamiseksi, joka menetelmä käsittää seuraavat vaiheet:

- vaihe, jossa aikaansaadaan ohutkalvo (3), joka ohutkalvo (3) paljastaa ensimmäisen vapaan pinnan (8);
- vaihe, jossa ohutkalvo ohennetaan ionietsauksella ja määritellään etsausparametreilla;

jolloin menetelmä on t u n n e t t u siitä, että aikaansaamisvaihe käsittää heikennystason (2) käsittävän luovutussubstraatin (1) kokoamisen tukisubstraatin (7) kanssa ja ohutkalvon (3) irrottamisen heikennystasosta (2), jolloin ohutkalvossa(3) on vapaan pinnan (8) vastakkaisella puolella oleva pinta, joka on järjestetty tukisubstraatin (7) päälle, ja että etsausparametrit valitaan siten, että ohutkalvon (3) vapaan pinnan (8) karheus ei ylitä kynnysarvoa ohennusvaiheen lopussa.

2. Edellisen patenttivaatimuksen mukainen menetelmä, jossa aikaansaamisvaihe käsittää haurastumistason (2) muodostamisen implantoimalla vetyionia luovuttajasubstraattiin (1).

3. Jonkin edellisen patenttivaatimuksen mukainen menetelmä, jossa ohennusvaihetta seuraa vapaan pinnan (8) mekaanis-kemiallinen kosketuskiillotus.

4. Jonkin edellisen patenttivaatimuksen mukainen menetelmä, jossa aikaansaamisvaihe käsittää lämpökäsittelyvaiheen, jossa ohutkalvon (3) vapaa pinta (8) altistetaan määrätylle kaasumaiselle ilmakehälle.

5. Edellisen patenttivaatimuksen mukainen menetelmä, jossa lämpökäsittelyvaihe suoritetaan lämpötilassa, joka on 300 °C:n ja ohutkalvon (3) muodostavan ferroelektrisen materiaalin Curie-lämpötilan välillä, 30 minuutin ja 10 tunnin välillä.

6. Patenttivaatimuksen 4 tai 5 mukainen menetelmä, jossa lämpökäsittelyvaihe suoritetaan hapettavassa tai neutraalissa kaasuatmosfäärissä.

7. Jonkin patenttivaatimuksista 4–6 mukainen menetelmä, joka käsittää lämpökäsittelyvaiheen ja ohennusvaiheen välissä vapaan pinnan (8) tasoitusvaiheen sen pinnan karheuden vähentämiseksi karheuden kynnysarvoa pienemmäksi.

8. Edellisen patenttivaatimuksen mukainen menetelmä, jossa tasoitusvaihe käsittää vapaan pinnan (8) mekaanis-kemiallisen kosketuskiillotuksen.

9. Jonkin edellisen patenttivaatimuksen mukainen menetelmä, jossa karheuden kynnysarvo on välillä 3–7 nm.

10. Substraatti, joka käsittää yksikiteistä ja yksidomeenista ferroelektristä materiaalia olevan ohutkalvon (3), joka on järjestetty alustalle (7), jolloin ohutkalvon paksuus on enintään 700 nm ja paksuuden yhtenäisyys on enintään 60 nm.

11. Edellisen patenttivaatimuksen mukainen substraatti, joka käsittää amorfisen välikerroksen, joka on sijoitettu ohutkalvon (3) ja alustan (7) väliin.

12. Edellisen patenttivaatimuksen mukainen substraatti, jossa amorfinen välikerros on piioksidi, piioksinitridi tai piinitridi.

13. Jonkin patenttivaatimuksista 10–12 mukainen substraatti, jossa ohutkalvo (3) käsittää vapaan pinnan (8), jonka karheus on alle 0,5 nm.

14. Jonkin patenttivaatimuksista 10–13 mukainen substraatti, jossa ohutkalvon (3) ferroelektrinen materiaali on $LiTaO_3$:a tai $LiNbO_3$:a.

15. Jonkin patenttivaatimuksista 10–14 mukainen substraatti, jossa alusta (7) käsittää ohutkalvon (3) puolella varauksensieppauskerroksen.

[Fig. 1]

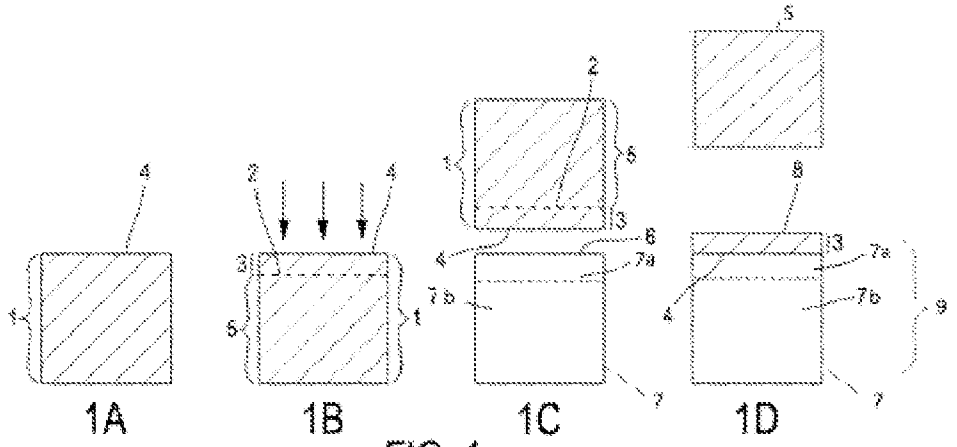

FIG. 1

[Fig. 2]

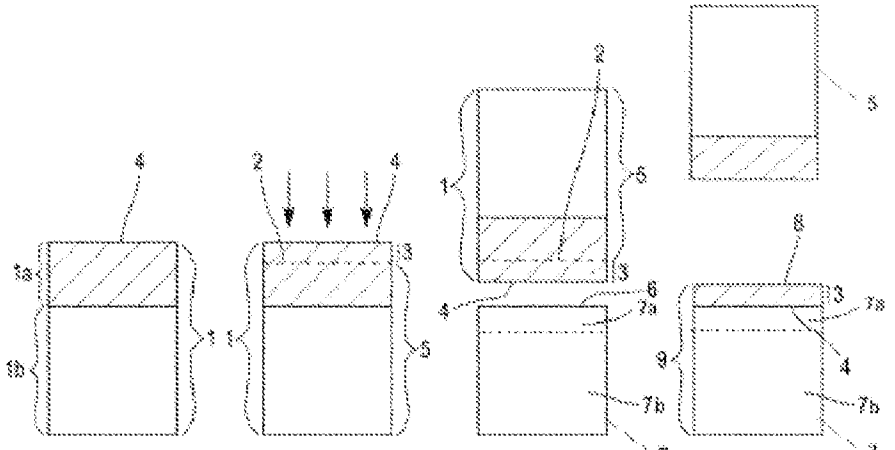

FIG. 2

[Fig. 3]

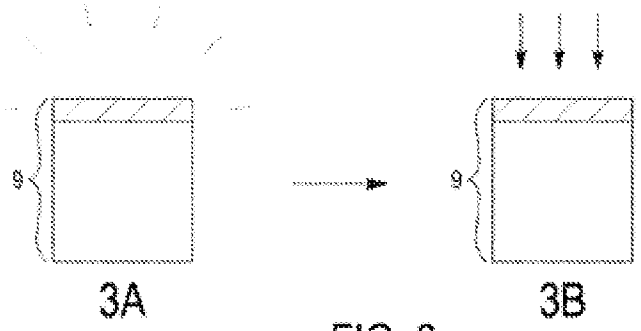

FIG. 3