(12) INTERNATIONAL APPLICATION PUBLISHED UNDER THE PATENT COOPERATION TREATY (PCT)

(19) World Intellectual Property Organization
International Bureau

(43) International Publication Date
3 April 2014 (03.04.2014)

WIPO | PCT

(10) International Publication Number
WO 2014/047690 A1

(51) International Patent Classification:
A47F 11/10 (2006.01) *H01B 5/02* (2006.01)
A47B 96/00 (2006.01) *H01B 17/18* (2006.01)
A47B 97/00 (2006.01) *H02B 1/20* (2006.01)

(21) International Application Number:
PCT/AU2013/001111

(22) International Filing Date:
27 September 2013 (27.09.2013)

(25) Filing Language: English

(26) Publication Language: English

(30) Priority Data:
2012904248 28 September 2012 (28.09.2012) AU

(71) Applicant: **NUFX PTY LTD** [AU/AU]; 2 Cordover Court, Alfredton, Victoria 3350 (AU).

(72) Inventors: **WADDINGTON, Ross**; 2 Cordover Court, Alfredton, Victoria 3350 (AU). **WALSH, Gary Noel**; 31 Pecks Road, Sydenham, Victoria 3037 (AU).

(74) Agent: **DAVIES COLLISON CAVE**; 1 Nicholson Street, Melbourne, Victoria 3000 (AU).

(81) Designated States *(unless otherwise indicated, for every kind of national protection available)*: AE, AG, AL, AM, AO, AT, AU, AZ, BA, BB, BG, BH, BN, BR, BW, BY, BZ, CA, CH, CL, CN, CO, CR, CU, CZ, DE, DK, DM, DO, DZ, EC, EE, EG, ES, FI, GB, GD, GE, GH, GM, GT, HN, HR, HU, ID, IL, IN, IS, JP, KE, KG, KN, KP, KR, KZ, LA, LC, LK, LR, LS, LT, LU, LY, MA, MD, ME, MG, MK, MN, MW, MX, MY, MZ, NA, NG, NI, NO, NZ, OM, PA, PE, PG, PH, PL, PT, QA, RO, RS, RU, RW, SA, SC, SD, SE, SG, SK, SL, SM, ST, SV, SY, TH, TJ, TM, TN, TR, TT, TZ, UA, UG, US, UZ, VC, VN, ZA, ZM, ZW.

(84) Designated States *(unless otherwise indicated, for every kind of regional protection available)*: ARIPO (BW, GH, GM, KE, LR, LS, MW, MZ, NA, RW, SD, SL, SZ, TZ, UG, ZM, ZW), Eurasian (AM, AZ, BY, KG, KZ, RU, TJ, TM), European (AL, AT, BE, BG, CH, CY, CZ, DE, DK, EE, ES, FI, FR, GB, GR, HR, HU, IE, IS, IT, LT, LU, LV, MC, MK, MT, NL, NO, PL, PT, RO, RS, SE, SI, SK, SM, TR), OAPI (BF, BJ, CF, CG, CI, CM, GA, GN, GQ, GW, KM, ML, MR, NE, SN, TD, TG).

Published:

— *with international search report (Art. 21(3))*

(54) **Title**: CONFIGURING ITEM DISPLAY STRUCTURES WITH ELECTRICALLY POWERED FUNCTIONALITY

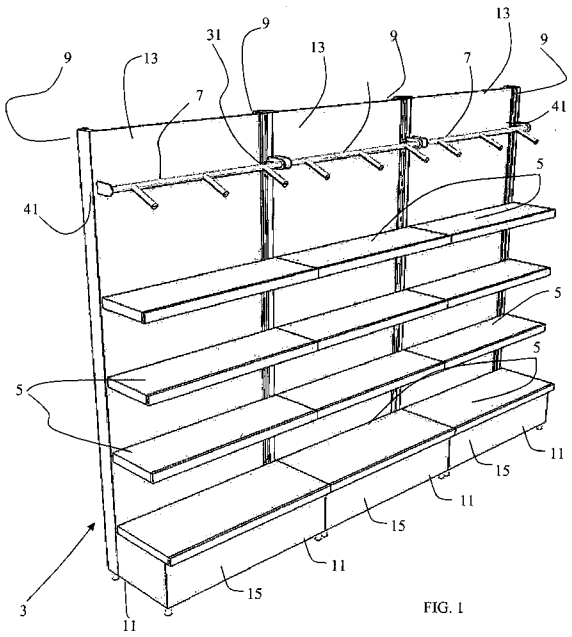

FIG. 1

(57) **Abstract**: There is disclosed a method of configuring an item display structure with electrically powered functionality, the item display structure comprising a first support and at least one second support which is mountable to the first support at any one of selectable positions so as to be able to hold at least one item such that the item is displayed, the method comprising: applying to the first support electrical contacts ("first support contacts") which are electrically coupled to a power source or able to be so coupled; and configuring the or each second support with a powered utility, including applying to that second support electrical contacts ("second support contacts") such that, when that second support is mounted to the first support, each second support contact engages a respective one of the first support contacts, irrespective of the position at which that second support is so mounted, whereby the powered utility is operable by the power source.

WO 2014/047690 A1

CONFIGURING ITEM DISPLAY STRUCTURES WITH ELECTRICALLY POWERED FUNCTIONALITY

The present invention relates to configuring an item display structure with electrically powered functionality. The invention has particular, though by no means exclusive, application to merchandising.

Accentuating products displayed for retail sale, typically by way of accent lighting to structures - e.g. shelving or rack structures – used to hold and display the products, has become popular in recent years. There is a need in the art for a reliable, straightforward way of configuring a display structure with powered functionality, such as lighting, for the purposes of accentuating items displayed by the structure, or for alternative purposes.

According to a first aspect of the present invention, there is provided a method of configuring an item display structure with electrically powered functionality, the item display structure comprising a first support and at least one second support which is mountable to the first support at any one of selectable positions so as to be able to hold at least one item such that the item is displayed, the method comprising:

applying to the first support electrical contacts ("first support contacts") which are electrically coupled to a power source or able to be so coupled; and

configuring the or each second support with a powered utility, including applying to that second support electrical contacts ("second support contacts") such that, when that second support is mounted to the first support, each second support contact engages a respective one of the first support contacts, irrespective of the position at which that second support is so mounted, whereby the powered utility is operable by the power source.

The method may comprise retrofitting the powered utility to the display structure.

According to a second aspect of the present invention, there is provided an item display structure configured with electrically powered functionality via a method according to the first aspect.

According to a third aspect of the present invention, there is provided an item display structure configured with electrically powered functionality, the item display structure comprising a first support and at least one second support which is mountable to the first support at any one of selectable positions so as to be able to hold at least one item such that the item is displayed, wherein the first support is provided with electrical contacts ("first support contacts") which are electrically coupled to a power source or able to be so coupled, and the or each second support is provided with a powered utility which includes electrical contacts ("second support contacts") which are arranged such that, when that second support is mounted to the first support, each second support contact engages a respective one of the first support contacts, irrespective of the position at which that second support is so mounted, whereby the powered utility is operable by the power source.

Preferably, the display structure is of modular construction.

Said positions may comprise ones which are spaced apart or which form a continuum.

In a preferred embodiment of the invention, the display structure comprises a plurality of said second supports mountable to the first support at ones of said positions.

At least one said second support may comprise a shelf. Alternatively or additionally, at least one said second support may comprise a rack. In a preferred embodiment of the invention, the display structure comprises a plurality of said second supports all of which are shelves, or all of which are racks.

The or each rack may be a garment-hanging rack, which rack may, for example, be one from which a garment can be hung via a clothes hanger.

The powered utility with which a said second support is configured may comprise lighting, which lighting may, for example, comprise LED lighting. The lighting may, for example, be arranged in a strip or line along the second support – e.g. along an edge of the support, which edge may be a front edge. Preferably, the lighting is accent lighting arranged to

illuminate or highlight item(s) held by the second support(s).

Alternatively or additionally, the powered utility with which a said second support is configured may comprise a mechanical utility such as one that comprises one or more fans, which fan(s) may, for example, be operable to blow air to the item(s) and/or to flutter tinsel tape and/or move other components, such as flutter tubes, forming part of the utility.

In a preferred embodiment of the invention, the powered functionality is for accenting/accentuating the item(s) held by the second support(s).

In a preferred embodiment of the invention, the display structure is for a merchandising outlet, whereby the item(s) may comprise merchandise. Alternatively or additionally, the display structure may, for example, be one for exhibiting artwork, whereby the item(s) may comprise pieces of art.

In preferred embodiments of the invention, the first support contacts consist of a pair of contacts. In these embodiments, each of the two first support contacts is dimensioned sufficiently to be engaged by a respective one of the second support contacts when the or each second support is mounted at any one of said positions. In one embodiment of the invention, said positions are arranged along a line (so that positional adjustability of the or each second support has one dimensional degree of freedom), which may be a straight line or a curved line, which may follow a direction in which the first support extends. The curved line may lie in a plane, or may, for example, be helical. In one embodiment of the invention, the first support comprises an elongate bar structure. Preferably, the first support contacts are elongate and extend along or parallel to the line. Preferably, each of the elongate first support contacts forms part of a bus bar. Preferably, the bus bar or each of the elongate first support contacts is configured in the form of strip. In one advantageous embodiment of the invention, the bus bar or each of the elongate first support contacts is mounted to the first support via adhesive tape, such as, for example, double-sided tape. According to a fourth aspect of the present invention, there is provided a bus bar comprising an elongate base and parallel elongate electrodes held within slots

formed in the base. Preferably, the base is extruded. Preferably, the base is configured in the form of an extruded plastic strip. Preferably, the bus bar includes respective pairs of retainers which are integrally formed with the base and project outwardly therefrom in converging planes, the retainers in each pair engaging opposed longitudinal edges of a respective one of the electrodes. Preferably, the busbar is formed by a process of cross-head extrusion, of both metal forming the electrodes and plastic forming the base (and retainers, if present). Preferably, the base is configured with a longitudinal notch through which an element, such as a screw, nail or pop-rivet can be directed to fasten the bus bar to a structure.

Alternatively, the first support contacts may be greater than two in number. In one embodiment of the invention, said positions may be arranged in a plane (so that the positional adjustability of the or each second support has two dimensional degrees of freedom); e.g., the first support may be configured with a uniform "grid" of connection points which is such that the or each second support is connectable at selectable ones of those points corresponding to said positions. The first support contacts may then be arranged in a staggered manner – e.g., in the manner of a checkerboard pattern, in registration with the grid.

Preferably, the or each second support is configured such that the second support contacts are resiliently biased into conditions in which they engage respective ones of the first contacts when that second support is mounted at a said position. Preferably, each second support contact is spring-biased. Preferably, each second support contact is mounted within an insulative housing with respect to which it is movable against the bias, which housing preferably houses a spring which biases the second support contact into said condition. Preferably, the housing comprises a block, which may be a moulded block that is preferably formed of plastic. Preferably, the or each housing is mounted to the second support. In a preferred embodiment of the invention, an electrical connector unit, comprising said housing and said second support contact mounted within the housing, and preferably further comprising said spring, is applied to the or each second support. Preferably, each second support contact is arranged so as to extend through a portion of the

respective second support so it can engage a respective said first support contact. Preferably, said portion comprises a wall portion. Preferably, the wall portion is a rear wall portion. Preferably, each second support contact is arranged to extend through a respective opening through said portion. Preferably, said unit includes insulating cover portions through each of which a distal end of a respective said second support contact extends, the cover portions being arranged to extend through the openings whereby to isolate the distal ends from said portion of the second support.

According to a fifth aspect of the present invention, there is provided an electrical connector unit, for providing electrical connection to at least one contact provided on a first support ("first support contact"), the unit comprising a housing, which is mountable to a second support that can be mounted to the first support, and at least one contact ("second support contact") mounted within the housing, the or each second support contact being resiliently biased towards a condition in which it can engage a respective said first contact when the housing is mounted to the second support and the second support is mounted to the first support. Preferably, the unit includes at least one spring mounted within the housing, the or each spring biasing a respective said second support contact towards said condition. Preferably, the housing comprises a block, which may be a moulded block that is preferably formed of plastic. Preferably, the or each second support contact is arranged so as to extend through a portion of the second support so it can engage a respective said first support contact. Preferably, said unit includes at least one insulating cover portion and a distal end of the or each second support contact extends through a respective said cover portion, the or each cover portion being arranged to extend through an opening through said portion of the second support whereby to isolate the distal end from said portion. Said portion may comprise a wall portion, which may be a rear wall portion. Preferably, the housing is configured to be received against that portion when mounted to the second support. Preferably, the housing is configured so as to be received against an underside of the second support when mounted to the second support.

Preferably, the housing is configured such that a protective casing can be fitted thereto. Preferably, the housing and casing are configured with interengageable formations

whereby to be releasably interconnectable. Preferably, the formations comprise ribs and slots which are slidably engageable with the ribs.

According to a sixth aspect of the present invention, there is provided an electrical connector assembly comprising said unit and said casing, wherein said casing is fitted to the housing.

Preferably, the/each second support contact comprises an elongate member or projection having a distal end, and the first and second support contacts are arranged such that the/each distal end contacts a respective said first support contact when the/each second support is mounted at a said position. Preferably, each elongate member/projection comprises a pin.

Alternatively, the/each second support contact may comprise a leaf contact.

In a preferred embodiment of the invention, at least one said second support comprises a shelf and an adapter fitted or mounted to the shelf, and a respective said electrical connector unit is fitted or mounted to said adapter whereby to be mounted to the shelf.

According to a seventh aspect of the present invention, there is provided an adapter for mounting an electrical connector unit to a shelf, the adapter being configured such that it can be fitted or mounted to the shelf and such that said unit can be fitted or mounted to it.

The shelf may be a wire shelf.

The adapter may comprise connecting means engageable with the shelf to hold the adapter to the shelf. The connecting means may comprise a hook or catch member receivable over a portion of the shelf, which portion may, for example, be an upwardly projecting wall portion of the shelf, such that the adapter depends from the portion of the shelf. The adapter may comprise a roof portion receivable against an underside of the shelf, an underside of which roof portion is arranged for receipt of a said connector unit thereagainst

when the connector unit is fitted or mounted to the adapter. The roof portion is preferably configured in the form of a strip or plate. The adapter may comprise a mounting section arranged for receipt of the connector unit thereagainst when the connector unit is fitted or mounted to the adapter. Preferably, the mounting section comprises a tongue or flange. Preferably, the mounting section is configured with at least one opening, the or each opening being arranged such that a respective said contact of the unit extends therethrough when said unit is fitted or mounted to the adapter. Preferably, the or each opening is configured for snug receipt of an insulative cover portion or collar of the unit through which the respective contact extends. The adapter may further comprise a side wall portion which projects downwardly from the roof portion. Preferably, the roof portion and/or side wall portion is configured such that electrical wiring to the unit is supported therefrom.

According to an eighth aspect of the present invention, there is provided an assembly comprising an adapter as defined above and:

said electrical connector unit or assembly, which is fitted or mounted to said adapter; and/or

said shelf, to which the adapter is fitted or mounted.

The first support may comprise a support stand, which may be permanently fixed or relocatable. In one embodiment of the invention, the display structure comprises a gondola shelving structure, e.g. one which is suitable for use in a supermarket, wherein shelves are mounted on opposite sides of the support stand, and wherein the second supports comprise shelves. In another embodiment of the invention, the display structure comprises a shelving structure wherein shelves are mounted to only one side of the support stand.

The first support may, alternatively, comprise a permanently fixed structure, such as a building wall.

In a preferred embodiment of the invention, said first and/or second support contacts are positioned away from locations at which the first and second supports interengage when

the former is/are mounted to the latter. In the preferred embodiments of the invention, the first and second supports have connectors which are interengageable at said locations. Preferably, the first and/or second support contacts are positioned so as to be substantially concealed and/or shielded by the display structure and/or the item(s) when displayed thereby. In one preferred embodiment of the invention, the first support contacts are applied to panelling or an upright of the first support against or adjacent to which the or each second support, preferably a rearward part of that support, is received when mounted to the first support at a said position.

Preferably, the first support is provided with a pair of elongate electrical contacts which are electrically insulated from each other and the or each second support is provided with contacts positioned such that each abuts a respective one of the elongate contacts when the second support is mounted to the first support at any one of said positions whereby the electrical coupling of the second support to the first support is effected.

The power supply may comprise an AC power supply or a DC power supply.

The power supply may be mounted to or carried by the display structure, preferably the first support, and may, for example, include an on-board power supply, e.g. a battery, which may be carried by or mounted to the first support, preferably in a manner such that it is concealed, at least when the display is in use.

The power supply may comprise a mains power supply and the structure may be provided with a transformer/rectifier connected or connectable to the mains power.

According to a ninth aspect of the present invention, there is provided a said second support to which said second support contacts are applied or which is provided with a said powered utility including said second contacts.

According to a tenth aspect of the present invention, there is provided a said first support to which said first support contacts are applied or which is provided with said first support

contacts.

The present invention will now be described, by way of non-limiting example only, with reference to the accompanying drawings, in which:

Figure 1 shows a product display unit which is to be configured with accent lighting functionality in accordance with a preferred embodiment of the present invention;

Figure 2 shows the layout of an accent lighting system as applied to the display unit of Figure 1 (to provide the lighting functionality), omitting panels, shelves and racks of the unit for clarity;

Figure 3 corresponds to Figure 2 though shows the panels;

Figure 4 is a skeleton view showing only the accent lighting system as applied to the display unit of Figure 1;

Figure 5 shows a rack unit forming part of the display unit of Figure 1;

Figures 6A and 6B each show details of busbar which may form part of the system;

Figure 7 shows details of a pressure contact electrode unit applied to a shelf of the display unit of Figure 1 and forming part of the lighting system;

Figures 8A and 8B show details of the pressure contact electrode unit and a mounting thereof to a shelf of the display unit of Figure 1;

Figure 9A shows details of a pressure contact electrode unit applied to an alternatively configured shelf of the display unit;

Figures 9B and 9C show details of an alternatively configured pressure contact electrode unit of the system;

Figure 9D shows details of a modified version of the pressure contact electrode unit of Figures 9B and 9C;

Figure 9E depicts application of a said alternatively configured pressure contact electrode unit to a shelf of the display unit;

Figure 9F shows a casing applied to a said alternatively configured pressure contact electrode unit;

Figures 10A to 10C show details of a said alternatively configured pressure contact electrode applied to another alternatively configured shelf of the display unit, via an adapter;

Figure 11 is a circuit diagram of the lighting system;

Figure 12 schematically shows details of an electrical coupling between an LED strip light of the lighting system, applied to a rack unit or shelf of the product display unit of Figure 1, and a respective pressure contact electrode unit of the system applied to that rack unit or shelf;

Figures 13 and 14 provide examples of shelving units to which the invention is applicable; and

Figures 15A and 15B show details of an alternative electrically powered system as applied to the product display unit in accordance with another preferred embodiment.

A product display unit 1 to which an accent lighting system is retrofitted in accordance with a preferred embodiment of the present invention is shown in Figure 1. The display unit 1 is a modular shelving and rack display unit comprising a support structure 3, shelves 5 mounted to the support structure 3, and rack units 7 also mounted to the support structure 3.

The support structure 3 comprises spaced apart upright posts 9, feet 11 supporting the posts 9 at lower ends thereof, panels 13 supported from the posts 9 and extending therebetween, and kicker panels 15 coupled to front ends of the feet 11 and extending therebetween.

The display unit 1, as previously mentioned, is of modular construction, whereby the shelves 5 can be mounted to the support structure 3 at selectable positions. To this end, referring to Figure 12, each shelf 5 includes brackets 21 either end thereof, each bracket being configured with locking tabs 23, and the posts 9 are configured with axially spaced apart slots 25, into which the tabs 23 can be inserted such that the given shelf is mounted to a pair of adjacent posts 9 at a selectable level, consistent with common retail shelving units. Each rack unit 7, referring to Figure 5, also comprises end brackets 41 each of which is configured with locking tabs (not shown) receivable into slots 25 of adjacent posts 9, whereby each rack unit 7 is also mountable to the support structure 3 at a selectable level. The rack units 7, or instead the shelves 5, may be omitted without

departure from the invention.

The lighting system to be installed in the display unit 1, in accordance with a preferred embodiment of the invention, will comprise strips of LED lighting applied to shelves 5 and rack units 7, so as to illuminate items placed on shelves 5 and hanging from the rack units 7 respectively, and electrical contacts arranged such that power can be provided to the lights irrespective of the selected positions at which the shelves 5 and rack units 7 are mounted.

Referring to Figures 2, 3 and 7, installation of the lighting system 50 comprises mounting respective busbars 52 to the rear panels 13 adjacent ones of the posts 9, each busbar 52 comprising, as can be seen in Figures 6A and 6B, an extruded plastic strip base 54 and parallel positive and negative electrodes 56A, 56B which are themselves configured in the form of extruded strips and held within elongate slots 58 formed in the base 54, and which, in the present embodiment each comprise nickel-plated copper. As can best be seen at Figure 6B, which shows a busbar 52 in cross section, the busbar 52 includes respective pairs of retainers 55 which are integrally formed with the base 54 and project outwardly therefrom in converging planes, the retainers 55 in each pair engaging opposed longitudinal edges of a respective one of the electrodes 56A and 56B. Each busbar 52 is formed by a process of cross-head extrusion, of both the metal and plastic, and subsequent cooling during which differing coefficients of contraction of the plastic and metal give rise to frictional forces therebetween, which forces hold the electrodes 56A, 56B to the base 54. The base 54 can be configured with a longitudinal notch 57 through which an element, such as a screw, nail or pop-rivet which fastens the busbar 52 to a given rear panel 13 is directed. Each busbar may, alternatively, be mounted to the respective rear panels 13 via double-sided tape received between a reverse side of the base 54 and those panels. Alternatively, each busbar may be supplied with adhesive pre-applied to an underside thereof and a peel-off strip the removal of which exposes the adhesive to permit adhesion of the underside to the panels 9.

A switch mode transformer/rectifier unit 60, having connectivity to mains power 62 (via a

general purpose outlet), is arranged between adjacent ones of the feet 11 and is electrically coupled to lower ends of the electrodes 56A, 56B of each busbar 52 via flyleads 64. As will be clear from Figure 3, the unit 60 and flyleads 64 are arranged so as to be covered by the kicker panels 15 and lowermost ones of the shelves 5 (to which lowermost shelves lighting is not applied) received adjacent upper ends of those panels and upper ends of the feet 11, whereby to be concealed when the display unit 1 is assembled.

Installation of the system 50 additionally comprises equipping each of respective ones of the shelves 5 and each of the rack units 7 with lighting circuitry which, when the shelf 5 or rack unit 7 is mounted to the support structure 3, engages one of the busbars 52 so as to be electrically coupled to the power supply. The circuitry as applied to each shelf 5 comprises a self-adhesive LED strip 30 attached to the underside of the shelf 5 adjacent a front edge thereof, an electrical connector unit 32 mounted to an underside of the shelf 5 adjacent a rear corner thereof, and a length of flat wire 34 mounted to the shelf underside and extending adjacent an end edge of the shelf 5, via which the unit 32 and an end of the strip 30 are interconnected, whereby to be electrically coupled. The unit 32, which will be described in further detail later, is positioned to engage one of the busbars 52 at each and every one of the possible positions at which the shelf 5 can be mounted to the support structure 3. Each rack unit 7, referring to Figure 5, is of the "waterfall' type and comprises an elongate bar 40, to opposite ends of which brackets 41 are fixed, and axially spaced apart rack members 43 projecting forwardly from the bar 40 and configured with formations 45 which are engageable with hooks 80 of clothes hangers 82 whereby garments fitted to the hangers 82 can be hung from the members 43. The lighting circuitry applied to each rack unit 7 comprises self-adhesive LED strips 30 each of which is applied to an underside of a respective rack member 43 so as to extend therealong, a connector unit 32 mounted to, or adjacent to, one of the brackets 41 of the rack unit 7, and a length of flat wire 34 attached to the underside of the elongate bar 40, so as to extend therealong, via which proximal ends of the strips 30 are electrically coupled to the unit 32. As is the case with each shelf 5 to which circuitry is applied, each rack unit 7 will be electrically coupled to the power supply, via engagement between the respective connector unit 32 applied thereto and a busbar 52, regardless of the position at which the rack unit 7 is mounted to

the support structure 3.

A view of the system 50, omitting details of the display unit 1 to which it is applied, is shown in Figure 4, from which it will be readily apparent that each shelf and rack unit to which lighting circuitry is applied will be positioned to receive power from one of the busbars 52 wherever it may be mounted.

Referring to Figures 7, 8A, 8B and 9A, each connector unit 32 comprises a pair of brass contact pins 36A, 36B, each pin comprising either raw brass or gold-plated brass (the latter being preferable, to minimise potential for corrosion), and a housing, comprising a moulded plastic mounting block 38, in which each pin is retained. Each of the pins 36A, 36B is housed by a respective elongate cavity 37 formed through the block 38 and is configured with a boss 33 having a diameter such that it forms a sliding fit inside the cavity 37. A helical compression spring 35 is received over the pin in the cavity 37 such that one end thereof abuts a radially inwardly extending shoulder 39 formed in the block 38 adjacent a first end thereof, and the other end thereof abuts the boss 33, whereby the pin is biased to a position in which a free end thereof projects from the cavity, beyond a second end of the block 38. A respective collar 31 is received, over the free end of each pin, in the respective cavity 37 adjacent the block second end, and is fixed relative to the block 38 whereby the respective pin free end is axially moveable with respect thereto. Each collar 31 is arranged to abut the boss 33 of the respective pin to preclude displacement of the pin, under the spring bias, with respect to the block 38 beyond a particular limit, as shown for pin 36A in Figure 8A. Each collar 31 may, without departure from the invention, be replaced with another motion-limiting or retaining component, such as a threaded nut or a positioning screw. Pushing of the free end of either pin in the direction towards the block 38 causes that pin to retract, against the spring bias, thereby effecting compression of the respective spring between the shoulder 39 and boss 33, as shown for pin 36B in Figure 8B. As shown in Figure 7, transmission wires 21A, 21B of the respective flat wire section 34 are connected to ends of the pins 36A, 36B, respectively, adjacent the first end of the block 38, whereby the pins are electrically coupled to the LED strips, via the flat wire sections 34.

Each connector unit 32 is mounted to the respective shelf 5 or rack unit 7 such that the pins 36A, 36B project rearwardly to abut the contact strips 56A, 56B, respectively, of one of the busbars 52 when the shelf/rack unit is mounted to the support structure 3 at any one of the possible mounting positions, whereby the pins 36A, 36B are forced, against the springs, in a direction towards the front of the shelf or rack unit during mounting, and thereafter remain in contact with the busbar conductive strips under the biasing forces exerted upon them by the springs.

Referring to Figures 8A and 8B, a given unit 32 mounted to a shelf 5 may be so mounted via a plastic spacer block 29 which is received against the underside of the item-supporting panel 6 of the shelf 5 and attached to the shelf underside via suitable means – e.g., screws and/or double-sided tape, the spacer 29 being dimensioned to support the unit 32 such that the pins 36A, 36B are spaced below the lower edge of a rear rim or wall 8 of the respective shelf. The block 38 may be configured with a locating through-hole 27 which aligns with a threaded hole formed in the spacer block 29, such that a screw (not shown) can be received through the aligned holes to hold the block 38 against the underside of the spacer block 29.

In one alternative mounting arrangement, shown in Figure 9A, where the rear edge section of each shelf 5 is configured with a flange or lip 12 which projects forwardly from the lower end of the shelf rear wall or an upright section of said rim 8, a given unit 32 mounted to a shelf 5 may be so mounted directly to that flange/lip 12, at an underside thereof, via suitable means - e.g., screws and/or double-sided tape, the spacing of the lip/flange 12 from the item-supporting panel 6 conveniently being such that the pins 36A, 36B are spaced below the lower edge of the rear wall 8 of the respective shelf. Again, the through-hole 27 may receive a screw (not shown) which is fitted so as to attach the unit 32 to the lip/flange 12.

Shown in Figures 9B and 9C are details of an alternative connector unit 32' of the system 50. The connector unit 32', like connector unit 32, comprises a pair of brass contact

pins (details of which are omitted from Figures 9B and 9C for clarity), each pin comprising either raw brass or gold-plated brass, and a housing, comprising a moulded plastic mounting block 38'. Each of the pins is housed by a respective elongate cavity 37' of substantially the same configuration as each cavity 37. Each pin has substantially the same configuration as the pins 36A, 36B. A helical compression spring, of the same configuration as each spring 35, is received over each pin in the cavity 37 such that one end thereof abuts a radially inwardly extending shoulder formed in the block 38' adjacent a first end thereof, the shoulder being the same configuration as each shoulder 39, and the other end thereof abuts a boss, of the same configuration as each boss 33, whereby the pin is biased to a position in which a free end thereof projects from the cavity, beyond a second end of the block 38'. A respective collar 31' is received in each cavity 37' adjacent the block second end in a manner such that it is fixed relative to the block 38'. Each collar 31' is received over, i.e. surrounds, the free end of each pin. Each collar 31', unlike collars 31, projects beyond the block second end and is configured with opposed axial slots 31A whereby it can deform when the connector unit 32' is installed, as will be described in further detail later. Each collar 31', like the collars 31, is arranged to abut the boss of the respective pin to preclude displacement of the pin, under the spring bias, with respect to the block 38' beyond a particular limit, consistent with the unit 32. The pins are of sufficient length that distal sections of the free ends thereof project beyond distal ends of the collars 31'.

The block 38' further comprises a locating through-hole 27' which, unlike the hole 27, extends parallel to the cavities 37', and will be described in further detail later.

The block 38', like the block 38, includes an abutment surface 38A, which faces upwardly to be received against the underside of the item-supporting panel of a shelf 5 when the unit 32' is applied to that shelf. The block 38' additionally comprises a further abutment surface 38B, through which the locating through-hole 27' opens and which faces in a direction parallel to the cavities 37', so as to be received against a forwardly facing surface of a rear rim or wall 8 of the shelf. A relief 38C is defined between the surfaces 38A and 38B whereby those surfaces can be received against the panel underside and wall front

surface, respectively, without obstruction by a radiused inner face of the shelf at a junction between the panel 6 and wall 8.

The block 38' is additionally configured, on opposed side walls of a front portion thereof, with axial slots 38D, via which it can be mounted to a protective casing, as will be described in further detail later.

The portions of the collars 31' which project beyond the face 38B can vary according to the thickness of the wall section 8, as exemplified by Figure 9D, in which those lengths are shown to be less.

The manner in which the unit 32' is mounted to a shelf 5 is depicted, in sequential fashion, in Figure 9E. Formed through the wall 8, adjacent an end thereof, are two holes 8A, each of which receives a respective collar 31', and a further hole 8B, between the holes 8A, which, when the collars 31' are received in the holes 8A, aligns with the hole 27', whereby a threaded fastener, as described above, can be received through the holes 8B and 27' to secure the unit 32' to the shelf 5. When the unit 32' is so secured, the surfaces 38A and 38B abut the aforementioned panel underside surface and rear wall forwardly facing surface respectively. Adhesive may be applied to either or each of the surfaces 38A and 38B (as is also the case with the abutment face of the block 38), in place of or in addition to the threaded fastener, to mount the unit to the shelf. The aforementioned slots 31A permit transverse and/or radial deformation of the collars 31' as they are introduced through the holes 8A, such that the collars 31' fit snugly within the holes 8A, the lengths of the rearwardly projecting portions of the collars 31' being such that distal ends of those portions project slightly beyond, or terminate flush with, the rearwardly facing surface of the wall 8 when the unit 32' is mounted.

The trailing ends of the pins in the unit 32' connect to the transmission wires 21A, 21B in an identical manner to those of the pins 36A, 36B of the unit 32.

Shown in Figure 9F is a casing 91 which can be applied to the unit 32' so as to shroud the

connections between the transmission wires 21A, 21B and the unit 32'. The casing 91 comprises a front wall 92, side walls 93, which project rearwardly from opposite upright edges of the front wall 92, and a bottom wall 94, which projects rearwardly from a bottom edge of the front wall 92. The casing opens rearwardly and upwardly and is configured with opposed axial ribs 95 which project laterally inwardly from inner faces of the side walls 93 to be slidably receivable in the slots 38D upon introduction of the front end of the block 38' through the open rear end of the casing 91. Laterally outer sections of a rear portion of the block 38' project laterally outwardly so as to abut upright rearward edges of the side walls 93 once the front portion of the block 38' has been fully received in the cavity defined by the casing 91, the abutting laterally outer sections and upright edges defining stoppers which locate the unit 32' with respect to the casing 91. The rear wall 92 and side walls 93 of the casing 91 are configured so as not to interfere with the mounting of the unit 32' to the shelf 5 (as previously described), whereby the casing 91 may be fitted to the unit 38', either before or after that mounting is effected. More particularly, the upper edges of the side walls 93 are arranged so as to be substantially flush with the abutment face 38A of the block 38 when the casing 91 is fitted to the block 38'. The rear wall 92 of the casing 91 is configured with a centrally disposed, upwardly opening cut-out 96, portions of the rear wall 92 to either lateral side of that cut-out having upper edges which are flush with the upper edges of the side walls 93. The cut-out 96 is dimensioned so as to be able to receive the flatwire section 34/transmission wires 21A, 21B therethrough when the casing 91 is fitted to the block 38' and the latter is mounted to a shelf in the manner previously described.

It will be appreciated that each of the connectors 32 may likewise, if required, be provided with a casing and appropriately configured to interengage with that casing.

The product display unit may include, in addition or as an alternative to shelves and/or rack units as described above, at least one wire shelf 5' as shown in Figures 10A to 10C, in which case a said unit 32' is mounted to that shelf 5' via an adapter 100. The adapter 100 comprises, at a rear end thereof, a substantially upright plate section 102 and, extending from an upper end of the plate section 102, a curved portion having an inverted U-shaped

cross-sectional configuration, defining a downwardly opening catch or hook section 104 receivable over an upper edge of an upwardly projecting rear wall section 8' of the shelf 5', such that the adapter 100 attaches to the shelf 5'. The adapter 100 additionally comprises an angle member 106 which projects forwardly from a lower portion of the plate section 102 so as to extend substantially the length of the lateral side of the shelf 5' adjacent to which it is positioned, the angle member 106 comprising a laterally outwardly disposed upright wall portion or skirt 108 and a roof portion 110 which projects laterally inwardly from an upper edge of the portion 108 so as to be received adjacent or against undersides of individual wire members forming part of the shelf 5'. The adapter 100 may be sufficiently rigid that the angle member 106 is supported, in a cantilever fashion, only from the section 102, hung by hook portion 104, whereby to lie adjacent or against the undersides of the wire sections, or may instead be appropriately configured so as to engage the shelf 5' at at least one position therealong whereby to be held satisfactorily adjacent or against the underside of the shelf 5'. A lower end of the plate section 102 projects downwardly beyond a lower end of the angle member 106, thereby defining a flange or tongue 112 which is configured with holes 8A' and 8B' which correspond with the holes 8A and 8B respectively. The wall section 110 defines a portion which corresponds to the item-supporting panel 6 of the shelf 5, against a downwardly facing surface of which the surface 38A is received when the unit 32' is fitted to the adapter 100. When the unit 32' is so fitted, the transmission wires 21A, 21B/flat wire section 34 (extending to the LED strip applied to the front edge section of the shelf 5') can be attached to the underside of the wall section 110, in the same manner as they can be to the underside of the panel 6, as previously described. The wall section or skirt 106 lies laterally outward of and adjacent the unit 32', thereby defining a guard which provides protection to the unit 32' and, if casing 91 is not applied thereto, additionally provides protection to the connection between the unit 32' and the transmission wires 21A, 21B/flatwire section 34. The tongue portion 112, through which the collars 31' extend, corresponds to the wall section 8, defining a forwardly facing surface against which the surface 38B of the unit 32' is received when that unit is mounted to the adapter 100. The wall section/skirt 106 also provides a side barrier protecting the flatwire section 34.

The collars 31', and in particular the portions thereof which extend through the holes 8A, insulate the pins, thus electrically isolating them, from the shelf 5. Similarly, if the adapter 100 is formed from metal, those collars/portions similarly insulate/isolate the pins from the adapter 100 and, in turn, the shelf 5'. The adapter, may, on the other hand, be formed from plastic, thereby itself providing electrical isolation between the pins and the shelf 5'. Advantageously, the collars 31', in addition to providing the electrical isolation, cooperate with the holes/openings to locate the unit during mounting and provide support to the unit once mounted.

It will be noted that, in the arrangements shown in Figures 9E and 10A to 10C, the pins of the unit 32' project through the shelf rear wall or through a rear wall portion of an adapter applied to the shelf. In each instance, the transmission wires 21A, 21B/flatwire section 34 connect(s) to the LED strips (not shown) applied to the front edge portions of the shelves.

The output of the unit 60 is 24 volts DC, as is typical, though it will be appreciated that a different voltage output is possible without departure from the invention. The unit 60 may be replaced with a DC battery, such as a lithium-ion (e.g. lithium ferrous phosphate ($LiFePO_4$)) battery, without departure from the invention.

The LED lighting may be any of a number of types without departure from the invention. For example, it may comprise red-green-blue (RGB) and/or one or more types of white LED lighting. The LED lighting may vary to produce differing beam spread angles without departure from the invention. In the present embodiment, the lighting comprises LED strip lighting, which may be mounted to the shelf 5/rack member 43 via self-adhesive aluminium heat dispersal tape. The LED lighting as applied to each shelf 5 is positioned such that the light it generates is cast so as to accentuate items positioned on an adjacent one of the shelves mounted therebelow. (However, in another embodiment of the invention, the lighting as applied to a given shelf 5 may be positioned so as to be cast upwardly, thereby accentuating one or more items on that shelf; e.g., the item-supporting panel of each shelf may be able to allow passage of light therethrough from the lighting applied to the underside of the shelf to a position occupied by one or more items on the

shelf panel. To this end, each shelf panel may be translucent, transparent or apertured.)

Referring to Figure 5, the positioning of the LED strips on the rack members 43 is such that light is cast downwardly therefrom to accentuate a garment hung from the rack member 43 via a hanger 82.

Each of the flat wire sections 34 and flyleads 64 may, like each LED strip, be adhesively mounted, e.g. via double-sided tape, or adhesive pre-applied thereto and exposed following removal of a peel-off strip therefrom.

A circuit diagram 100 of the system 50 is shown in Figure 11. It will be appreciated that one or more of the shelves or rack unit 7 may be equipped with alternative lighting which does not comprise strip LED lighting. The alternative lighting may, for example, comprise one or more downlights.

Shown in Figure 12 are details of how each LED strip light 30 is electrically coupled to a respective connector unit 32 of the system. As previously mentioned, each LED strip 30 is electrically coupled to a respective connector unit 32 via a length of flat wire 34 attached to the underside of the shelf 5 or rack unit elongate bar 40. Provided at the end of the flat wire 34 adjacent the respective unit 32 is a PCB connector 71, being a T-form connector, attached to the said end by an automated welding and insulation manufacturing process, giving rise to an "insulation enclosure zone" 73, within which is contained a weld 74, facilitating ease of on-site retro-fitting of the system. The PCB connector 71 comprises an exposed PCB connection 78 to the pin block defined by unit 32. Similarly, at the end of the flat wire 34 adjacent the strip 30, there is provided a PCB connector 75, being either a "stepped width" (shown) or "parallel-sided" (not shown) aligned connector, which is attached to that end also by an automated welding and insulation manufacturing process, which also gives rise to an "insulation enclosure zone" 76, in which there is contained a weld 77, again facilitating ease of on-site retro-fitting of the system. The connector 71 is used to form a permanent welded and insulated bond with the self-adhering taper wire flylead 34, facilitating aligned mechanical connection with the unit 32. The connector 75

is used to form a permanent welded and insulated bond between the flylead 34 and any specified LED strip lights 30.

The display unit may alternatively comprise a gondola-type unit, a cross-sectional elevation view of a bottom part of which is shown in Figure 14, having a support stand and shelves mounted on opposite sides of the support stand, to each of which the system is applied. The transformer/rectifier unit may be disposed between adjacent central legs of the support stand (circled in Figure 14) and the flyleads arranged in voids (boxed in Figure 14) which are covered by kicker panels and lowermost ones of the shelves or other configurations such as joinery, whereby to be concealed/shielded.

It is to be appreciated that the invention is not limited to providing display units with LED lighting or, for that matter, lighting *per se*. In alternative embodiments of the invention, the powered system may include, instead of, or in addition to the LED strips as described above, any one or more of the following:

- individual lights, such as single LED lights, applied to ones of the shelves and/or racks, which, like the LED strips, may provide accent lighting, attract and focus attention and/or act as safety zone or warning lights;
- fans, such as self-contained fans, to blow air onto items being displayed and/or to drive another powered utility of the system provided to ones of the shelves or rack units;
- flutter tubes or tinsel tape, movement of which may also be driven by fans as mentioned above;
- light sheets, e.g. to provide background lighting to static print display media and/or to provide muted ambient light; and
- power outlets, such as USB outlets, to which rechargeable and/powerable items being displayed can be connected, e.g. via a USB cable, so as to be recharged or maintained in a charged condition and/or powered.

While various embodiments of the present invention have been described above, it should be understood that they have been presented by way of example only, and not by way of

limitation. It will be apparent to a person skilled in the relevant art that various changes in form and detail can be made therein without departing from the spirit and scope of the invention. Thus, the present invention should not be limited by any of the above described exemplary embodiments.

Throughout this specification and the claims which follow, unless the context requires otherwise, the word "comprise", and variations such as "comprises" and "comprising", will be understood to imply the inclusion of a stated integer or step or group of integers or steps but not the exclusion of any other integer or step or group of integers or steps.

The claims defining the invention are as follows:

1. A method of configuring an item display structure with electrically powered functionality, the item display structure comprising a first support and at least one second support which is mountable to the first support at any one of selectable positions so as to be able to hold at least one item such that the item is displayed, the method comprising:

applying to the first support electrical contacts ("first support contacts") which are electrically coupled to a power source or able to be so coupled; and

configuring the or each second support with a powered utility, including applying to that second support electrical contacts ("second support contacts") such that, when that second support is mounted to the first support, each second support contact engages a respective one of the first support contacts, irrespective of the position at which that second support is so mounted, whereby the powered utility is operable by the power source.

2. A method according to claim 1, being one in which the powered utility is retrofitted to the display structure.

3. An item display structure configured with electrically powered functionality via a method according to claim 1 or 2.

4. An item display structure configured with electrically powered functionality, the item display structure comprising a first support and at least one second support which is mountable to the first support at any one of selectable positions so as to be able to hold at least one item such that the item is displayed, wherein the first support is provided with electrical contacts ("first support contacts") which are electrically coupled to a power source or able to be so coupled, and the or each second support is provided with a powered utility which includes electrical contacts ("second support contacts") which are arranged such that, when that second support is mounted to the first support, each second support contact engages a respective one of the first support contacts, irrespective of the position at which that second support is so mounted, whereby the powered utility is operable by the power source.

5. A display structure according to claim 4, being of modular construction.

6. A method or display structure according to any one of the preceding claims, wherein said positions comprise ones which are spaced apart.

7. A method or display structure according to any one of the preceding claims, wherein the display structure comprises a plurality of said second supports mountable to the first support at ones of said positions.

8. A method or display structure according to any one of the preceding claims, wherein at least one said second support comprises a shelf.

9. A method or display structure according to any one of the preceding claims, wherein at least one said second support comprises a rack.

10. A method according to claim 9, wherein the or each rack is a garment-hanging rack.

11. A method or display structure according to any one of the preceding claims, wherein the powered utility with which at least one said second support is configured comprises lighting.

12. A method or display structure according to claim 11, wherein the lighting is arranged along an edge of the/each second support.

13. A method or display structure according to any one of the preceding claims, wherein the powered utility with which at least one said second support is configured comprises a mechanical utility.

14. A method or display structure according to any one of the preceding claims,

wherein the powered functionality is for accenting/accentuating the item(s) held by the second support(s).

15. A method or display structure according to any one of the preceding claims, wherein each of the two first support contacts is dimensioned sufficiently to be engaged by a respective one of the second support contacts when the or each second support is mounted at any one of said positions.

16. A method or display structure according to any one of the preceding claims, wherein the first support contacts are linear and elongate.

17. A method or display structure according to any one of the preceding claims, wherein the or each second support is configured such that the second support contacts are resiliently biased into conditions in which they engage respective ones of the first contacts when that second support is mounted at a said position.

18. A method or display structure according to claim 17, wherein each second support contact is spring-biased.

19. A method or display structure according to any one of the preceding claims, wherein mounted to the or each second support is an electrical connector unit comprising a housing and said second support contacts which are mounted in the housing.

20. A method or display structure according to claim 19, wherein the or each connector unit includes springs each of which resiliently biases a respective one of the contacts in the housing thereof into a condition in which it engages a respective one of the first contacts when the respective second support is mounted at a said position.

21. A method or display structure according to claim 19 or 20, wherein each second support contact is arranged so as to extend through a portion of the respective second support so it can engage a respective said first support contact.

22. A method or display structure according to claim 21, wherein the or each said portion comprises a rear wall portion.

23. A method or display structure according to claim 21 or 22, wherein each second support contact is arranged to extend through an opening through said portion.

24. A method or display structure according to claim 23, wherein the or each unit includes insulating cover portions through each of which a distal end of a respective said second support contact extends, and the cover portions are arranged to extend through the openings whereby to isolate the distal ends from said portion.

25. A method or display structure according to any one of the preceding claims, wherein each second support contact comprises a pin.

26. A method or display structure according to any one of the preceding claims, wherein the first support comprises a support stand.

27. A method or display structure according to any one of the preceding claims, wherein the first and/or second support contacts are positioned away from locations at which the first and second supports interengage when the former is/are mounted to the latter.

28. A method or display structure according to claim 27, wherein the first and second supports have connectors which are interengageable at said locations.

29. A method or display structure according to any one of the preceding claims, wherein the first support contacts are applied to panelling or an upright of the first support against or adjacent to which the or each second support is received when mounted to the first support at a said position.

30. A method or display structure according to any one of the preceding claims,

wherein at least one said second support comprises a shelf and an adapter fitted or mounted to the shelf, and a respective said electrical connector unit is fitted or mounted to said adapter whereby to be mounted to the shelf.

30. A method or display structure according to any one of the preceding claims, wherein the first support contacts comprise at least one pair of contacts forming part of a bus bar.

31. A bus bar comprising an elongate base and parallel elongate electrodes held within slots formed in the base.

32. A bus bar according to claim 31, wherein the base and electrodes are coextruded from plastic and metal respectively.

33. A bus bar according to claim 31 or 32, including respective pairs of retainers which are integrally formed with the base and project outwardly therefrom in converging planes, the retainers in each pair engaging opposed longitudinal edges of a respective one of the electrodes.

34. An adapter for mounting an electrical connector unit or assembly to a shelf, the adapter being configured such that it can be fitted or mounted to the shelf and such that said unit can be fitted or mounted to it.

35. An adapter according to claim 34, comprising connecting means engageable with the shelf to hold the adapter to the shelf.

36. An adapter according to claim 35, wherein the connecting means is engageable with an upwardly projecting wall portion of the shelf such that the adapter depends from the portion of the shelf.

37. An adapter according to claim 35 or 36, wherein the connecting means is

configured in the form of a hook or catch.

38. An adapter according to any one of claims 34 to 37, comprising a roof portion receivable against an underside of the shelf, an underside of which roof portion is arranged for receipt of a said connector unit thereagainst when the connector unit or assemblyt is fitted or mounted to the adapter.

39. An adapter according to any claim 38, wherein the roof portion is configured in the form of a strip or plate.

40. An adapter according to claim 38 or 39, further comprising a side wall portion which projects downwardly from the roof portion.

41. An adapter according to claim 40, wherein the side wall portion is configured in the form of a strip or plate.

42. An adapter according to claim 40 or 41, comprising an angle member defining said roof portion and side wall portion.

43. An adapter according to any one of claims 34 to 42, comprising a mounting section arranged for receipt of the connector unit thereagainst when the connector unit or assembly is fitted or mounted to the adapter.

44. An adapter according to claim 43, wherein the mounting section is defined by a tongue or flange.

45. An adapter according to claim 43 or 44, wherein the mounting section is configured with at least one opening, the or each opening being arranged such that a respective said contact of the unit extends therethrough when said unit or assembly is fitted or mounted to the adapter.

46. An adapter according to claim 45, wherein the or each opening is configured for snug receipt of an insulative cover portion or collar of the unit through which the respective contact extends.

47. An assembly comprising an adapter according to any one of claims 34 to 46 and:

said electrical connector unit or assembly, which is fitted or mounted to said adapter; and/or

said shelf, to which the adapter is fitted or mounted.

48. An electrical connector unit, for providing electrical connection to at least one contact provided on a first support ("first support contact"), the unit comprising a housing, which is mountable to a second support that can be mounted to the first support, and at least one contact ("second support contact") mounted within the housing, the or each second support contact being resiliently biased towards a condition in which it can engage a respective said first contact when the housing is mounted to the second support and the second support is mounted to the first support.

49. An electrical connector unit according to claim 48, including at least one spring mounted within the housing, the or each spring biasing a respective said second support contact towards said condition.

50. An electrical connector unit according to claim 48 or 49, wherein the housing comprises a plastic block.

51. An electrical connector unit according to any one of claims 48 to 50, including at least one insulating cover portion through which a distal end of a respective said second support contact extends, the or each cover portion being arranged to extend through an opening through a portion of the second support whereby to isolate the distal end from said portion of the second support.

52. A said second support, for use in the item display structure according to any one of

claims 3 to 30, to which said second support contacts are applied or which is provided with a said powered utility including said second contacts.

53. A said first support, for use the item display structure according to any one of claims 3 to 30, to which said first support contacts are applied or which is provided with said first support contacts.

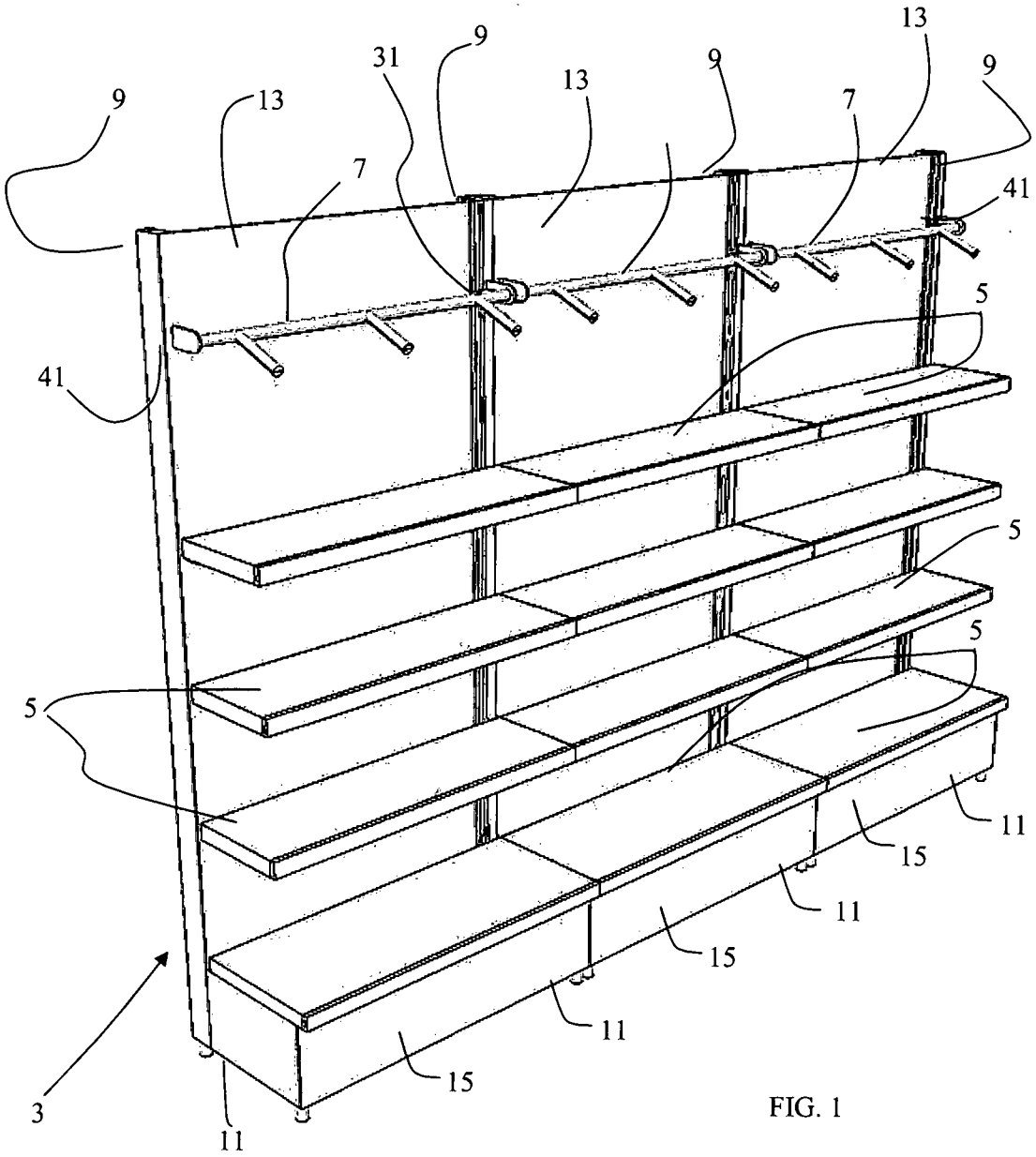

FIG. 1

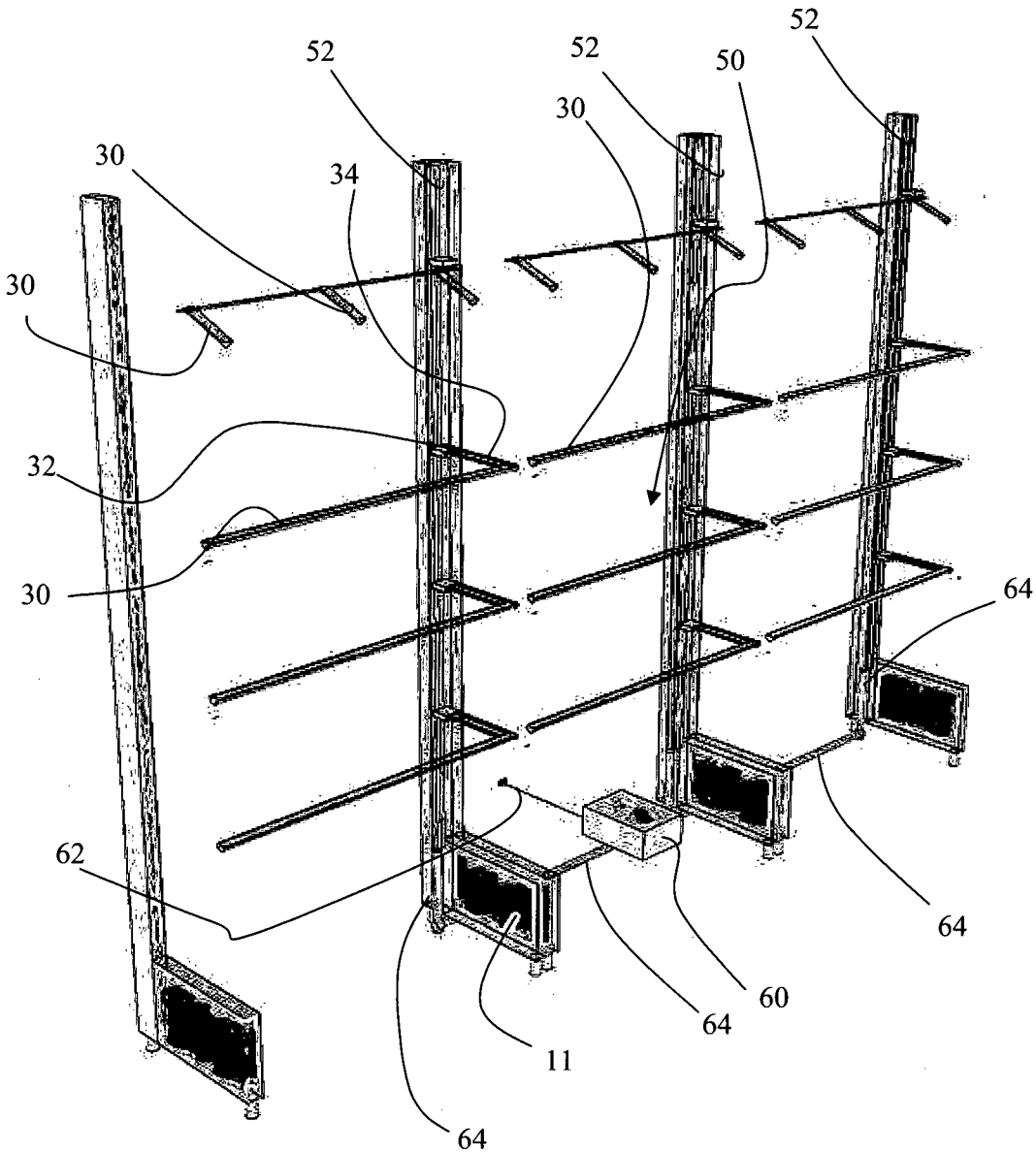

FIG. 2

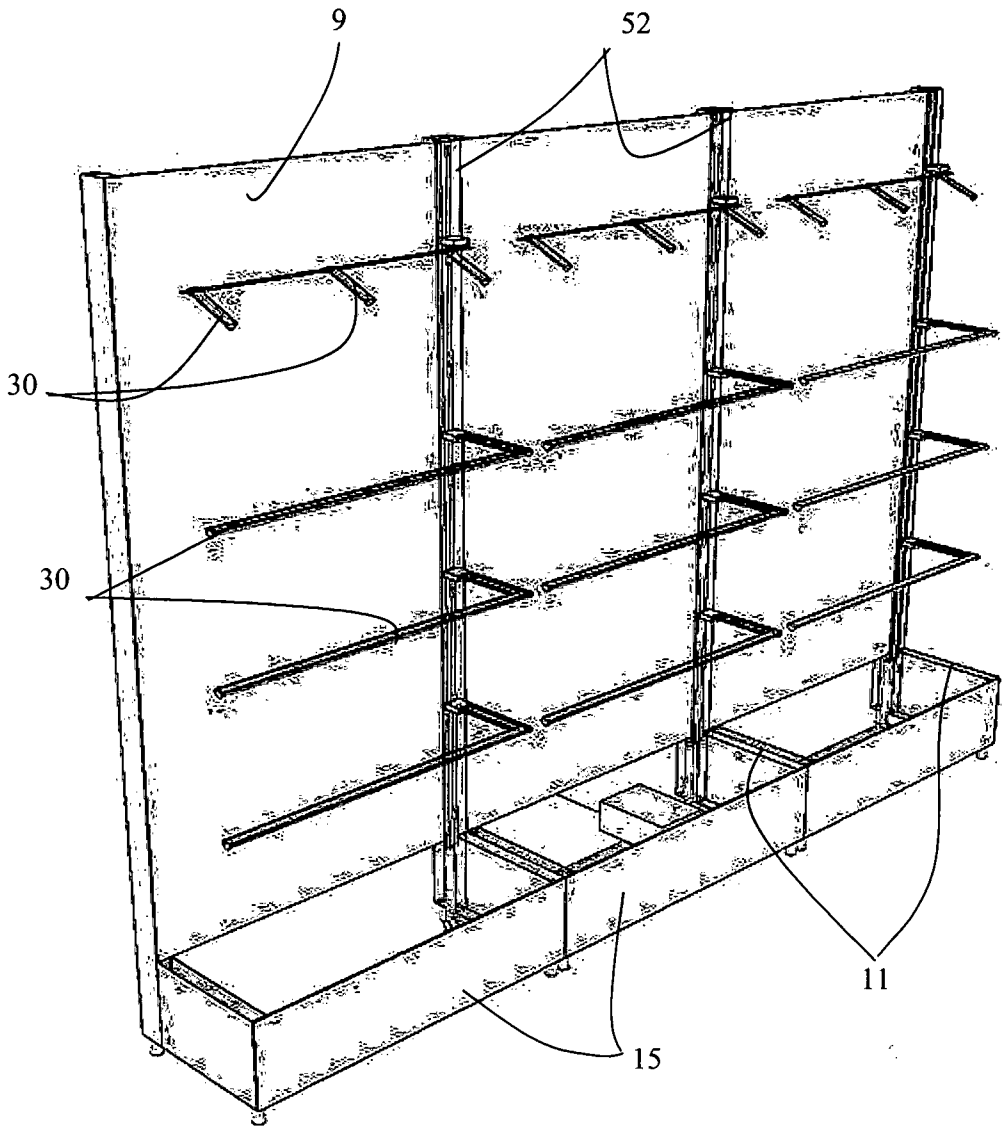

FIG. 3

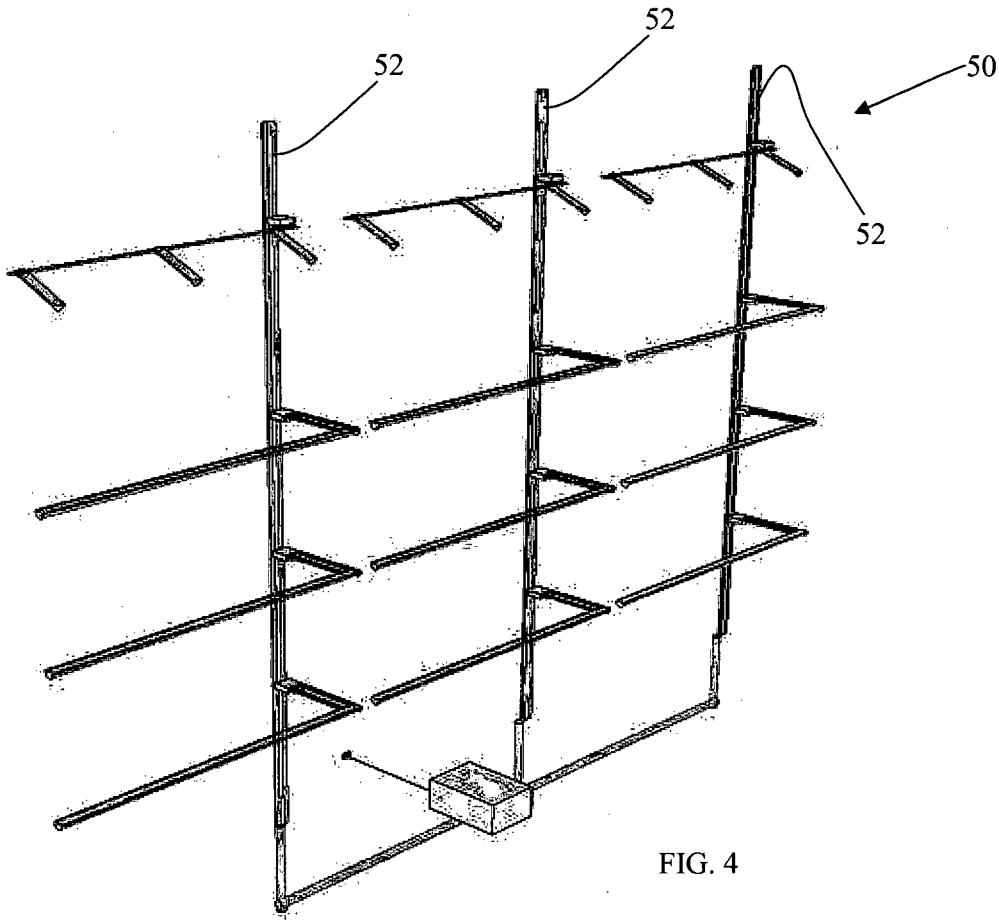

FIG. 4

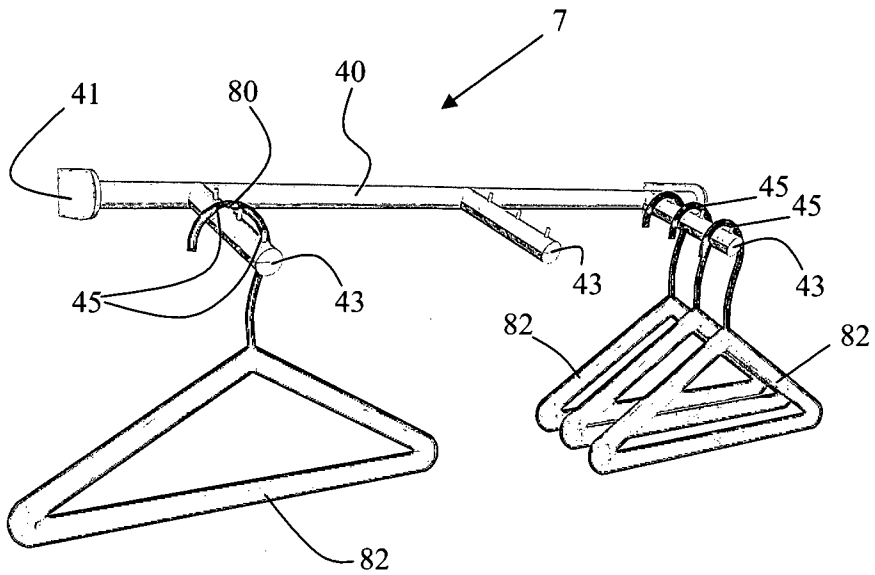

FIG. 5

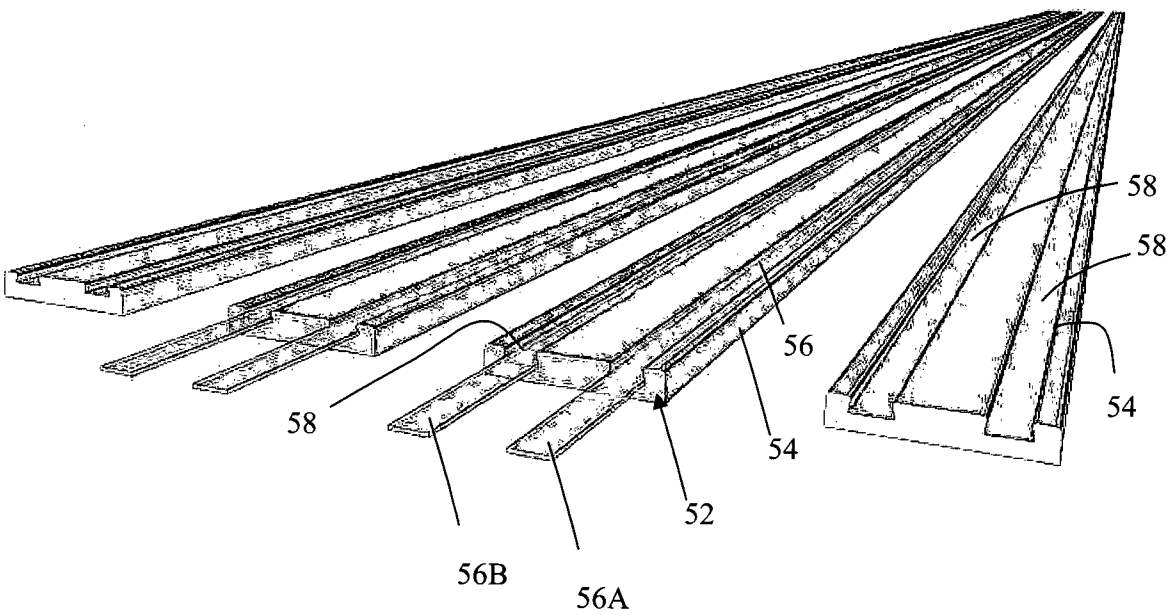

FIG. 6A

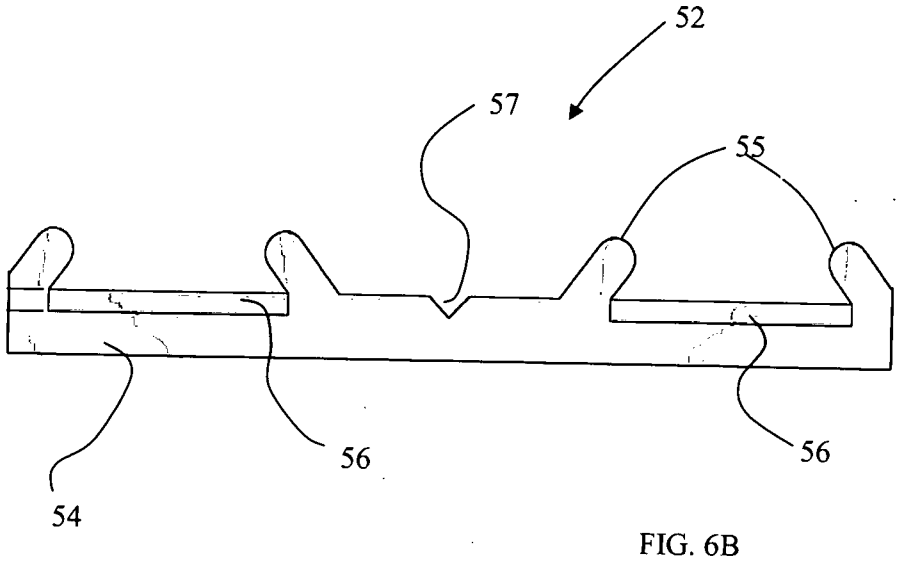

FIG. 6B

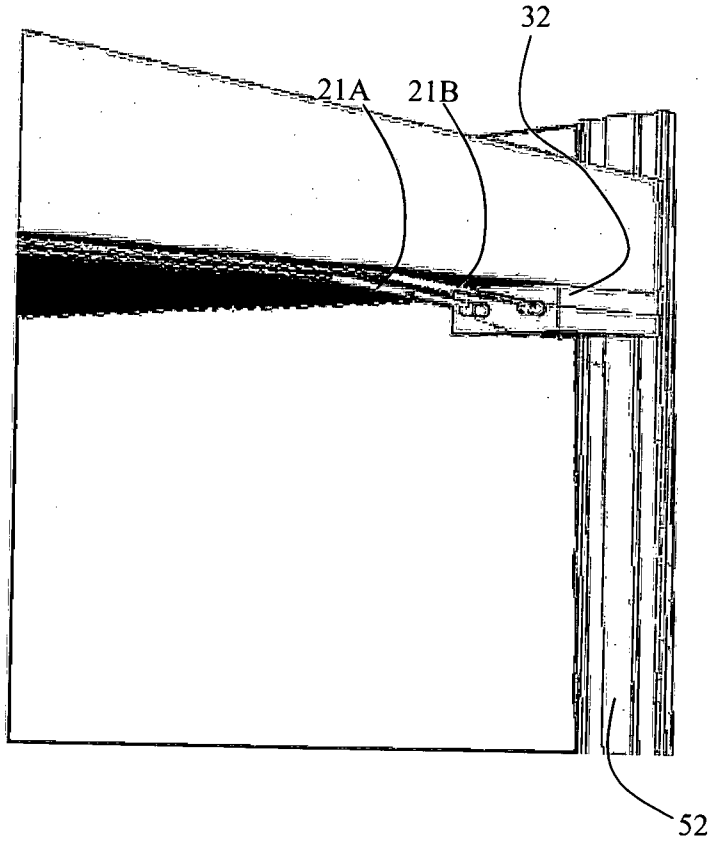

FIG. 7

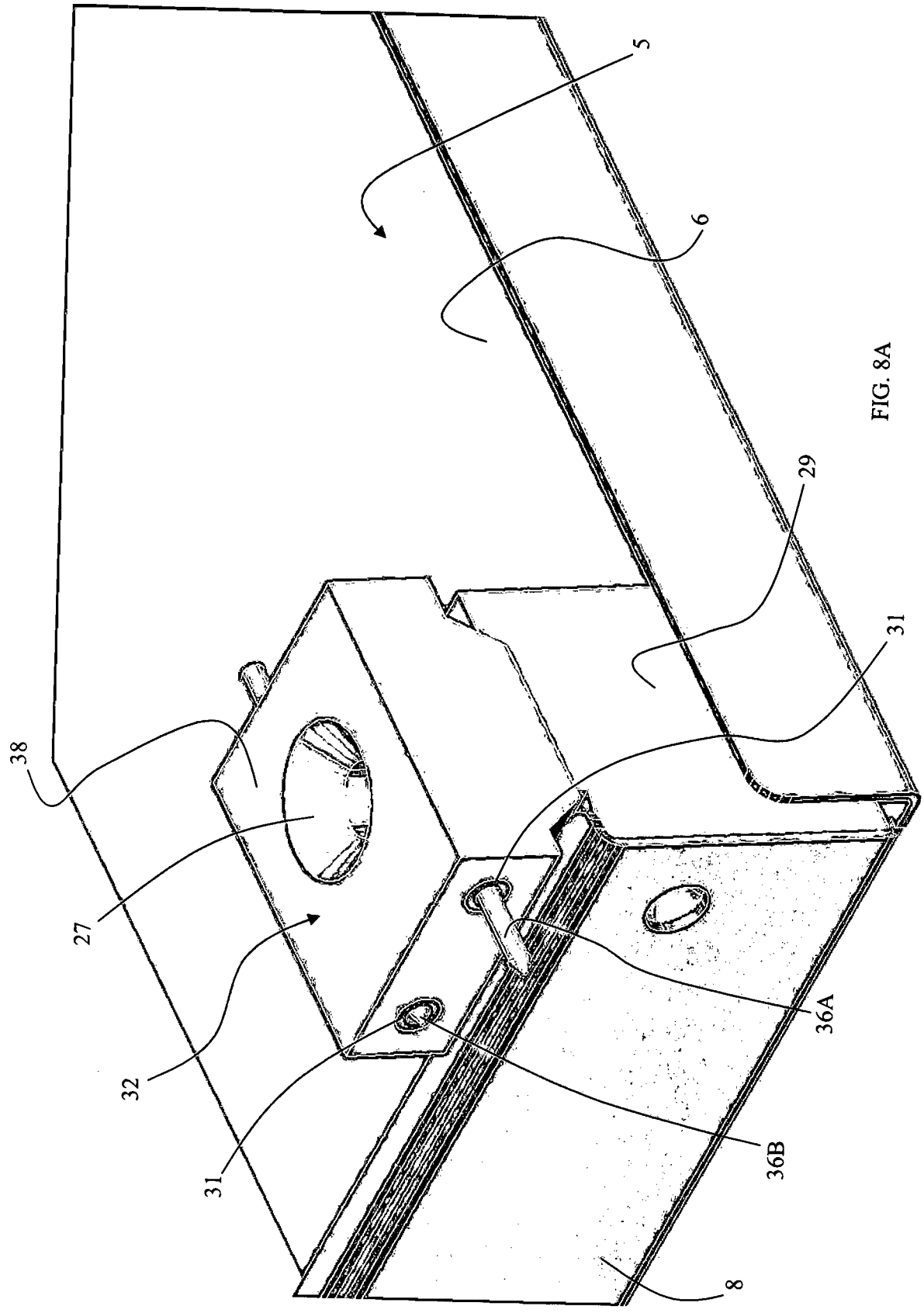

FIG. 8A

W

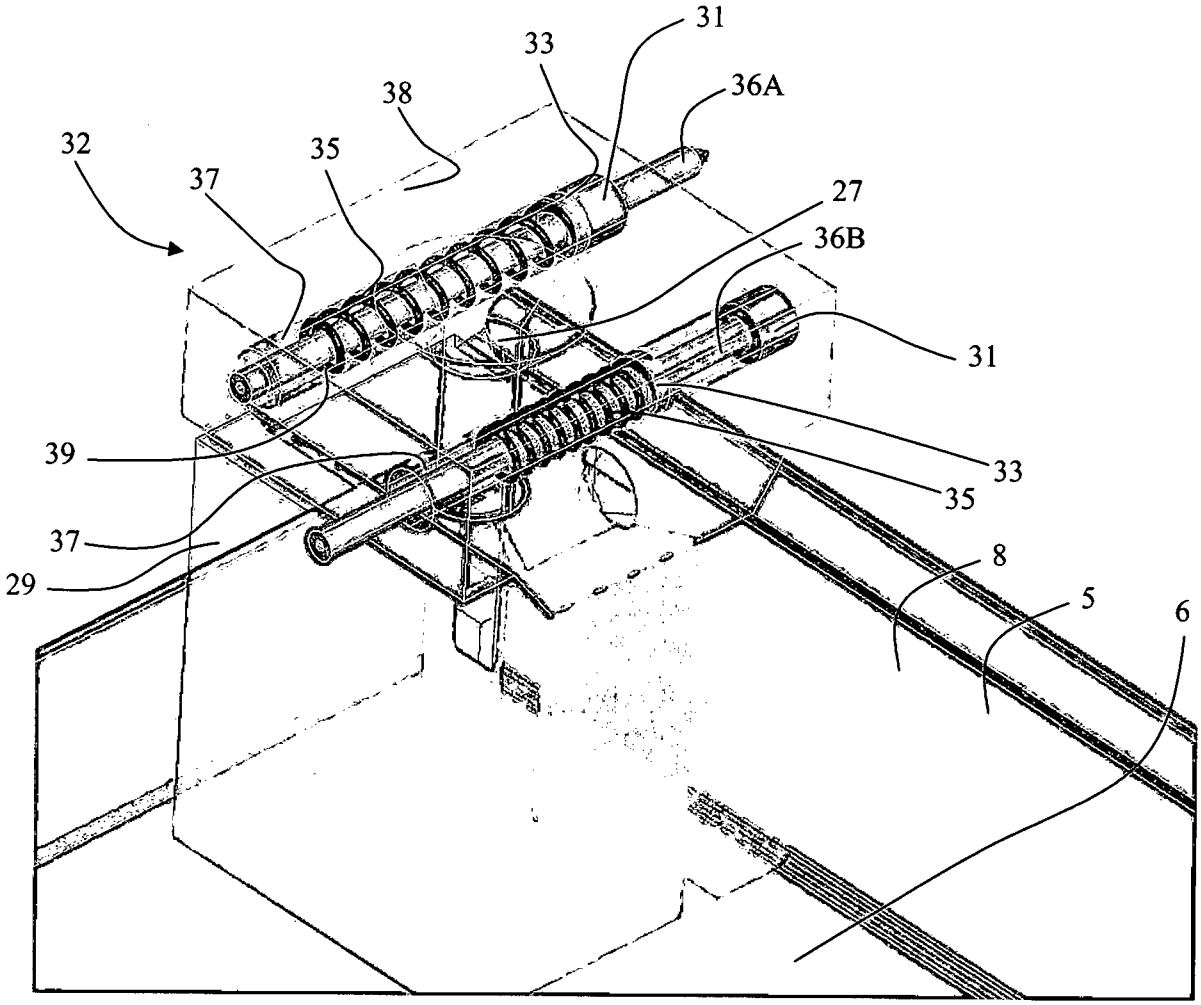

FIG. 8B

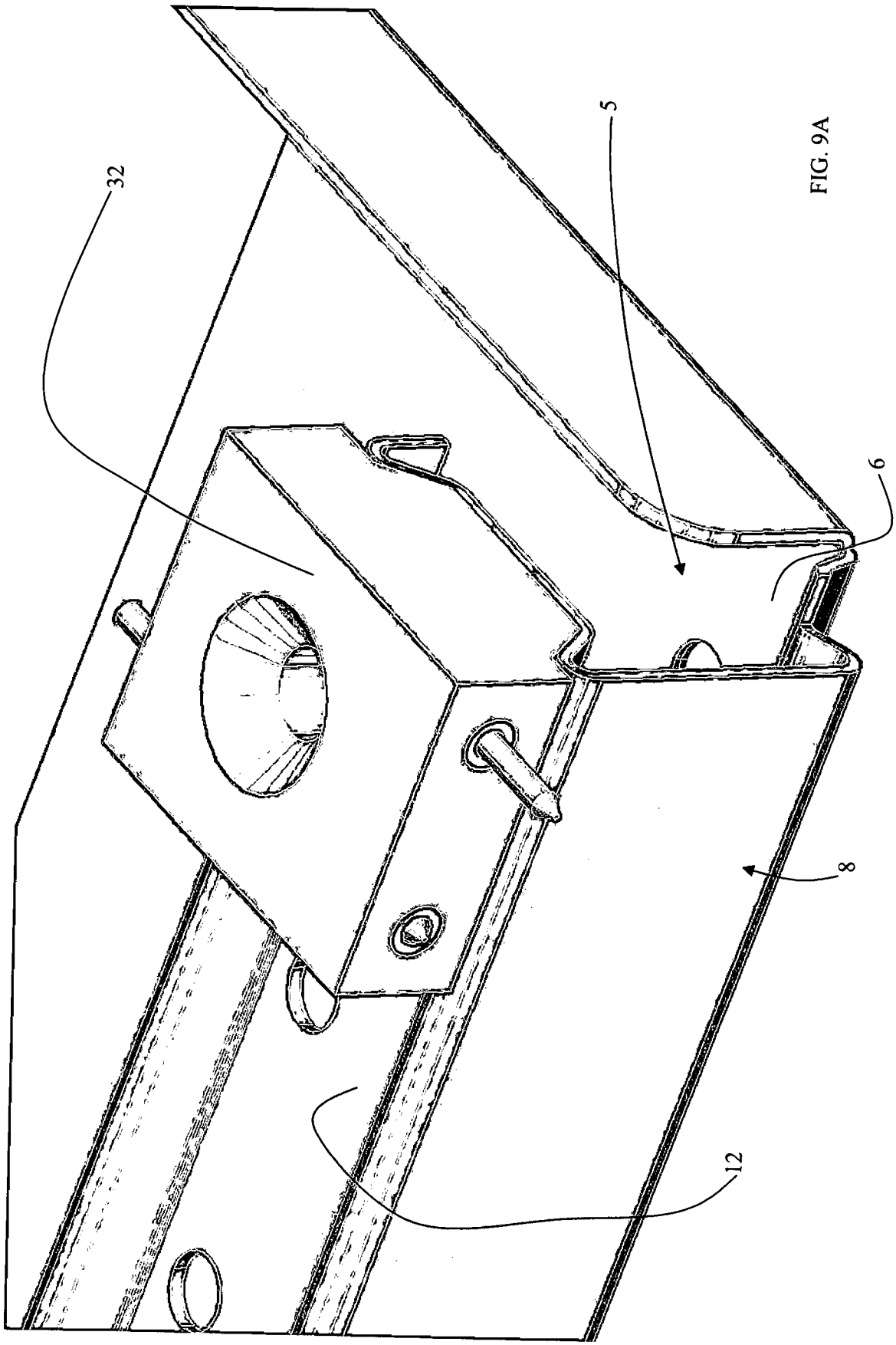

FIG. 9A

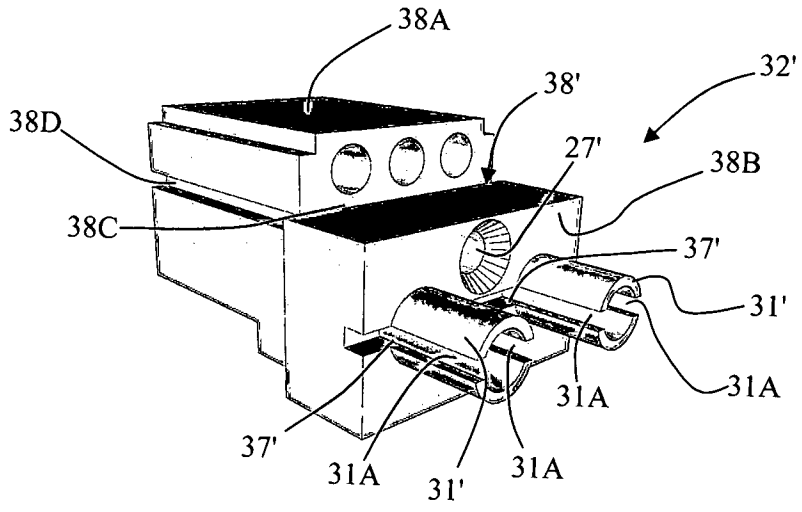
38A
38'
32'
38D
27'
38B
38C
37'
31'
31A
31A
37'
31A
31'
31A

FIG. 9B

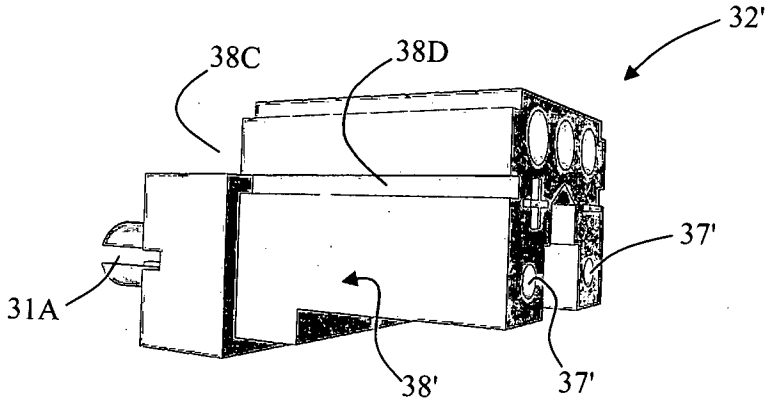
32'
38C
38D
37'
31A
38'
37'

FIG. 9C

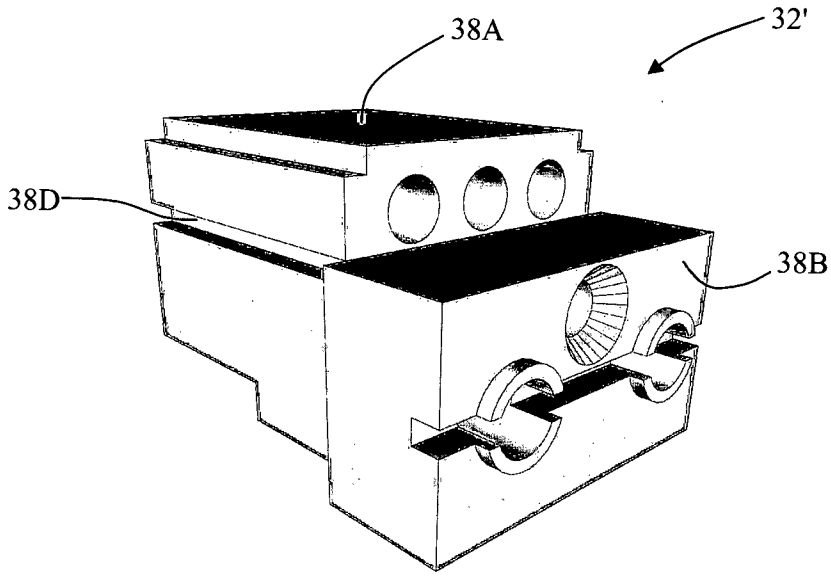

FIG. 9D

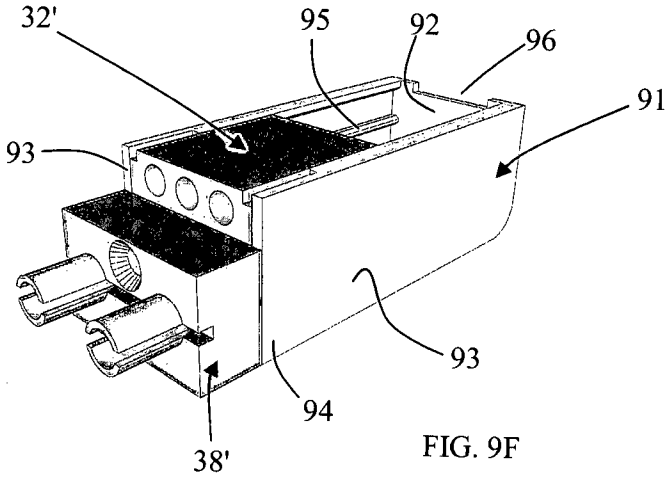

FIG. 9F

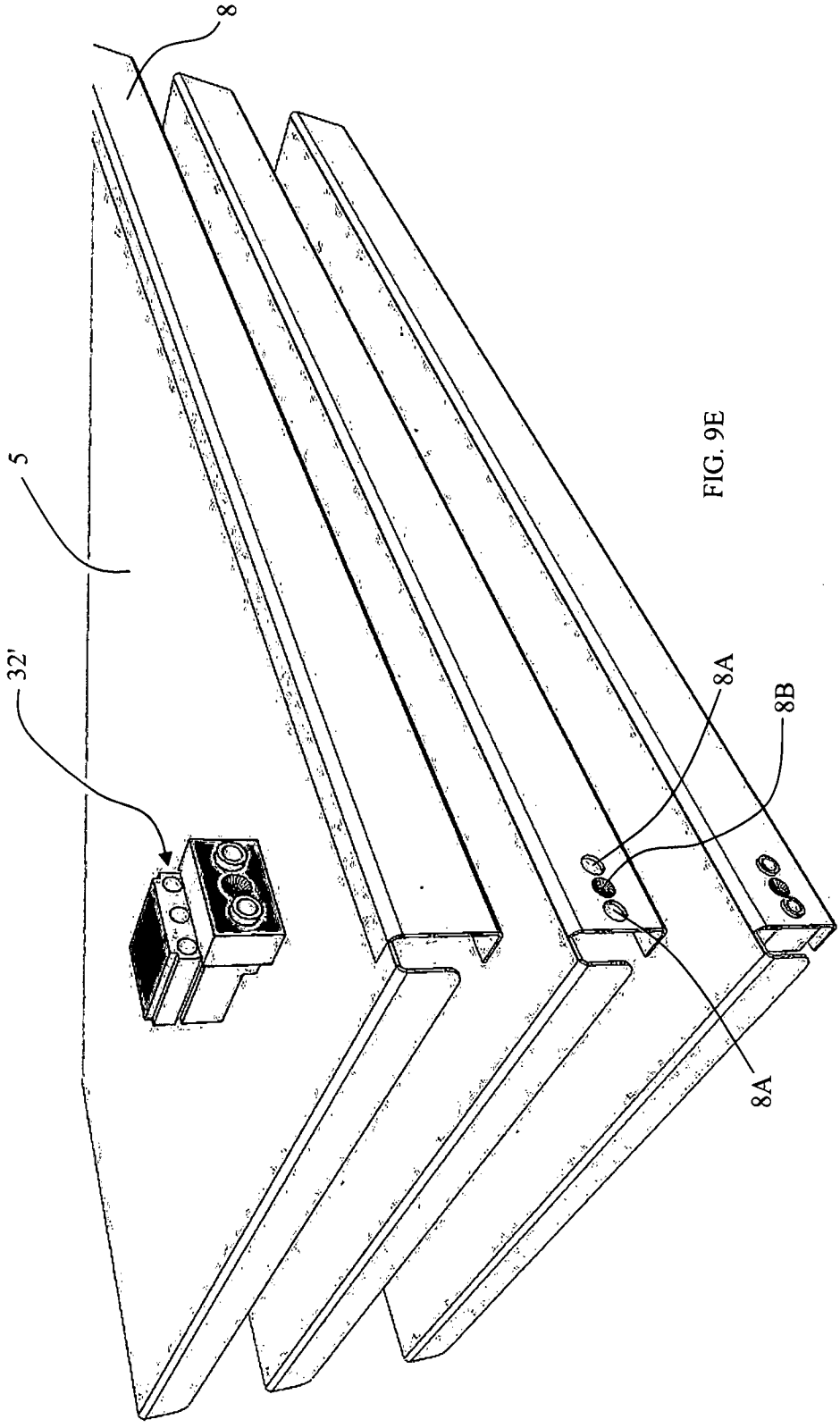

FIG. 9E

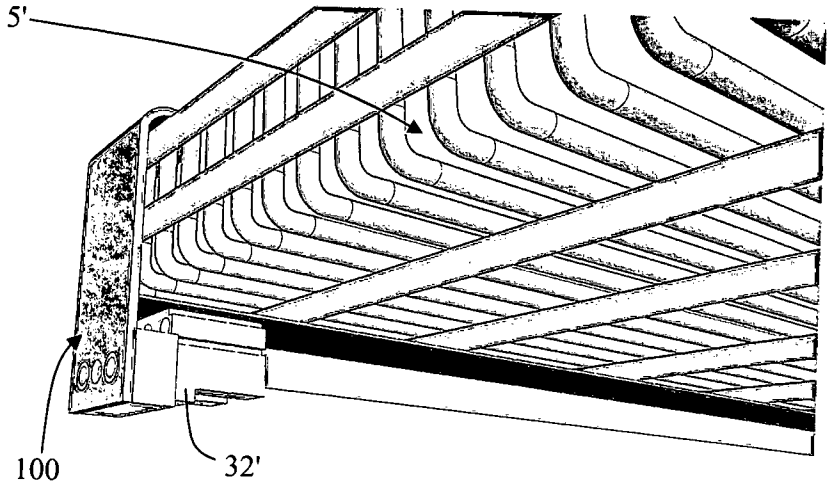

FIG. 10A

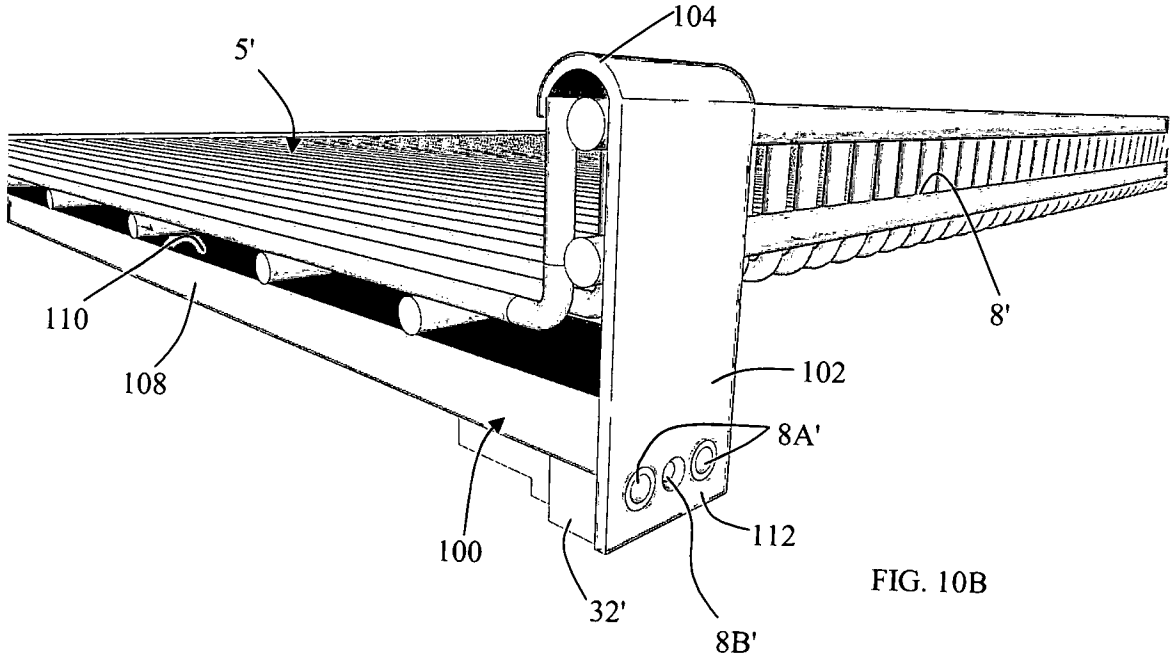

FIG. 10B

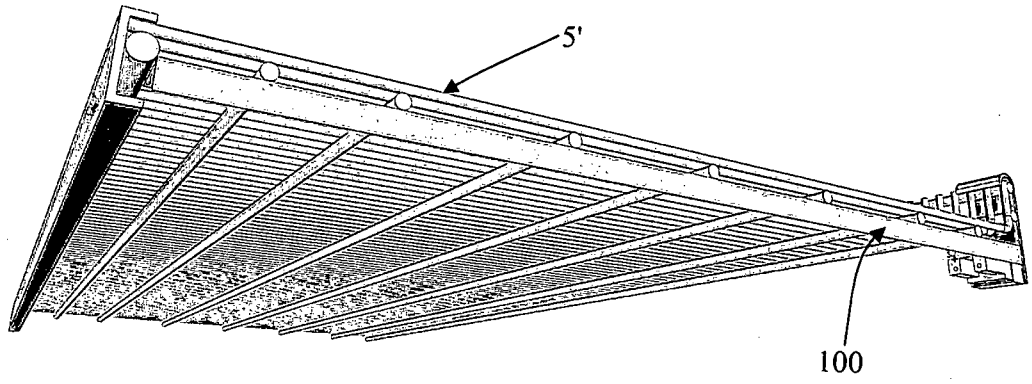

FIG. 10C

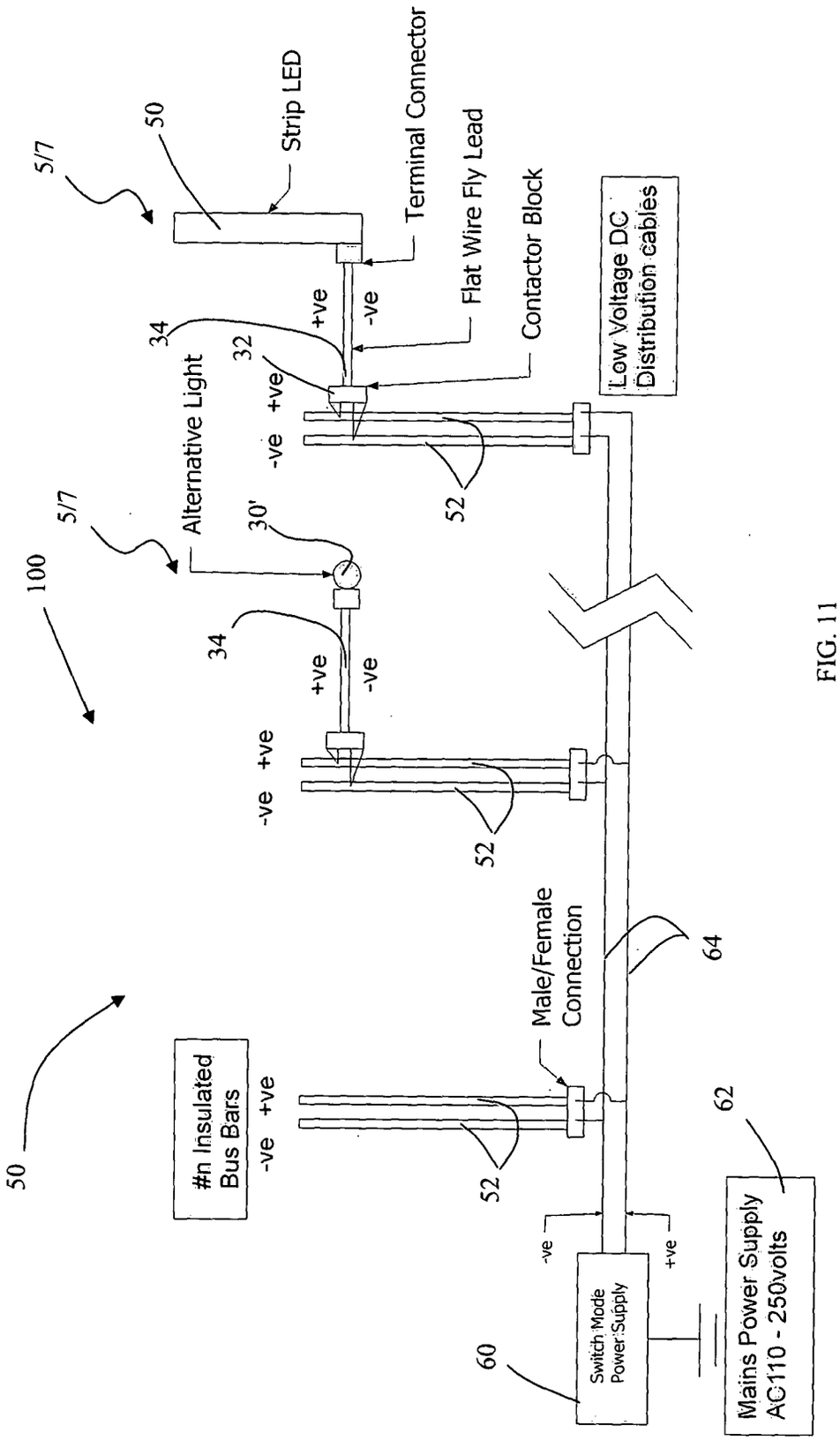
50
#n Insulated Bus Bars
-ve +ve
Male/Female Connection
64
62
Mains Power Supply AC110 - 250volts
60
Switch Mode Power Supply
-ve
+ve
52
100
5/7
Alternative Light
30'
34
+ve
-ve
-ve +ve
5/7
50
Strip LED
Terminal Connector
Flat Wire Fly Lead
Contactor Block
32
Low Voltage DC Distribution cables

FIG. 11

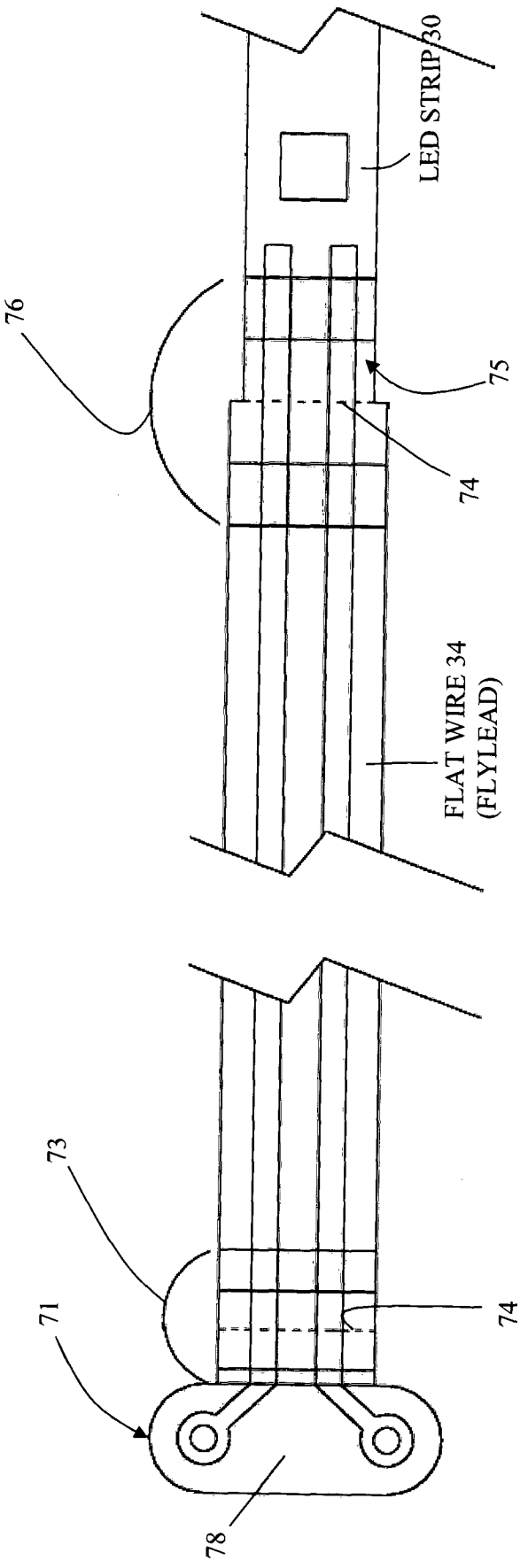

FIG. 12

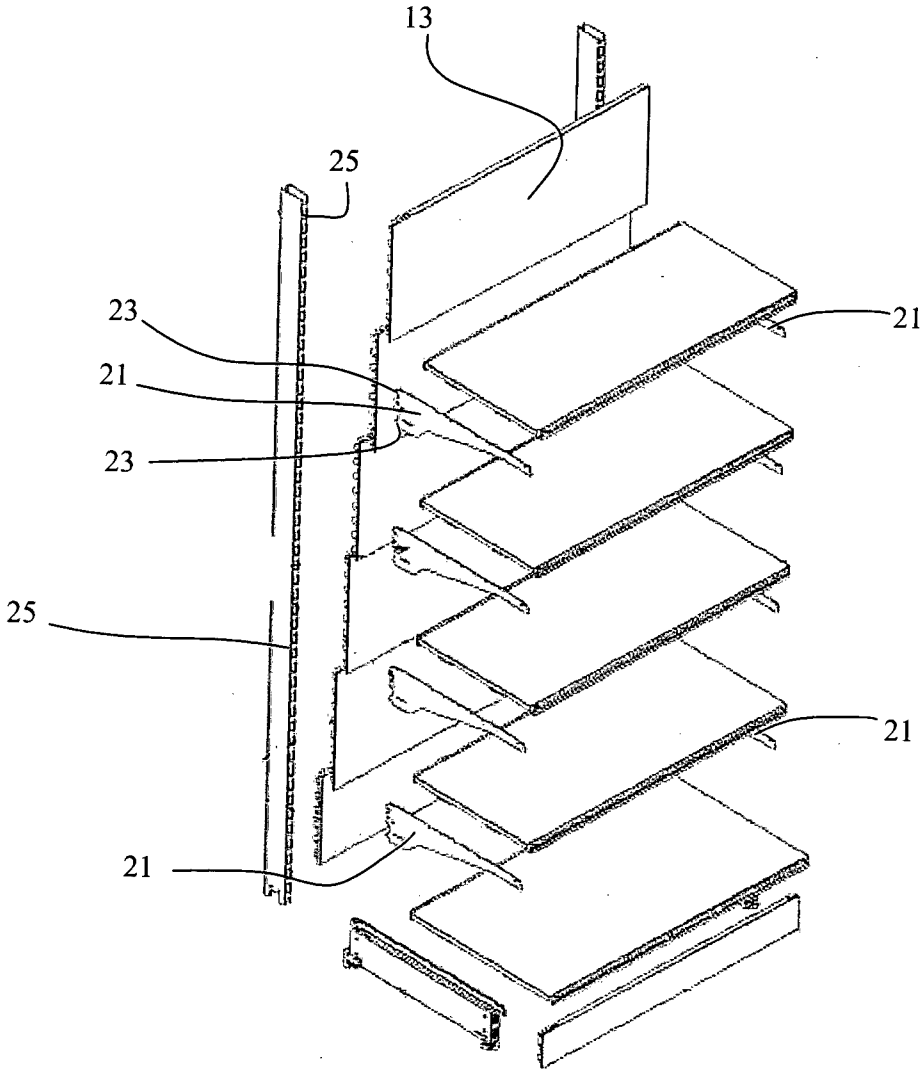

FIG. 13

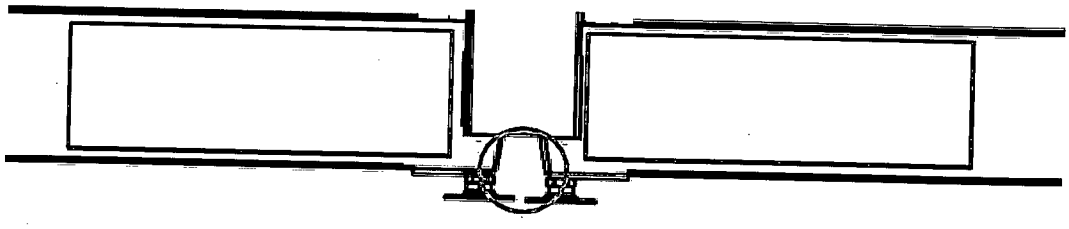

FIG. 14

INTERNATIONAL SEARCH REPORT

International application No.
PCT/AU2013/001111

A. CLASSIFICATION OF SUBJECT MATTER

A47F 11/10 (2006.01) ***A47B 96/00 (2006.01)*** ***A47B 97/00 (2006.01)*** ***H01B 5/02 (2006.01)*** ***H01B 17/18 (2006.01)*** ***H02B 1/20 (2006.01)***

According to International Patent Classification (IPC) or to both national classification and IPC

B. FIELDS SEARCHED

Minimum documentation searched (classification system followed by classification symbols)

Documentation searched other than minimum documentation to the extent that such documents are included in the fields searched

Electronic data base consulted during the international search (name of data base and, where practicable, search terms used)

WPI, EPODOC: IPC, CPC A47B, A47F,H01B5/02, 17/18, H02B1/20, A47B 97, A47B 96/, A47F 3, 5, 7, H01R Keywords (power, electric, battery, motor, light, busbar, shelf, shelv+, display, rack?, stand?, contact+, couple, connect, position, location, height,), (bus+bar, power_strip, slot, groove, channel, enclosure, display, shelve, shelf, rack, structure,), (support, mount, adapt, bracket, electrical, switch, connector, light, illumination, display, audio, adaptor,) , (electrical, connector, power, supply, contact, spring, bias, cabinet, shelf, shelve, light, illumination).

C. DOCUMENTS CONSIDERED TO BE RELEVANT

Category*	Citation of document, with indication, where appropriate, of the relevant passages	Relevant to claim No.
	Documents are listed in the continuation of Box C	

[X] Further documents are listed in the continuation of Box C

[X] See patent family annex

* Special categories of cited documents:

"A" document defining the general state of the art which is not considered to be of particular relevance

"E" earlier application or patent but published on or after the international filing date

"L" document which may throw doubts on priority claim(s) or which is cited to establish the publication date of another citation or other special reason (as specified)

"O" document referring to an oral disclosure, use, exhibition or other means

"P" document published prior to the international filing date but later than the priority date claimed

"T" later document published after the international filing date or priority date and not in conflict with the application but cited to understand the principle or theory underlying the invention

"X" document of particular relevance; the claimed invention cannot be considered novel or cannot be considered to involve an inventive step when the document is taken alone

"Y" document of particular relevance; the claimed invention cannot be considered to involve an inventive step when the document is combined with one or more other such documents, such combination being obvious to a person skilled in the art

"&" document member of the same patent family

Date of the actual completion of the international search	Date of mailing of the international search report
16 December 2013	16 December 2013
Name and mailing address of the ISA/AU	**Authorised officer**
AUSTRALIAN PATENT OFFICE PO BOX 200, WODEN ACT 2606, AUSTRALIA Email address: pct@ipaustralia.gov.au Facsimile No.: +61 2 6283 7999	Ponnam Ponnampalam AUSTRALIAN PATENT OFFICE (ISO 9001 Quality Certified Service) Telephone No. 0262832070

INTERNATIONAL SEARCH REPORT C (Continuation). DOCUMENTS CONSIDERED TO BE RELEVANT		International application No. **PCT/AU2013/001111**
Category*	Citation of document, with indication, where appropriate, of the relevant passages	Relevant to claim No.
X	EP 1688070 B1 (KONIG PROJECT MANAGEMENT GMBH) 21 April 2010 English translation of the document from Esp@ce, Claims 1-25, figs 1-10.	1-30b,52, 53 & 34-37, 43-47
X	US 5690415 A (KREHL) 25 November 1997 Whole document	1-30b, 52, 53
X	KR 1020100137297 A (PARK) 30 December 2010 English translation of the document from KIPO & Figs 1-9	1-30b, 52, 53
X	US 2004/0038567 A1 (POCHLAU) 26 February 2004 Abstract & fig 1	31-33
X	DE 102009006537 A1 (REHAU AG & CO) 29 July 2010 Figs 1-3 & Derwent Abstract Accession No. 2010-J60727	31-33
A	GB 1484192 A (SQUARE D COMPANY) 01 September 1977 fig 3	31-33
X	GB 2255820 A (A M S RETAIL INTERIORS LIMITED) 18 November 1992 Figs 1-9 & abstract	34-37, 43-47
X	US 2008/0043456 A1 (BERNARDINI ET AL) 21 February 2008 fig 1	34
X	US 6042244 A (WITKOSKI) 28 March 2000 Abstract & figs 1-6	48-51
A	EP 2438836 A1 (HALEMEIER GMBH & CO. KG) 11 April 2012	48-51

INTERNATIONAL SEARCH REPORT

International application No.
PCT/AU2013/001111

Box No. II Observations where certain claims were found unsearchable (Continuation of item 2 of first sheet)

This international search report has not been established in respect of certain claims under Article 17(2)(a) for the following reasons:

1. ☐ Claims Nos.:

because they relate to subject matter not required to be searched by this Authority, namely:

the subject matter listed in Rule 39 on which, under Article 17(2)(a)(i), an international search is not required to be carried out, including

2. ☐ Claims Nos.:

because they relate to parts of the international application that do not comply with the prescribed requirements to such an extent that no meaningful international search can be carried out, specifically:

3. ☐ Claims Nos:

because they are dependent claims and are not drafted in accordance with the second and third sentences of Rule 6.4(a)

Box No. III Observations where unity of invention is lacking (Continuation of item 3 of first sheet)

This International Searching Authority found multiple inventions in this international application, as follows:

See Supplemental Box for Details

1. ☒ As all required additional search fees were timely paid by the applicant, this international search report covers all searchable claims.
2. ☐ As all searchable claims could be searched without effort justifying additional fees, this Authority did not invite payment of additional fees.
3. ☐ As only some of the required additional search fees were timely paid by the applicant, this international search report covers only those claims for which fees were paid, specifically claims Nos.:
4. ☐ No required additional search fees were timely paid by the applicant. Consequently, this international search report is restricted to the invention first mentioned in the claims; it is covered by claims Nos.:

Remark on Protest

☐ The additional search fees were accompanied by the applicant's protest and, where applicable, the payment of a protest fee.

☐ The additional search fees were accompanied by the applicant's protest but the applicable protest fee was not paid within the time limit specified in the invitation.

☒ No protest accompanied the payment of additional search fees.

Supplemental Box

Continuation of: **Box III**

This International Application does not comply with the requirements of unity of invention because it does not relate to one invention or to a group of inventions so linked as to form a single general inventive concept.

This Authority has found that there are different inventions based on the following features that separate the claims into distinct groups:

- Claims 1-30, 52 & 53 are directed to display structure. The feature of when that second support is mounted to the first support, each second support contact engages a respective one of the first support contacts, irrespective of the position at which that second support is so mounted, whereby the powered utility is operable by power source is specific to this group of claims.

- Claims 31-33 are directed to bus bar. The feature of an elongate base and parallel elongate electrodes held within slots formed in the base is specific to this group of claims.

- Claims 34-47 are directed to an adapter. The feature of the adapter being configured such that it can be fitted or mounted to the shelf and such that said unit can be fitted or mounted to it is specific to this group of claims.

- Claims 48-51 are directed to an electrical connector unit. The feature of each second support contact being resiliently biased towards a condition in which it can engage a respective said first contct when the housing is mounted to the second support and the second support is mounted to the first support is specific to this group of claims.

PCT Rule 13.2, first sentence, states that unity of invention is only fulfilled when there is a technical relationship among the claimed inventions involving one or more of the same or corresponding special technical features. PCT Rule 13.2, second sentence, defines a special technical feature as a feature which makes a contribution over the prior art.

When there is no special technical feature common to all the claimed inventions there is no unity of invention.

In the above groups of claims, the identified features may have the potential to make a contribution over the prior art but are not common to all the claimed inventions and therefore cannot provide the required technical relationship. Therefore there is no special technical feature common to all the claimed inventions and the requirements for unity of invention are consequently not satisfied *a priori*.

INTERNATIONAL SEARCH REPORT Information on patent family members	International application No. **PCT/AU2013/001111**

This Annex lists known patent family members relating to the patent documents cited in the above-mentioned international search report. The Australian Patent Office is in no way liable for these particulars which are merely given for the purpose of information.

Patent Document/s Cited in Search Report		Patent Family Member/s	
Publication Number	**Publication Date**	**Publication Number**	**Publication Date**
EP 1688070 B1	21 Apr 2010	EP 1688070 A1	09 Aug 2006
		EP 1688070 B1	21 Apr 2010
US 5690415 A	25 Nov 1997	US 5690415 A	25 Nov 1997
KR 1020100137297 A	30 Dec 2010	None	
US 2004/0038567 A1	26 Feb 2004	JP 2004512634 A	22 Apr 2004
		US 2004038567 A1	26 Feb 2004
		US 6790059 B2	14 Sep 2004
		WO 0229939 A1	11 Apr 2002
DE 102009006537 A1	29 Jul 2010	None	
GB 1484192 A	01 Sep 1977	GB 1484192 A	01 Sep 1977
		ZA 7405132 A	24 Sep 1975
GB 2255820 A	18 Nov 1992	GB 2255820 B	04 Jan 1995
US 2008/0043456 A1	21 Feb 2008	None	
US 6042244 A	28 Mar 2000	None	
EP 2438836 A1	11 Apr 2012	EP 2438836 A1	11 Apr 2012
		EP 2438836 B1	07 Aug 2013

End of Annex

Due to data integration issues this family listing may not include 10 digit Australian applications filed since May 2001.