W. LUND & W. B. LLOYD.
STEERING GEAR.
APPLICATION FILED JUNE 18, 1914.

1,177,425. Patented Mar. 28, 1916.

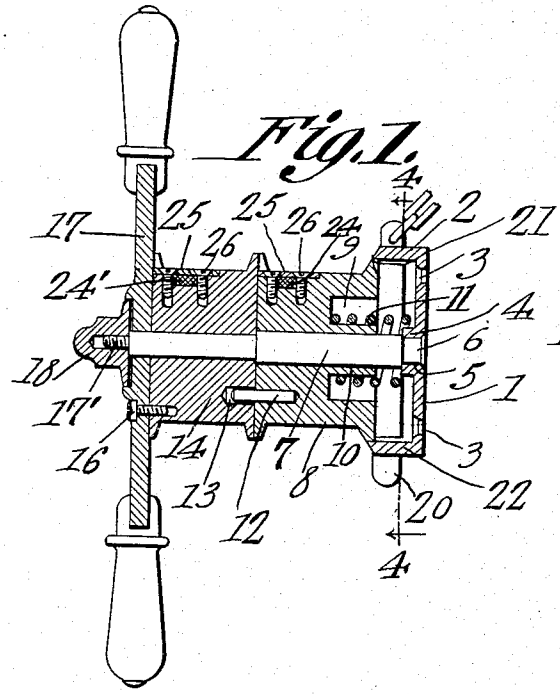

Fig. 1.

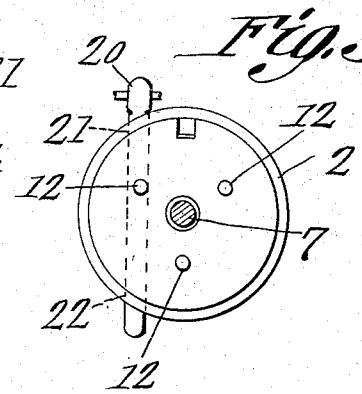

Fig. 3.

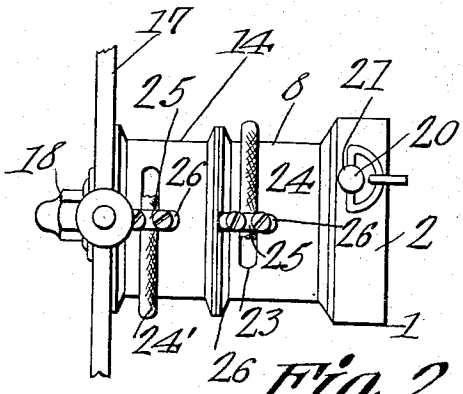

Fig. 2.

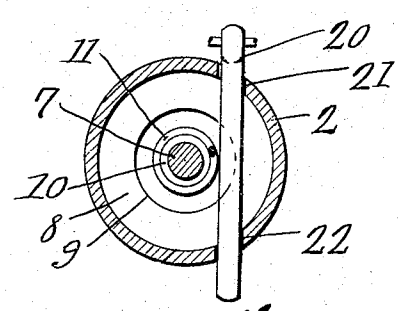

Fig. 4.

W. Lund AND
W. B. Lloyd
Inventors

Witnesses
J. P. Tomlin
S. Willson.

by C. A. Snow & Co.
Attorneys

THE COLUMBIA PLANOGRAPH CO., WASHINGTON, D. C.

UNITED STATES PATENT OFFICE.

WILLIAM LUND, OF CATHLAMET, AND WILLIAM B. LLOYD, OF SKAMOKAWA, WASHINGTON.

STEERING-GEAR.

1,177,425. Specification of Letters Patent. Patented Mar. 28, 1916.

Application filed June 18, 1914. Serial No. 845,989.

To all whom it may concern:

Be it known that we, WILLIAM LUND and WILLIAM B. LLOYD, citizens of the United States, residing, respectively, at Cathlamet and Skamokawa, in the county of Wahkiakum, State of Washington, have invented a new and useful Steering-Gear, of which the following is a specification.

The present invention relates to improvements in steering gears, the same being an improvement upon the steering gear shown in our U. S. Letters Patent No. 1,080,766, dated December 9, 1913, one object of the invention, being the provision of a gear of that type in which the sections of the drum are held together by a spring mounted in one of the sections and adjacent the supporting plate, such inner section being further provided with means for coöperating with a removable pin to lock the sections against longitudinal movement should the spring become weakened or broken.

With the foregoing and other objects in view which will appear as the description proceeds, the invention resides in the combination and arrangement of parts and in the details of construction hereinafter described and claimed, it being understood that changes in the precise embodiment of the invention herein disclosed can be made within the scope of what is claimed without departing from the spirit of the invention.

In the drawings Figure 1 is a longitudinal sectional view through the complete drum and support. Fig. 2 is a top plan view of the drum and support showing a portion of the wheel. Fig. 3 is an end view of the inner section of the drum, the shaft being shown in section. Fig. 4 is a section taken on line 4—4 of Fig. 1.

Referring to the drawings, the numeral 1 designates the supporting member of the present device, which is provided with the annular flange 2, and with the screw opening 3, and with the central sleeve 4 having the flared opening 5 for the reception of the riveted end 6 of the drum carrying spindle 7. This drum carrying spindle is made with two diameters for the respective reception of the drum sections 8 and 14, the section 8 being mounted upon the larger diametered portion for both rotary and longitudinal movements, while the section 14 is mounted for rotatory movement upon the smaller diametered portion and is held against the shoulder between the two diametered portions by the wheel 17 and nut 18.

The drum section 8 is provided with the concentric recess 9 in the end adjacent to the supporting member 1 so as to provide the concentric sleeve 10 about which is disposed the spiral spring 11, such spring bearing against the section 8 to hold it outwardly from the supporting member 1, in combination with the pins 12 and sockets 13 to hold the members 8 and 14 locked together, but yet permit them to be readily disengaged by pushing in upon the member 8 so that the respective sections may be rotated separately or independently as in the before mentioned patent so that the respective terminals 24 and 24′ of the cable may be wound independently to take up the slack in the steering gear.

The steering wheel 17 is properly connected to the inner end of the spindle 7 by means of the threaded stem 17′ and the locking nut 18, a screw 16 being introduced through the wheel and into the outer section 14 of the winding member so that both sections will be rotated with the wheel upon the spindle as is the usual practice.

In order to provide a means for holding the sections of the drums against longitudinal movement when they are properly adjusted, the pin 20 is inserted in the respective alined openings 21 and 22 to the rear of the drum section 8. Thus the pin must be removed before the sections can be separated to adjust the steering rope or cable.

As shown in Figs. 1 and 2, the respective terminals 24—24′ of the steering rope or cable, are disposed to fit within the respective recesses 23 of the members 8 and 14, and be clamped therein by means of the clamping plate 25 and the screws 26. By this means, the end of the cable is properly positioned within the circumference of the respective carrying member and also such end may be readily removed by merely removing the plate 25.

What is claimed is:

A steering gear, including a supporting member having an annular flange, a double diametered spindle carried by said supporting member, a drum section mounted for rotatory and sliding movements upon the larger diametered portion of the spindle and movable within said flange, a second drum section mounted for rotatory movement

upon the smaller diametered portion of the spindle, a wheel mounted for rotation upon the spindle adjacent the free end thereof, said drum sections and wheel having interengageable portions whereby they rotate in unison, retaining means engaged upon the free end of the spindle to hold said drum sections and wheel thereon, a spring between the first mentioned drum section and supporting member for normally holding the two drum sections in engagement with one another, and a removable pin engaged through said flange to prevent the first mentioned drum section from being released from the second mentioned drum section.

In testimony that we claim the foregoing as our own, we have hereto affixed our signatures in the presence of two witnesses.

WILLIAM LUND.
WILLIAM B. LLOYD.

Witnesses:
J. C. McFADDEN,
ENOCH EID.

Copies of this patent may be obtained for five cents each, by addressing the "Commissioner of Patents, Washington, D. C."