June 23, 1959 S. RUBINSTEIN 2,892,049

MAGNETIC SWITCH

Filed April 8, 1957

Fig. 1

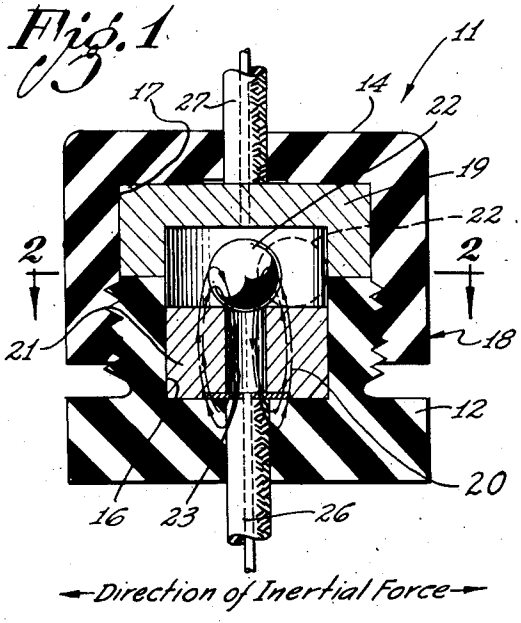

Fig. 2

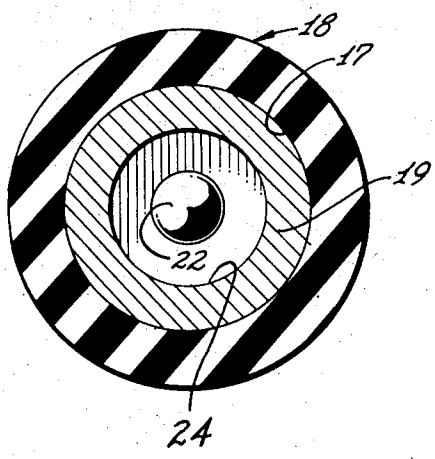

Fig. 3

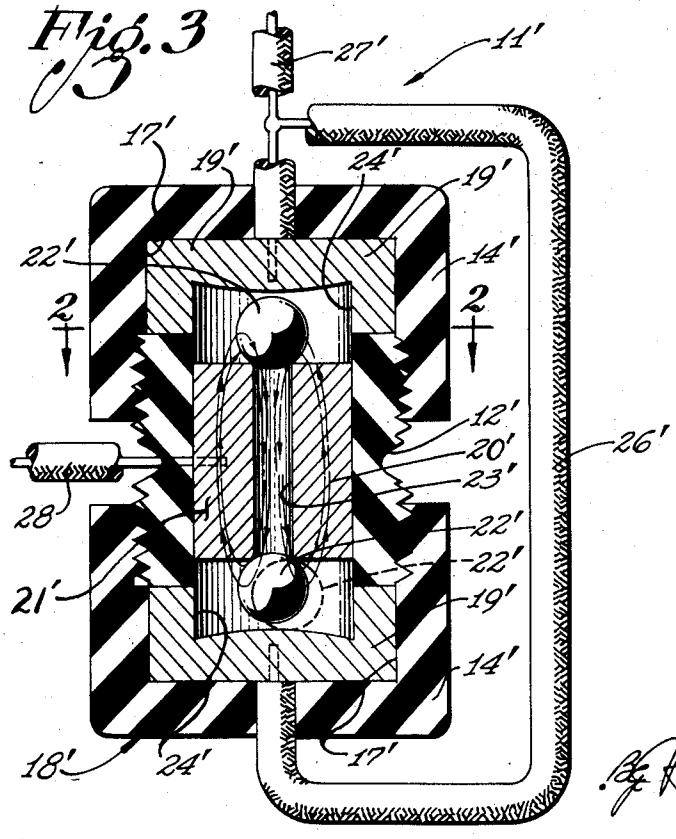

INVENTOR:
Stanley Rubinstein

By Herbert E. Metcalf
His Patent Attorney.

United States Patent Office 2,892,049
Patented June 23, 1959

2,892,049

MAGNETIC SWITCH

Stanley Rubinstein, San Fernando, Calif., assignor, by mesne assignments, to Northrop Corporation, a corporation of California

Application April 8, 1957, Serial No. 651,354

4 Claims. (Cl. 200—61.45)

This invention relates to electrical switching devices and more particularly to an electrical switch responsive to inertial forces.

Numerous and various types of inertial switches have been developed which function to make and break an electrical current flowing therethrough as a result of inertial forces acting on the switch. Switches of the above character are very useful in carrying out the operation for which they are intended. However, to the best of applicant's knowledge, once the above switches have performed an initial switching operation they remain inoperative thereafter until such time as they are manually reset. Construction of this character limits or precludes the use of the above type of inertial switches in many installations especially where a switch is required to function repeatedly without interrupting the operation of apparatus with which it is associated and controlling.

Accordingly it is an object of the present invention to provide an electrical switch which is responsive to predetermined inertial forces and which performs its function repeatedly without manual resetting thereof.

Another object is to provide an electrical switch which initially functions in response to abnormal inertial forces and which incorporates means returning movable parts thereof to their original positions at such times as the abnormal inertial forces no longer act on the switch.

Another object is to provide an electrical switch which is responsive to inertial forces resulting from predetermined changes in either linear or angular accelerations.

Another object is to provide an electrical switch which is responsive to inertial forces which is simple in design and operation yet rugged in construction, which is practically free of malfunctioning characteristics, is economical to manufacture, and which may be easily adapted to any purpose for which it is intended.

Although the characteristic features of the present invention are particularly pointed out in the appended claims, the invention itself, also the manner in which it may be carried out, will be better understood by referring to the following description taken in connection with the accompanying drawings forming a part of this application and in which:

Figures 1 and 3 are longitudinal cross-sectional views of two embodiments of the electrical switch as disclosed herein.

Figure 2 is a cross sectional view of the electrical switches as viewed along either the section lines 2—2 of Figure 1 or Figure 3.

Referring to the drawings and particularly to Figures 1 and 2 in which an inertia switch 11 of the type disclosed herein is shown. The switch as shown in these figures includes threaded male and female housing members 12 and 14 provided with internal cylindrical bores 16 and 17, respectively. These bores terminate in plane surfaces short of the ends of the respective member in which they are formed. With the members 12 and 14 threadably secured together they provide a housing or casing 18

which houses internal components of the switch 11. The components contained within the housing 18 include a member 19, a permanent magnet 21, and a spherical member 22 normally arranged as best seen in Figure 1.

In the present embodiment the members 19 and 21 are of cylindrical-like configuration and as mounted in the housing are in axial alignment and are spaced vertically with respect to each other as viewed in Figure 1. The magnet 21 is further characterized by constituting a right-angled cylinder having a longitudinal bore 23 while the member 19 is of inverted cup-shaped configuration as positioned in the member 14 and defines a cylindrical bore 24.

As mounted in the assembled housing 18 one end of the magnet 21 is bottomed in the bore 16 and has a forced fit relationship therewith so it will retain its relative position therein. The member 19 may also be forced in the bore 24 although the latter member will be held in position by the male member 12. It will be noted that the spherical member 22 is of greater diameter than the diameter of the longitudinal bore 23 and of less diameter than the bore 24. Also the diameter of the member 22 is less than the distance between the terminal end of the bore 24 and the upper end of the magnet 21.

The member 21 is fabricated from a suitable material and is permanently magnetized to provide a magnetic field 20 as represented by broken line construction Figure 1. The members 19 and 22 are fabricated of metal and the latter member is fabricated of a metal which is attracted by the magnetic field of the magnet 21. Under normal conditions the magnetic field 20 causes the member 22 to seat itself on the uppermost periphery of the passage 23 as shown by solid construction in Figure 1. The position of the member 22 described above constitutes the initial or seated position of the member 22 and will be referred to as such hereafter.

The construction of the switch is further characterized in that the member 19 and magnet 21 are mounted in the housing 18 in spaced vertical relation. Also the members 12 and 14 are fabricated of electrical insulating material. Accordingly at such time as the switch is subject to abnormal inertial forces the member 22 will be displaced laterally, that is from its initial position to a position in which it is in contact with the side wall of the bore 24, as shown by dotted construction in Figure 1. This latter position of the member 22 is hereinafter referred to as the final or unseated position of the spherical member. With the member 22 in its final position it will be apparent that an electrical current may flow between the member 19 and magnet 21.

The construction of the switch 11 is completed by electrical connectors 26 and 27 which pass through end portions of members 12 and 14 and are respectively attached to the magnet 21 and member 19.

In operation the switch 11 may be utilized generally as a load sensing device. Specifically it may be utilized to sense centrifugal or centripetal forces, to sense dynamic balance or unbalance of rotating parts, to sense excessive sideslips or skids of an aircraft or the like, to sense maximum allowable accelerations or decelerations of an aircraft or the like, etc.

Assuming the switch 11 is mounted on an aircraft (not shown) to sense maximum allowable accelerations thereof. Further it is assuming that the aircraft is traveling to the left with respect to Figure 1. During normal operations of the aircraft the spherical member 22 is retained in its initial position by the magnetic field 20.

At such times as the airplane exceeds its allowable maximum acceleration, the moment due to the inertial force acting on the member 22 overcomes the moment

provided by the magnetic field **20** of the magnet and the force of gravity.

Accordingly the member **22** is urged from its initial position and is pivoted to the right about the edge of the passage **23**. The spherical member **22** continues to move to the right, maintaining contact with the upper end of the magnet **21**, until it reaches its final position at which time it is in contact with the bore **24** of the cup-shaped member **19**. A path for an electrical current is now provided between the connectors **26** and **27**, the current flowing via the member **19**, spherical member **22**, and magnet **21**. This flow of current may be utilized to energize apparatus (not shown) functioning to reduce the aircraft's acceleration to an acceleration within the prescribed maximum allowable acceleration of the subject aircraft.

At such time as the airplane's acceleration is reduced to or slightly below the aforementioned limits the magnetic field of the magnet **21** overcomes the inertial moment and the spherical member **22** is returned to its initial position, the flow path for the electric circuit is broken, and the apparatus functioning to reduce the aircraft's acceleration is no longer effective. It will be obvious to one skilled in the art that by varying the weight and size of the spherical member **22** its sensitivity to inertial forces can be varied and therefore the switch **11** can be designed so that it will function under any predetermined condition.

The embodiment of the switch as shown in Figure 3 is quite similar to the switch **11** as shown in Figure 1 and is identified in its entirety by the numeral **11'**. Accordingly only those features of the switch **11'** that differ from the construction of switch **11** will be discussed and similar parts will be identified by the same numerals with the addition of a prime.

The switch **11'** is omnidirectional in operation and is rendered so by placing a pair of switches, similar to the switch **11** of Figure 1, in back to back relation and in the construction shown is of integral construction. In this embodiment a pair of spherical members **22'—22'** are located at each end of the magnet **21'** and electrical contact is made between the members **22'** and respective end surfaces of the terminal bores **24'—24'**. In this embodiment the terminal end surfaces of the bores **24'** are shown as convex surfaces with respect to the magnet **21'** when assembled in the housing **18'**. The relationship of the magnet **21'** with respect to the members **19'—19'** is further characterized as follows: The central portions of the end surfaces of the bores **24'**, with respect to the adjacent end surfaces of the magnet **21'**, are spaced apart a distance slightly exceeding the distance the uppermost and lowermost portions of the members **22'—22'** are above and below the adjacent end surface of the magnet **21'** at such times as the members **22'—22'** are in their respective initial positions as shown by solid construction in Figure 2. Further the distance between the respective central portions of the end surfaces of the bores **24'—24'** and the adjacent end surfaces of the magnet **21'** is slightly less than the diameter of the spherical members **22'—22'**. In other words the spherical members **22'—22'** as mounted in the housing **18'** are not able to move an appreciable distance from their respective initial positions but rather they rock or pivot around the edges of the passageway **23'**. In this embodiment it will be seen that electrical contact is made between the spherical members **22'** and the end surfaces of the bores **24'—24'** of the members **19'** at such times as the switch **11'** is activated.

In the switch **11'** a connector **28** is connected to the magnet **21'** while the connectors **26'** and **27'** are joined so that an electrical flow path will be provided at such time as either spherical member **22'** is urged from its initial position to its unseated or final position. In view of the operational discussion in connection with the switch **11** it is believed the operation of the switch **11'** will be clear and further detailed discussion in this respect is not deemed necessary. It will be apparent, however, that the switch **11'** will function to complete an electrical circuit regardless of the direction of an inertial force acting thereon. Should the switch **11'** be accelerated in a true vertical direction as shown in Figure 3, one of the members **22'**, specifically the member which is free to move when acted on by the inertial forces, is urged away from its initial position and will contact the adjacent convex end surface of the bore **24'**. Gravity or inertial forces subsequently acting on the subject spherical member **22'** will cause the latter member to move laterally on the convex surface and into contact with the edge of the passageway **23'** as shown by dotted construction in Figure 3. Accordingly electrical contact will be established between the subject member **19'** and magnet **21'** and an electrical flow path established through the switch **18'**. It will therefore be seen that a true omnidirectional switch is provided in the latter embodiment regardless of the direction of inertial forces acting thereon.

While in order to comply with the statute, the invention has been described in language more or less specific as to structural features, it is to be understood that the invention is not limited to the specific features shown, but that the means and construction herein disclosed comprise a preferred form of several modes of putting the invention into effect, and the invention is therefore claimed in any of its forms or modifications within the legitimate and valid scope of the appended claims.

What is claimed is:

1. In an electrical switch the combination comprising: a housing constructed of a dielectric material; a magnetizable metallic member having a pair of spaced parallel plane surfaces and a cylindrical bore extending between and opening on each of said plane surfaces; said magnetizable member being permanently magnetized so that a pole is located adjacent each end of said cylindrical bore; at least one cup-like metallic member which defines a cylindrical cavity that opens on an outside surface of said cup-like member; said magnetizable and cup-like members being mounted in said housing in spaced relation with said bore and cavity in axial alignment with the open end of said cavity facing said bore to define a receiving chamber therebetween; and a spherical member fabricated of electrical conducting material mounted in said receiving chamber for movement therein between initial and final positions in which an electrical flow path is not provided and is provided, respectively, through said switch in response to changes in either linear or angular accelerations of said switch.

2. In an electrical switch as set forth in claim 1: further characterized in that said magnetizable member is a right-angled cylindrical member and said at least one cup-like member constitutes a single member, the said outside surface of said cup-like member and the adjacent end of said cylindrical member are spaced apart a distance less than the radius of said spherical member, and said bore is less in diameter than the diameter of said spherical member and said cavity is greater in diameter than the diameter of said spherical member.

3. In an electrical switch the combination, comprising: a housing constructed of non-electrical conducting material; a permanently magnetized metallic member having a pair of spaced parallel surfaces; said magnetized member defines a bore which extends completely therethrough in a direction normal to said spaced parallel surfaces; a pair of cup-like metallic members each having a pair of spaced parallel faces and each includes a cylindrical cavity the axis of which is normal to said parallel faces and one end of which terminates in a convex spherical surface and the other end

opens on one of said parallel faces; said permanently magnetized and pair of cup-like members being mounted in said housing; said pair of cup-like members being mounted at respective ends of said permanently magnetized member with the open ends of said cavities facing the latter member and with the axes in said cavities aligned with the axis of said bore to define a pair of receiving chambers; and a pair of spherical members fabricated of electrical conducting material, a respective one of said spherical members mounted in each of said receiving chambers for movement therein between initial and final positions in which an electrical flow path is not provided and is provided, respectively, between said permanently magnetized and non-magnetic members.

4. In an electrical switch as set forth in claim 3: further characterized in that said bore is smaller in diameter than the diameter of said spherical members and the intersection of said bore with said spaced parallel surfaces provide respective seats for said pair of spherical members at such times as the latter members are in their initial positions and the axial distance between the outermost surfaces of said spherical members, when seated in said bore, and an adjacent spherical surface of said cavities is greater than the diameter of said spherical members and the axial distance between each of said parallel surfaces and adjacent spherical surfaces is less than the diameter of said spherical members.

References Cited in the file of this patent

UNITED STATES PATENTS

1,662,979	Nelson	Mar. 20, 1928
2,415,086	Detwiler	Feb. 4, 1947
2,744,976	Black	May 8, 1956
2,791,653	Haberland	May 7, 1957