C. L. FRENCH.

SUCTION FOOT VALVE.

APPLICATION FILED JULY 14, 1913

1,169,792.

Patented Feb. 1, 1916.

FIG. 1

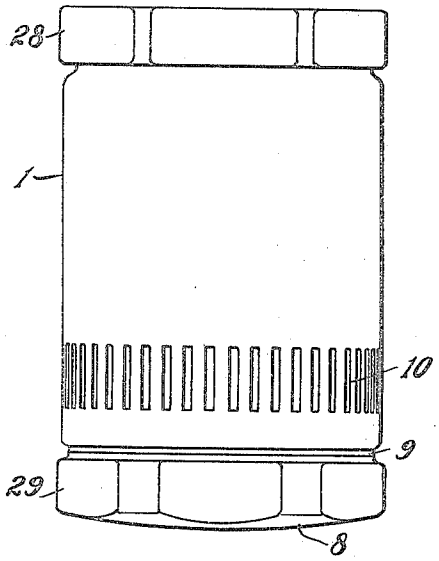

FIG. 3

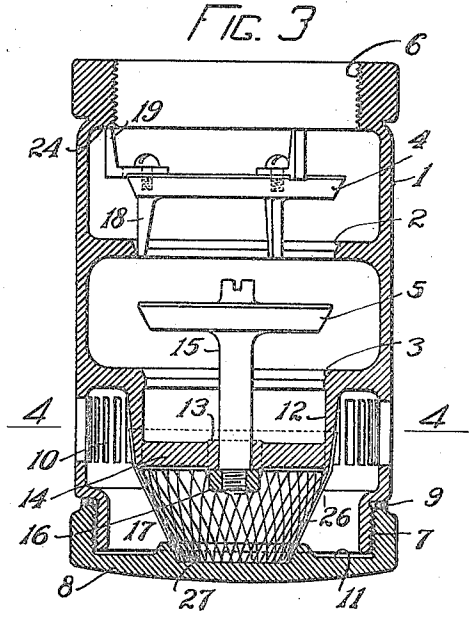

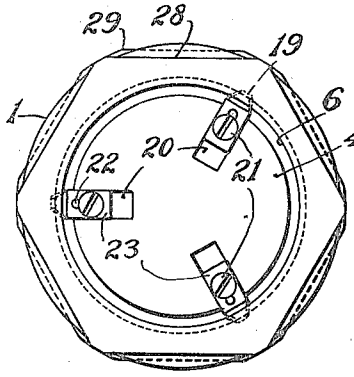

FIG. 2

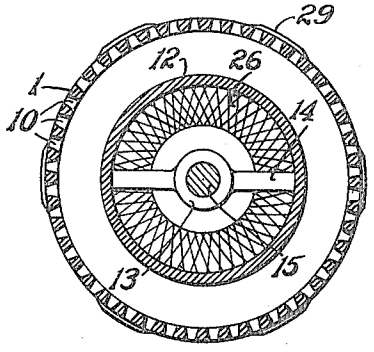

FIG. 4

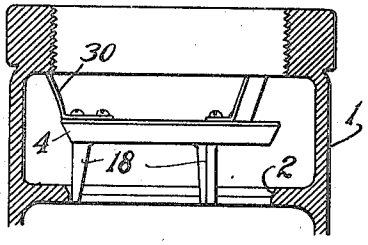

FIG. 5

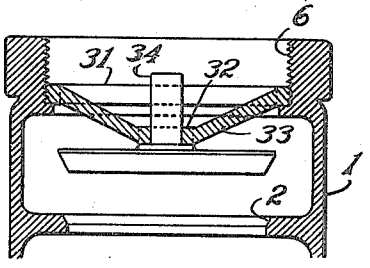

FIG. 6

WITNESSES

A. E. Blaze

N. W. Fernald.

INVENTOR

CHARLES L. FRENCH

BY

A. T. Palmer

ATTY.

UNITED STATES PATENT OFFICE.

CHARLES L. FRENCH, OF CAMBRIDGE, MASSACHUSETTS.

SUCTION FOOT-VALVE.

1,169,792. Specification of Letters Patent. Patented Feb. 1, 1916.

Application filed July 14, 1913. Serial No. 779,043.

To all whom it may concern:

Be it known that I, CHARLES L. FRENCH, of Cambridge, in the county of Middlesex and State of Massachusetts, have invented certain new and useful Improvements in Suction Foot-Valves, of which the following is a specification.

This invention relates to suction foot valves, such as are used at the foot of a suction tube within the bottom of wells or tanks from which liquid is to be drawn through a suitable pump; and has special reference to the pumping of light oils, such as gasolene, from a storage tank situated below and at a distance from the pump, as, for instance, in an automobile garage.

Foot valves of this nature are in every day use and are well-known to the trade, but there are several features and functions connected with their construction which are not incorporated in any type known to me, and which form a very necessary addition, where efficiency of action and simplicity of construction are desired. These storage tanks are generally placed beneath the surface of the ground for better fire protection, and suitable pumps are located on the floor of the garage and connected by suitable lines of piping with the foot valve, which is located within the tank and at the bottom thereof. The pump in general use is designed, not only to lift, but to measure the quantity of gasolene that is to be delivered, and to do this satisfactorily, the pipe connections referred to above, must remain full when the pump is at rest, thus necessitating a foot valve that will automatically permit the upward passage of the gasolene, but will not permit its return to the tank after once passing the valve. As there are likely to be small particles of refuse in the gasolene, such as chips or scale, which, while small enough to successfully pass through the pump, might endanger the successful closing of the foot valve, it is customary to employ two of these check valves in series so that one at least is sure to close and maintain the level of the liquid in the pump. Such refuse as is permitted to pass through the pump is subsequently extracted, together with whatever water may be mechanically mixed with the gasolene, so the only straining means required at the foot valve is that necessary to exclude such refuse as might clog the pump. In addition to the refuse mentioned above, there are likely to be particles of waste or lint which it is highly desirable should not be drawn into the pump and hence it is customary to interpose such straining means as will prevent this from entering the pipe connections. Also, as some water, or possibly some heavier oils may get into the tank, these, settling to the bottom, by gravity, make it highly desirable that some efficient means should be provided whereby the desired oil may be withdrawn to practically empty the tank, without the danger of sucking up the water.

To meet these several requirements, I have invented a foot valve which will not get clogged, either at the screen, nor at the check valves. Also, my valve is so constructed that an appreciable amount of water may accumulate in the tank without the possibility of its being withdrawn with the gasolene, although the valve body may be resting on the floor of the tank.

Other features of construction and use will appear later which add to the value of my invention.

In the drawings, which form part of and accompany this specification,—Figure 1 is a side elevation of my foot valve. Fig. 2 is a top plan view of same. Fig. 3 is a vertical central section. Fig. 4 is a plan section on line 4—4 of Fig. 3. Figs. 5 and 6 are modifications.

The valve-body 1 is in the form of a vertically disposed cylinder with two valve-seats 2 and 3, integral therewith. For the purpose of assembling, the upper valve-seat 2 is slightly larger in area than the lower, 3, and the valves, 4 and 5, respectively, are so mounted above them as to lift or seat automatically, according as to whether the pump is "on" or "off". In Fig. 3, the pump is supposed to be "on" and both valves 4 and 5 are lifted.

The top of body 1 is provided with a screw-connection 6 for assembling on the lower end of a suitable suction pipe, not shown. The bottom of body 1 is provided with a second screw-connection 7 for the purpose of assembling the foot-piece 8 and thereby closing the lower end of body 1. A packing washer 9 may be employed to insure a tight joint at 7, and, as the foot 8 may be entirely submerged in water below the gasolene, this washer 9 helps to prevent corrosion in the screw connection 7.

In the outer wall of body 1, and below valve-seat 3, I provide an inlet for the gasolene in the form of a series of narrow, vertical slots 10, each of which is sufficiently restricted in area to exclude such refuse as might clog the pump. These slots 10 are self-clearing for the smaller particles of refuse, by reason of their larger inner areas, as will be noticed in Fig. 4. Thus, if particles of scale or small chips find their way to these slots, they will, after entering, freely pass through and drop into the pocket 11, in the bottom of foot 8, where they are out of the direct oil current. If they are too large to pass through slots 10, they will find no lodgment on the outside wall of body 1 and must drop to the floor of the tank outside. These slots constitute one of the valuable features of my invention, although they are not indispensable, as will be later noticed.

The bottom of the slots 10 is placed sufficiently above the lower edge of body 1 to allow for an appreciable accumulation of water in the tank which may not be pumped through the regular channel; for it is obvious that action of the pump will cease when the oil is lowered to this level. To insure action until this level has been reached, I preferably surround valve-seat 3 with a depending shell or ring 12 which reaches to or below the bottom of slots 10, and I utilize this ring 12 to support and guide valve 5 in its movements, through the agency of a sleeve 13 united to ring 12 by the arms 14, Figs. 3 and 4. Valve 5 is provided with a depending, central stem 15 adapted to slidably engage with sleeve 13 as a guide, and a nut 16, at the lower end of stem 15, serves to check the upward movement of valve 5; the seat 3 limiting its downward or seating movement.

By the fore-going, it will be seen that with the water in the tank below the bottom of the slots 10, the pump action will raise no water, although the actual suction level is below that of the water, the real pump well being the chamber 17, within the body 1, which, under the above conditions, is always filled with gasolene.

As it is necessary, when assembling valve 4, that no part of its circumference shall be as large as that of the screw-opening 6, and as it is necessary that some arrangement be made to limit its upward movement, and also that some guiding means be employed that will not interfere with the assembling of valve 5, I employ a rim-guide for valve 4, consisting of a series of depending lugs 18 adapted to fit within the opening of seat 2. To limit the upward movement of valve 4, I provide a series of upwardly extending stop-pins 19 adapted for radial movement within slots 20 cut in the upper side of valve 4, the blind screws 21 serving to hold them in extended or retracted position, through the agency of slots 22 in the slide 23 of pins 19. The valve 4 is assembled with the pins retracted, whereafter the slides 23 are moved outwardly until the pins 19 will abut against the shoulder 24, below screw connection 6.

As an auxiliary screening means, I prefer to provide a screen 26, soldered within the cup 27 in foot 8, and adapted to closely surround the lower end of ring 12, so that smaller particles than are excluded by slots 10 may be here caught and deposited within the pocket 11. By inclining this screen 26, the tendency of any particles to cling to its sides is eliminated. This screen 26 could be employed to do the whole work of straining the liquid, in which case the slots 10 could be greatly enlarged; but I prefer to employ both, or to eliminate the screen first. A valuable feature of screen 26 which is not possessed by the slots 10, is the fact that its whole effective area is always submerged, so that any floating refuse has no chance to clog it.

In Fig. 5, the pins 19 are replaced by spring stops 30 adapted to yield sufficiently for assembling.

In Fig. 6, I show a screw collar 31, supporting a central sleeve 32 by means of spokes 33, similar to arms 14. In this arrangement, lugs 18 are not needed, the guiding means being the central stem 34.

By making body 1 in one piece, I avoid a made-up joint between the valves 4 and 5, beside the advantage of simpler and more compact construction.

Wrench-holds 28 and 29 are provided on the body and foot, respectively, for purposes of assembling.

What I claim is:—

1. A foot valve comprising a vertically disposed casing, means for operatively connecting said casing to a suitable suction device, and a lift valve operatively positioned within said casing; in combination with a plurality of movable fingers mounted on said valve and adapted to limit the lifting of said valve, said fingers being collapsibly arranged to permit the placing of said valve in operative position, and means for screening the material to be drawn through said casing.

2. A suction foot valve comprising a vertically disposed casing; means for attaching said casing to a suitable suction device; a plurality of automatic valves mounted in vertical alinement within said casing; and screening means in the side walls of said casing and below said valves; in combination with a series of collapsible fingers mounted in connection with the upper of said valves.

3. A suction foot valve comprising a vertically disposed casing; screening means in the side walls of said casing; and a plurality

of automatic valves mounted in vertical alinement within said casing, the upper of said valves being provided with collapsible fingers to limit its opening movement.

4. A suction foot valve comprising a vertically disposed casing with a series of narrow inlet slots in the side walls thereof and a screw-threaded opening in the top thereof; an automatic lift valve mounted within said casing; a shoulder formed in connection with said screw-threaded opening; and removable means, mounted in connection with said valve and adapted to unite with said shoulder to limit the upward movement of said valve.

5. A suction foot valve comprising a vertically disposed casing; means for operatively connecting said casing to a suitable suction device; and an automatic valve operatively positioned within said casing; in combination with a plurality of collapsible fingers mounted in connection with said valve and adapted to limit the opening movement of same.

In testimony whereof, I have affixed my signature, in presence of two witnesses.

CHARLES L. FRENCH.

Witnesses:

A. T. PALMER,

ARTHUR E. THAYER.