(19) IPOS INTELLECTUAL PROPERTY OFFICE OF SINGAPORE

(11) Publication number: **SG 192526 A1**
(43) Publication date: **30.08.2013**
(51) Int. Cl: ;

(12) Patent Application

(21) Application number: **2013054176**
(22) Date of filing: **12.01.2011**
(30) Priority: **GB 1000964.5 21.01.2010**

(71) Applicant: **VETCO GRAY CONTROLS LIMITED 2 HIGH STREET NAILSEA BRISTOL BS48 1BS UNITED KINGDOM GB**

(72) Inventor: **DAVEY, PETER J. NORTON FARM LOWER NORTON LANE WESTON SUPER MARE, SOMERSET BS22 9YR GREAT BRITAIN GB**
KENT, IAN 33 NIGHTINGALE GARDENS NAILSEA, BRISTOL BS48 2BH GREAT BRITAIN GB

(54) **Title:**
COMMUNICATIONS CONNECTION IN A SUBSEA WELL

(57) **Abstract:**
COMMUNICATIONS CONNECTION IN A SUBSEA WELL ABSTRACT A communication connection in a subsea well for converting an optical signal from an optical fibre (7) to an electrical signal, comprises a small form factor pluggable device (8). Figure 1

This PDF First Page has been artificially created from the Singaporian Abstracts

COMMUNICATIONS CONNECTION IN A SUBSEA WELL

ABSTRACT

A communication connection in a subsea well for converting an optical signal from an optical fibre (7) to an electrical signal, comprises a small form factor pluggable device (8).

Figure 1

COMMUNICATIONS CONNECTION IN A SUBSEA WELL

Field of the Invention

The present invention relates to a communications connection in a subsea well.

Background of the Invention

Subsea wells, such as hydrocarbon extraction wells, are typically supplied with hydraulic and electrical power and communications via an umbilical from a surface platform or surface vessel. Modern wells use optical fibres for communication to the umbilical as they are able to handle the higher bandwidths required. The umbilical is typically terminated in an umbilical termination assembly (UTA) whereby power and communications are distributed to the multiplicity of well trees typical of a subsea well complex, for example either directly or via one or more subsea distribution units. Communication from the UTA can be via fibre optics and/or copper in dependence on a combination of the bandwidth requirements and distances of the individual well trees from the UTA. Termination of the optical fibres from the umbilical is effected by fibre optic connectors, typically as many as at least six being required, with linking of the UTA outputs to the well trees requiring further connectors. The problem is that optical fibre connectors suitable for the high water pressure environment of subsea wells are expensive and typically do not have the confidence of well operators as much as well established electrical connectors. This invention removes the need for fibre optic connectors.

Summary of the Invention

According to the present invention from one aspect, there is provided a communication connection in a subsea well for converting an optical signal from an optic fibre to an electrical signal, comprising a small form factor pluggable device.

According to the present invention from another aspect there is provided a method of providing a communication connection in a subsea well for converting an optical signal from an optical fibre to an electrical signal, comprising using a small form factor pluggable device to convert the optical signal to an electrical signal.

The connection could be between said optical fibre and a subsea electronics module at a well tree or at an underwater termination assembly or at a subsea distribution unit for example.

Said fibre is typically in an umbilical.

There could be a further small form factor pluggable device coupled with the first small form factor pluggable device for converting said electrical signal to an optical signal.

The or each small form factor pluggable device could be received in an electrical connector. In this case, the connector could comprise first and second mated parts, each having a respective shell portion, the or each small form factor pluggable device being received in a respective one of the shells.

Where the connection is between said optical fibre and a subsea electronics module, power for the or each small form factor pluggable device could be provided from the subsea electronics module.

Alternatively, power for the or each small form factor pluggable device could be provided by electrical power supplied from a surface facility or by optical energy from a further optical fibre or by a rechargeable battery.

Brief Description of the Drawings

Fig. 1 shows diagrammatically the termination of an umbilical at a UTA, together with a well tree coupled with the UTA;

Figs. 2a-2c show a first set of embodiments of the invention; and

Figs. 3a-3c show a second set of embodiments of the invention.

Detailed Description of Embodiments of the Invention

Fig. 1 shows a typical arrangement of the termination of an umbilical 1 from a surface facility such as a surface platform or surface vessel at UTA 2, the output 3 of which feeds hydraulic power to a subsea control module (SCM) 4 mounted on a well tree 5 and feeds electrical power and communication to a subsea electronic module (SEM) 6 housed in the SCM 4. The UTA 2 also feeds hydraulic and electrical power and communications to other trees in a well complex.

In Figs. 2a-2c and 3a-3c, reference numeral 7 denotes an optical fibre in an umbilical from a UTA, reference numeral 8 designates a small form factor pluggable device (SFP) at which the fibre 7 terminates and reference numerals 10 and 11 designate two mated together parts of a copper

connector having end shells 12 and 16 respectively, the SFP 8 being mounted in and moulded into the end shell 12 of the connector part 10.

Fig. 2a shows an arrangement according to the invention where the required communication interface to the SEM is copper, such as 4-wire Ethernet, reference numeral 17 designating a line carrying AC power from the umbilical from the surface facility. SFPs suitable for the invention are available off the shelf. Electric power is required for the SFP 8, typically at 3.3 volts. This can be provided from the DC power supplies already available in the SEM via a line 18. Alternatively, since the power requirements of the SFP 8 are small, an alternative power source, as shown in Fig. 2b, is practical in which a small AC to DC power supply unit 13, such as a switching or capacitor fed power supply, deriving power from the AC power on line 17 is also mounted in the end shell 12. This arrangement saves two connections through the connector 10/11, which can result in significant cost reduction. A further alternative way of providing electric power to the SFP 8 (particularly if there are spare optical fibres in the umbilical from the UTA and as illustrated in Fig. 2c) is to transmit light down a fibre 19 and utilise a photovoltaic cell to convert the light to electrical power to supply the SFP, i.e. a photovoltaic power supply unit 14, which can also be moulded in the end shell 12 of the connector 10/11. The light typically would be provided via the umbilical from the surface facility to the UTA.

Figs. 3a-3c show modifications of the embodiments of Figs. 2a-2c respectively where the required communication interface to the SEM is optical fibre. In Fig. 3a, an SFP 15 is also mounted in and moulded in the end shell 16 of connector part 11 of the mated copper connector 10/11. The SFP 8 converts the fibre optic output to an electrical interface, such as 4-wire Ethernet, which feeds through the copper connector 10/11 to the SFP 15 which converts the electrical interface back to a fibre optic one. Thus, an electrical connector can be used to achieve the interface instead of a much more expensive optical fibre connector. The short length of copper in the connector 10/11 allows data rates of up to 100 Mbits/second, which is

adequate for most subsea well applications and typically matches the fibre optic achievable bandwidth. Electrical power for the SFPs 8 and 15 is provided (as in Fig. 2a) from existing power supplies in the SEM. Fig. 3b shows an arrangement in which electric power is supplied to the SFPs 8 and 15 by a small power supply unit as in Fig. 2b and Fig. 3c shows the power supply derived from a photovoltaic cell 14 energised by light via a spare optical fibre as in Fig. 2c.

The present invention may be applied not just to an optical fibre connection at a well tree, but also to an optical fibre connection at a UTA (e.g. from an umbilical from a surface facility or out of the UTA) and/or into or out of a subsea distribution unit. Also, the invention is not restricted to the use of 4-wire Ethernet - it may be applied, for example, to any form of serial communications. A further alternative to the forms of power supply for the or each SFP is to use a rechargeable battery, for example a battery rechargeable using light from an optical fibre.

Advantages of Using the Invention

1/ Expensive fibre optic connectors are eliminated and replaced by much cheaper electrical connectors.

2/ Many modern wells and their SEMs employ Ethernet interfaces. This invention provides a neat and low cost direct conversion from the fibre optic output of the umbilical to the Ethernet communication system.

CLAIMS

1. A communication connection in a subsea well for converting an optical signal from an optical fibre to an electrical signal, comprising a small form factor pluggable device.

2. A connection according to claim 1, wherein the connection is between said optical fibre and a subsea electronics module at a well tree or is at an underwater termination assembly or is at a subsea distribution unit.

3. A connection according to claim 1 or 2, wherein said fibre is in an umbilical.

4. A connection according to any preceding claim, including a further small form factor pluggable device coupled with the first small form factor pluggable device for converting said electrical signal to an optical signal.

5. A connection according to any preceding claim, wherein the or each small form factor pluggable device is received in an electrical connector.

6. A connection according to claim 5, wherein the connector comprises first and second mated parts, each having a respective shell portion, the or each small form factor pluggable device being received in a respective one of the shells.

7. A connection according to claim 2 or any of claims 3 to 6 as dependent on claim 2, wherein said connection is between said fibre and a subsea electronics module and power for the or each small form factor pluggable device is provided from the subsea electronics module.

8. A communication connection according to any of claims 1 to 6, wherein power for the or each small form factor pluggable device is provided

by electrical power supplied from a surface facility or is provided by optical energy from a further optical fibre or is provided by a rechargeable battery.

9. A method of providing a communication connection in a subsea well for converting an optical signal from an optical fibre to an electrical signal, comprising using a small form factor pluggable device to convert the optical signal to an electrical signal.

10. A method according to claim 9, wherein the connection is between said optical fibre and a subsea electronics module at a well tree or is at an underwater termination assembly or is at a subsea distribution unit.

11. A method according to claim 9 or 10, wherein said fibre is in an umbilical.

12. A method according to any of claims 9 to 11, comprising providing a further small form factor pluggable device coupled with the first small form factor pluggable device to convert said electrical signal to an optical signal.

13. A method according to any of claims 9 to 12, wherein the or each small form factor pluggable device is received in an electrical connector.

14. A method according to claim 13, wherein the connector comprises first and second mated parts, each having a respective shell portion, the or each small form factor pluggable device being received in a respective one of the shells.

15. A method according to claim 10 or any of claims 11 to 13 as dependent on claim 10, wherein said connection is between said fibre and a subsea electronics module and power for the or each small form factor pluggable device is provided from the subsea electronics module.

16. A method according to any of claims 9 to 14, wherein power for the or each small form factor pluggable device is provided by electrical power supplied from a surface facility or is provided by optical energy from a further optical fibre or is provided by a rechargeable battery.

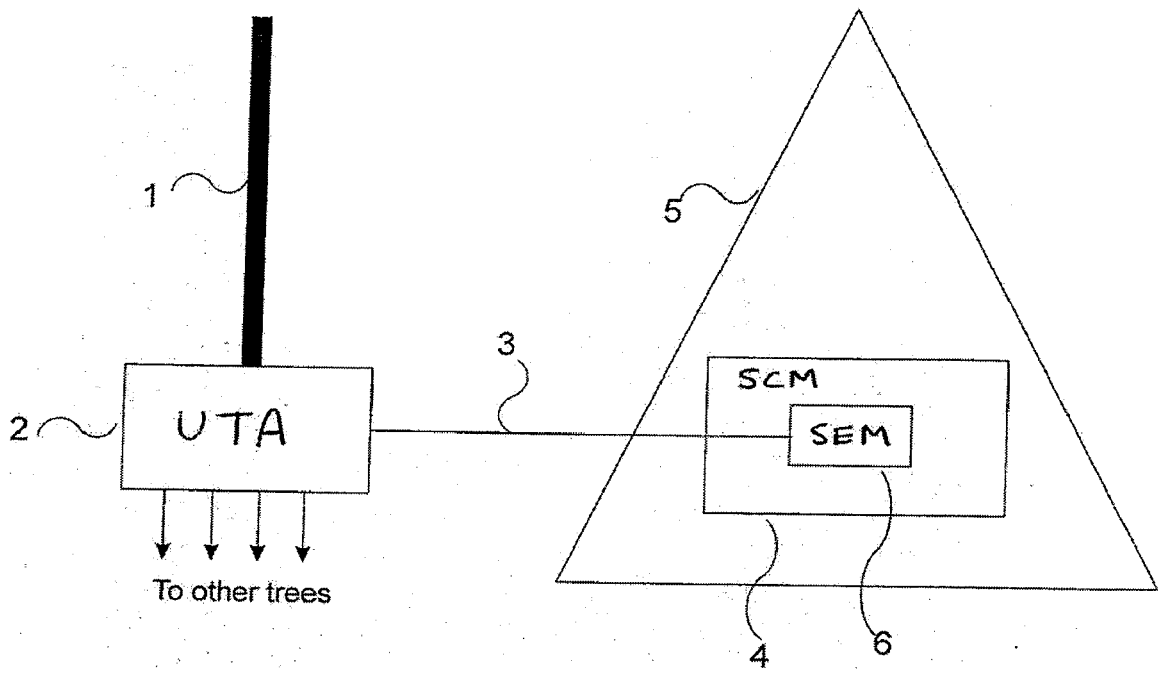

Fig. 1

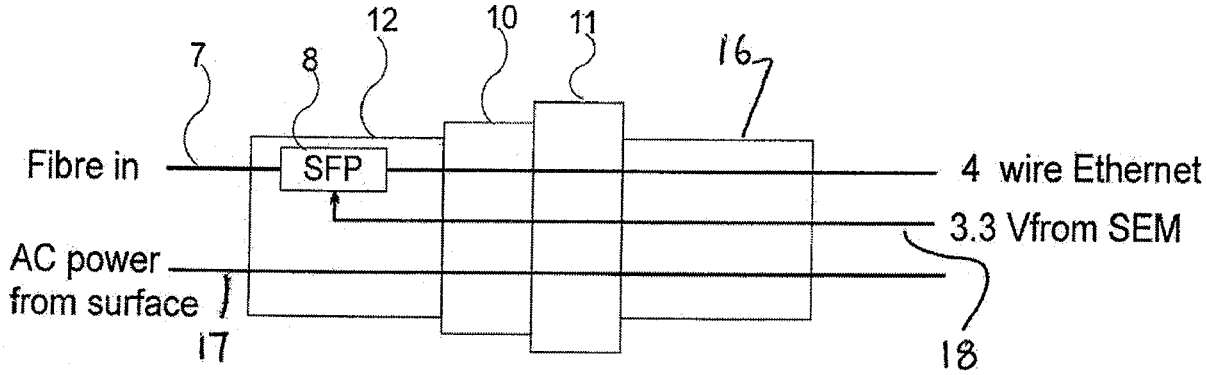

Fig.2a

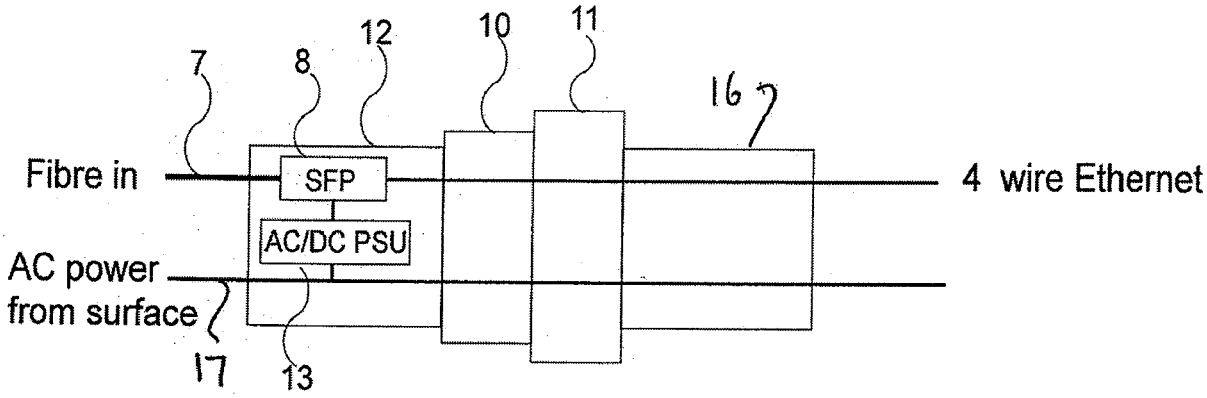

Fig.2b

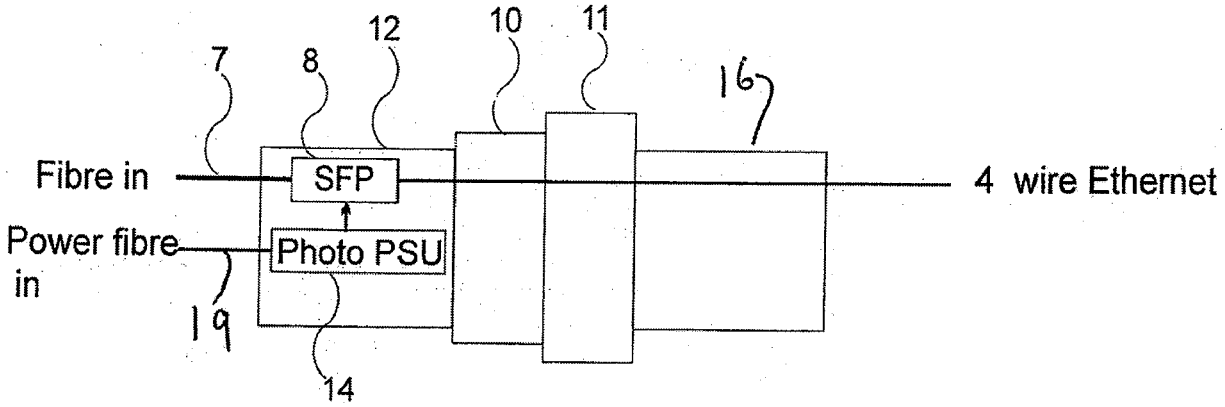

Fig.2c

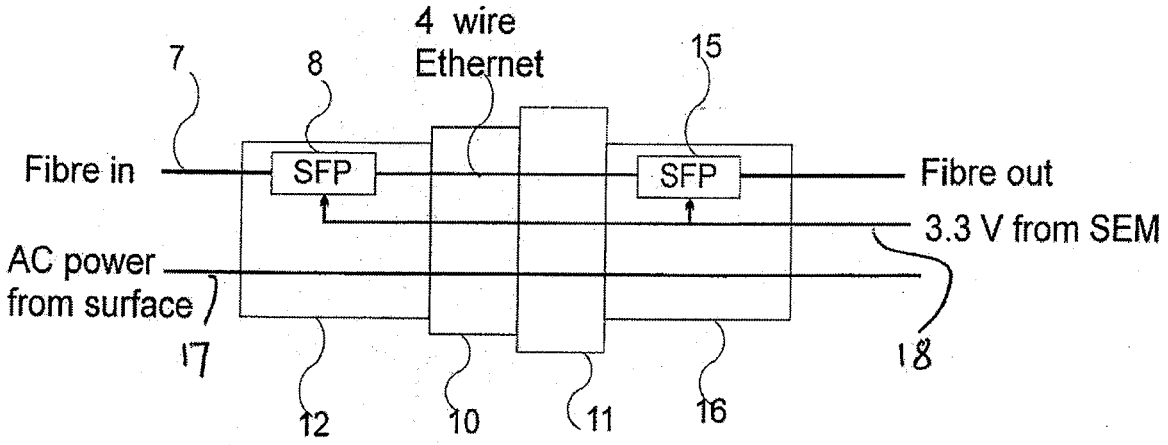

Fig.3a

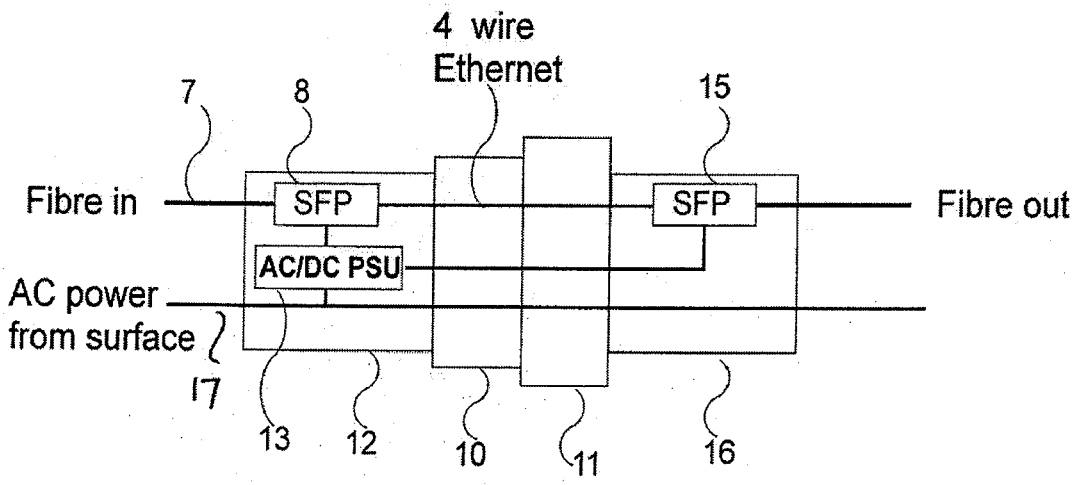

Fig.3b

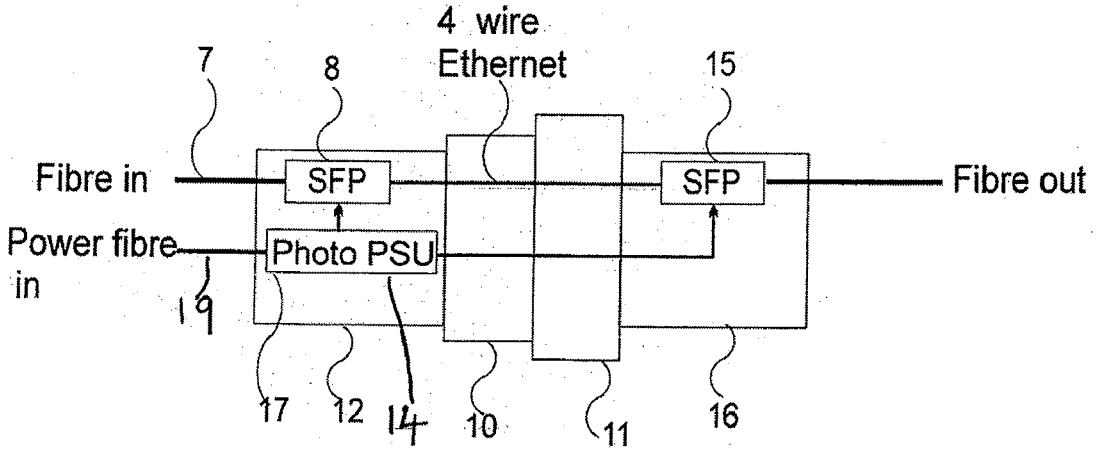

Fig.3c