(12) INTERNATIONAL APPLICATION PUBLISHED UNDER THE PATENT COOPERATION TREATY (PCT)

(19) World Intellectual Property Organization
International Bureau

(43) International Publication Date
04 July 2019 (04.07.2019)

WIPO | PCT

(10) International Publication Number
WO 2019/133114 A1

(51) International Patent Classification:
B33Y 10/00 (2015.01) *B33Y 50/00* (2015.01)
B33Y 30/00 (2015.01)

(21) International Application Number:
PCT/US2018/059760

(22) International Filing Date:
08 November 2018 (08.11.2018)

(25) Filing Language: English

(26) Publication Language: English

(30) Priority Data:
62/611,922 29 December 2017 (29.12.2017) US
16/181,633 06 November 2018 (06.11.2018) US

(71) Applicant: **CC3D LLC** [US/US]; 215 East Lakeside Ave., Coeur d'Alene, Idaho 83814 (US).

(72) Inventor: **BUDGE, Trevor David**; 1028 E. Boyd Ave., Coeur d'Alene, Idaho 83814 (US).

(74) Agent: **STOCKETT, Ryan C.**; 215 EAST LAKESIDE AVE., COEUR D'ALENE, Idaho 83814 (US).

(81) Designated States *(unless otherwise indicated, for every kind of national protection available)*: AE, AG, AL, AM, AO, AT, AU, AZ, BA, BB, BG, BH, BN, BR, BW, BY, BZ, CA, CH, CL, CN, CO, CR, CU, CZ, DE, DJ, DK, DM, DO, DZ, EC, EE, EG, ES, FI, GB, GD, GE, GH, GM, GT, HN, HR, HU, ID, IL, IN, IR, IS, JO, JP, KE, KG, KH, KN, KP, KR, KW, KZ, LA, LC, LK, LR, LS, LU, LY, MA, MD, ME, MG, MK, MN, MW, MX, MY, MZ, NA, NG, NI, NO, NZ, OM, PA, PE, PG, PH, PL, PT, QA, RO, RS, RU, RW, SA, SC, SD, SE, SG, SK, SL, SM, ST, SV, SY, TH, TJ, TM, TN, TR, TT, TZ, UA, UG, US, UZ, VC, VN, ZA, ZM, ZW.

(84) Designated States *(unless otherwise indicated, for every kind of regional protection available)*: ARIPO (BW, GH, GM, KE, LR, LS, MW, MZ, NA, RW, SD, SL, ST, SZ, TZ, UG, ZM, ZW), Eurasian (AM, AZ, BY, KG, KZ, RU, TJ, TM), European (AL, AT, BE, BG, CH, CY, CZ, DE, DK, EE, ES, FI, FR, GB, GR, HR, HU, IE, IS, IT, LT, LU, LV, MC, MK, MT, NL, NO, PL, PT, RO, RS, SE, SI, SK, SM, TR), OAPI (BF, BJ, CF, CG, CI, CM, GA, GN, GQ, GW, KM, ML, MR, NE, SN, TD, TG).

Declarations under Rule 4.17:
— *as to applicant's entitlement to apply for and be granted a patent (Rule 4.17(ii))*

Published:
— *with international search report (Art. 21(3))*

(54) Title: SYSTEM AND PRINT HEAD FOR CONTINUOUSLY MANUFACTURING COMPOSITE STRUCTURE

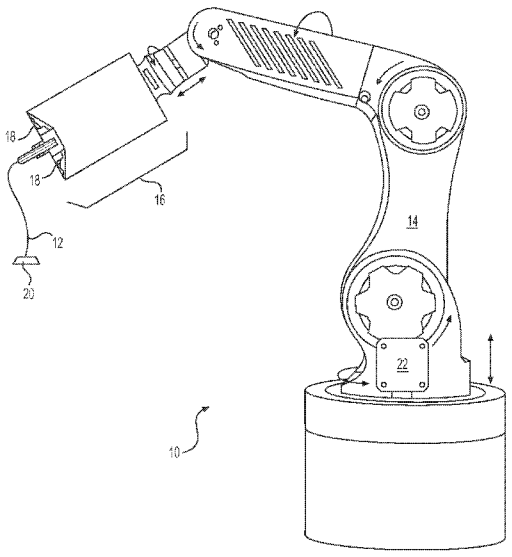

FIG. 1

(57) Abstract: A system is disclosed for use in additively manufacturing a composite structure. The system may include a head configured to discharge a continuous reinforcement at least partially coated with a matrix. The head may have a matrix reservoir, and a nozzle connected to an end of the matrix reservoir. The system may further include a support configured to move the head during discharging, and a supply of matrix. The system may also include at least one sensor configured to generate a signal indicative of a matrix characteristic inside of the head, and a controller configured to selectively affect the supply of matrix based on the signal.

WO 2019/133114 A1

Description

SYSTEM AND PRINT HEAD FOR CONTINUOUSLY MANUFACTURING COMPOSITE STRUCTURE

Related Applications

[0001] This application is based on and claims the benefit of priority from United States Provisional Application No. 62/611,922 that was filed on December 29, 2017, the contents of which are expressly incorporated herein by reference.

Technical Field

[0002] The present disclosure relates generally to a manufacturing system and print head, and more particularly, to a system and print head for continuously manufacturing composite structures.

Background

[0003] Extrusion manufacturing is a known process for producing continuous structures. During extrusion manufacturing, a liquid matrix (e.g., a thermoset resin or a heated thermoplastic) is pushed through a die having a desired cross-sectional shape and size. The material, upon exiting the die, cures and hardens into a final form. In some applications, UV light and/or ultrasonic vibrations are used to speed the cure of the liquid matrix as it exits the die. The structures produced by the extrusion manufacturing process may have any continuous length, with a straight or curved profile, a consistent cross-sectional shape, and smooth surface finishes. Although extrusion manufacturing can be an efficient way to continuously manufacture structures, the resulting structures may lack the strength required for some applications.

[0004] Pultrusion manufacturing is a known process for producing high-strength structures. During pultrusion manufacturing, individual fiber strands, braids of strands, and/or woven fabrics are coated with or otherwise impregnated with a liquid matrix (e.g., a thermoset resin or a heated thermoplastic) and pulled through a stationary die where the liquid matrix cures and hardens into a final form. As with extrusion manufacturing, UV light and/or ultrasonic vibrations are used in some pultrusion applications to speed the cure of the liquid matrix as it exits the die. The

structures produced by the pultrusion manufacturing process have many of the same attributes of extruded structures, as well as increased strength due to the integrated fibers. Although pultrusion manufacturing can be used to continuously manufacture high-strength structures, the resulting structures may lack the form (shape, size, precision, and/or surface texture) required for some applications. In addition, conventional pultrusion manufacturing may lack precise control over curing and the ability to dynamically change materials in the composite material during manufacture. Further, the variety of patterns and shapes integrated within the pultruded structures may be limited, thereby limiting available characteristics of the resulting structures.

[0005] Continuous fiber 3D printing (a.k.a., CF3D™) has recently been developed to address the shortcomings of extrusion and pultrusion manufacturing. CF3D involves the use of continuous fibers embedded within a matrix discharging from a moveable print head. The matrix can be a traditional thermoplastic, a powdered metal, a liquid resin (e.g., a UV curable and/or two-part resin), or a combination of any of these and other known matrixes. Upon exiting the print head, a head-mounted cure enhancer (e.g., a UV light, an ultrasonic emitter, a heat source, a catalyst supply, etc.) is activated to initiate and/or complete curing of the matrix. This curing occurs almost immediately, allowing for unsupported structures to be fabricated in free space. When fibers, particularly continuous fibers, are embedded within the structure, a strength of the structure may be multiplied beyond the matrix-dependent strength. An example of this technology is disclosed in U.S. Patent 9,511,543, which issued to TYLER on December 6, 2016.

[0006] Although CF3D™ provides for increased strength, compared to manufacturing processes that do not utilize continuous fiber reinforcement, improvements can be made to the structure and/or operation of existing systems. The disclosed additive manufacturing system and print head are uniquely configured to provide these improvements and/or to address other issues of the prior art.

[0007] The disclosed system is directed to addressing one or more of the problems set forth above and/or other problems of the prior art.

Summary

[0008] In one aspect, the present disclosure is directed to a head for an additive manufacturing system. This head may include a matrix reservoir configured to hold a supply of matrix, and a

nozzle connected to an end of the matrix reservoir. The head may also include a plurality of sensors located at an end of the matrix reservoir opposite the nozzle.

[0009] In another aspect, the present disclosure is directed to a head for an additive manufacturing system. This head may include a matrix reservoir configured to hold a supply of matrix, and a nozzle connected to an end of the matrix reservoir. The head may also include a saturation sensor configured to generate a signal indicative of an amount of matrix saturated within a reinforcement passing through the nozzle.

[0010] In yet another aspect, the present disclosure is directed to a head for an additive manufacturing system. This head may include a matrix reservoir configured to hold a supply of matrix, and a nozzle connected to an end of the matrix reservoir. The head may also include a first matrix sensor located at the first end of the matrix reservoir, and a second matrix sensor located at the second end of the matrix reservoir.

[0011] In still another aspect, the present disclosure is directed to a system for additively manufacturing a composite structure. The system may include a head configured to discharge a continuous reinforcement at least partially coated with a matrix. The head may have a matrix reservoir, and a nozzle connected to an end of the matrix reservoir. The system may further include a support configured to move the head during discharging, and a supply of matrix. The system may also include at least one sensor configured to generate a signal indicative of a matrix characteristic inside of the head, and a controller configured to selectively affect the supply of matrix based on the signal.

Brief Description of the Drawings

[0012] Fig. 1 is a diagrammatic illustration of an exemplary disclosed additive manufacturing system; and

[0013] Figs. 2 and 3 are cross-sectional side- and end-view illustrations, respectively of an exemplary disclosed print head that may be used in conjunction with the system of Fig. 1.

Detailed Description

[0014] Fig. 1 illustrates an exemplary system 10, which may be used to continuously manufacture composite structures 12 having any desired cross-sectional shape (e.g., circular, rectangular, or polygonal). System 10 may include at least a support 14 and a head 16. Head 16

may be coupled to and moved by support 14. In the disclosed embodiment of Fig. 1, support 14 is a robotic arm capable of moving head 16 in multiple directions during fabrication of structure 12, such that a resulting longitudinal axis (e.g., a trajectory) of structure 12 is three-dimensional. Support 14 may alternatively embody an overhead gantry or a hybrid gantry/arm also capable of moving head 16 in multiple directions during fabrication of structure 12. Although support 14 is shown as being capable of 6-axis movements, it is contemplated that any other type of support 14 capable of moving head 16 in the same or a different manner could also be utilized. In some embodiments, a drive may mechanically couple head 16 to support 14, and include components that cooperate to move portions of and/or supply power to head 16.

[0015] Head 16 may be configured to receive or otherwise contain a matrix material. The matrix material may include any type of matrix material (e.g., a liquid resin, such as a zero-volatile organic compound resin, a powdered metal, etc.) that is curable. Exemplary resins include thermosets, single- or multi-part epoxy resins, polyester resins, cationic epoxies, acrylated epoxies, urethanes, esters, thermoplastics, photopolymers, polyepoxides, thiols, alkenes, thiol-enes, and more. In one embodiment, the matrix material inside head 16 may be pressurized, for example by an external device (e.g., by an extruder or another type of pump - not shown) that is fluidly connected to head 16 via a corresponding conduit (not shown). In another embodiment, however, the pressure may be generated completely inside of head 16 by a similar type of device. In yet other embodiments, the matrix material may be gravity-fed into and/or through head 16. For example, the matrix material may be fed into head 16, and pushed or pulled out of head 16 along with one or more continuous reinforcements. In some instances, the matrix material inside head 16 may need to be kept cool and/or dark in order to inhibit premature curing or otherwise obtain a desired rate of curing after discharge. In other instances, the matrix material may need to be kept warm for similar reasons. In either situation, head 16 may be specially configured (e.g., insulated, temperature-controlled, shielded, etc.) to provide for these needs.

[0016] The matrix material may be used to coat any number of continuous reinforcements (e.g., separate fibers, tows, rovings, socks, and/or sheets of continuous material) and, together with the reinforcements, make up a portion (e.g., a wall) of composite structure 12. The reinforcements may be stored within (e.g., on one or more separate internal spools - not shown) or otherwise passed through head 16 (e.g., fed from one or more external spools 17 –shown only

in Fig. 2). When multiple reinforcements are simultaneously used, the reinforcements may be of the same material composition and have the same sizing and cross-sectional shape (e.g., circular, square, rectangular, etc.), or a different material composition with different sizing and/or cross-sectional shapes. The reinforcements may include, for example, carbon fibers, vegetable fibers, wood fibers, mineral fibers, glass fibers, metallic wires, optical tubes, etc. It should be noted that the term "reinforcement" is meant to encompass both structural and non-structural types of continuous materials that are at least partially encased in the matrix material discharging from head 16.

[0017] The reinforcements may be exposed to (e.g., at least partially coated with) the matrix material while the reinforcements are inside head 16, while the reinforcements are being passed to head 16, and/or while the reinforcements are discharging from head 16. The matrix material, dry reinforcements, and/or reinforcements that are already exposed to the matrix material may be transported into head 16 in any manner apparent to one skilled in the art. In some embodiments, a filler material (e.g., chopped fibers) may be mixed with the matrix material before and/or after the matrix material coats the continuous reinforcements.

[0018] One or more cure enhancers (e.g., a UV light, an ultrasonic emitter, a laser, a heater, a catalyst dispenser, etc.) 18 may be mounted proximate (e.g., within, on, or adjacent) head 16 and configured to enhance a cure rate and/or quality of the matrix material as it is discharged from head 16. Each cure enhancer 18 may be controlled to selectively expose portions of structure 12 to energy (e.g., UV light, electromagnetic radiation, vibrations, heat, a chemical catalyst, etc.) during the formation of structure 12. The energy may increase a rate of chemical reaction occurring within the matrix material, sinter the material, harden the material, or otherwise cause the material to cure as it discharges from head 16. In the depicted embodiments, cure enhancer 18 includes multiple LEDs (e.g., 6 different LEDs) that are equally distributed about a center axis of head 16. However, it is contemplated that any number of LEDs or other energy sources could alternatively be utilized for the disclosed purposes and/or arranged in another manner (e.g., unequally distributed). The amount of energy produced by cure enhancer 18 may be sufficient to cure the matrix material before structure 12 axially grows more than a predetermined length away from head 16. In one embodiment, structure 12 is completely cured before the axial growth length becomes equal to an external diameter of the matrix-coated reinforcement. In another

embodiment, only an outer shell of structure 12 is cured before the axial growth length becomes equal to an external diameter of the matrix-coated reinforcement.

[0019] The matrix material and/or reinforcement may be discharged from head 16 via at least two different modes of operation. In a first mode of operation, the matrix material and/or reinforcement are extruded (e.g., pushed under pressure and/or mechanical force) from head 16, as head 16 is moved by support 14 to create the 3-dimensional trajectory within a longitudinal axis of structure 12. In a second mode of operation, at least the reinforcement is pulled from head 16, such that a tensile stress is created in the reinforcement during discharge. In this mode of operation, the matrix material may cling to the reinforcement and thereby also be pulled from head 16 along with the reinforcement, and/or the matrix material may be discharged from head 16 under pressure along with the pulled reinforcement. In the second mode of operation, where the matrix material is being pulled from head 16 with the reinforcement, the resulting tension in the reinforcement may increase a strength of structure 12 (e.g., by aligning the reinforcements, inhibiting buckling, compressing the matrix, ensuring distributed reinforcement loading, etc.), while also allowing for a greater length of unsupported structure 12 to have a straighter trajectory. That is, the tension in the reinforcement remaining after curing of the matrix material may act against the force of gravity (e.g., directly and/or indirectly by creating moments that oppose gravity) to provide support for structure 12.

[0020] The reinforcement may be pulled from head 16, as a result of head 16 moving away from an anchor point 20. In particular, at the start of structure formation, a length of matrix-impregnated reinforcement may be pulled and/or pushed from head 16, deposited onto anchor point 20, and cured such that the discharged material adheres (or is otherwise coupled) to anchor point 20. Thereafter, head 16 may be moved away from anchor point 20, and the relative movement may cause the reinforcement to be pulled from head 16. It should be noted that the movement of reinforcement through head 16 could be assisted (e.g., via internal head mechanisms), if desired. However, the discharge rate of reinforcement from head 16 may primarily be the result of relative movement between head 16 and anchor point 20, such that tension is created within the reinforcement. It is contemplated that anchor point 20 could be moved away from head 16 instead of or in addition to head 16 being moved away from anchor point 20.

[0021] A controller 22 may be provided and communicatively coupled with support 14, head 16, and any number of cure enhancers 18. Each controller 22 may embody a single processor or multiple processors that are configured to control an operation of system 10. Controller 22 may include one or more general or special purpose processors or microprocessors. Controller 22 may further include or be associated with a memory for storing data such as, for example, design limits, performance characteristics, operational instructions, tool paths, and corresponding parameters of each component of system 10. Various other known circuits may be associated with controller 22, including power supply circuitry, signal-conditioning circuitry, solenoid driver circuitry, communication circuitry, and other appropriate circuitry. Moreover, controller 22 may be capable of communicating with other components of system 10 via wired and/or wireless transmission.

[0022] One or more maps may be stored in the memory of controller 22 and used during fabrication of structure 12. Each of these maps may include a collection of data in the form of lookup tables, graphs, and/or equations. In the disclosed embodiment, the maps may be used by controller 22 to determine the movements of head 16 required to produce the desired size, shape, and/or contour of structure 12, and to regulate operation of cure enhancers 18 (and/or other components of system 10) in coordination with the movements.

[0023] An exemplary head 16 is disclosed in detail in Figs. 2 and 3. Head 16 may include, among other things, a matrix reservoir 24 and a nozzle 26 removably and fluidly connected to matrix reservoir 24. In this example, nozzle 26 is single path nozzle configured to discharge composite material having a generally circular cross-section. The configuration of head 16, however, may allow nozzle 26 to be swapped out for another nozzle (not shown) that discharges composite material having a different shape (e.g., a tubular cross-section, a linear cross-section, a rectangular cross-section, a triangular cross-section, etc.).

[0024] An internal volume of matrix reservoir 24 may communicate with nozzle 26 via a central opening 28. In the disclosed embodiment, matrix reservoir 24 has a generally circular cross-section, and tapers radially inward to central opening 28. A size (e.g., diameter and/or height) of matrix reservoir 24 may be sufficient to hold a supply of matrix material necessary for wetting reinforcements passing through nozzle 26. It should be noted that matrix reservoir 24 could have a cross-sectional shape other than circular, if desired.

[0025] During operation of head 16, care should be taken to ensure that an adequate amount of the matrix material (e.g., enough matrix material to ensure a minimum saturation level of the associated reinforcements) is always within matrix reservoir 24. In one embodiment, the matrix material is supplied to matrix reservoir 24 by way of a supply 32 and/or a valve 34. Supply 32 may be, for example, a pump or an elevated tank that generates a pressure (e.g., in response to a signal from controller 22) sufficient to cause the matrix material to flow into matrix reservoir 24. Valve 34 may be fluidly disposed between supply 32 and matrix reservoir 24, and moveable (e.g., in response to a signal from controller 22) to any position between a flow-passing position and a flow-blocking position to selectively meter the matrix material into matrix reservoir 24. It is contemplated that valve 34 may be omitted, in some applications, with operation of supply 32 alone being sufficient to meter the matrix material into matrix reservoir 24.

[0026] The matrix material may be selectively metered (e.g., via operation of supply 32 and/or valve 34) in response to an indication of an amount of matrix material inside of matrix reservoir 24 and/or a saturation level of the reinforcements passing through matrix reservoir 24 or discharging from nozzle 26. This indication may be provided, for example, via one or more sensors 36. For example, when sensor(s) 36 indicate that the amount of matrix material in reservoir 24 and/or a saturation level of the reinforcements is below a threshold amount/level, controller 22 may generate a command directed to supply 32 and/or valve 34, causing additional matrix material to be metered into matrix reservoir 24. And when sensor(s) 36 indicate that the amount of matrix material in reservoir 24 and/or a saturation level of the reinforcements is at or above the threshold amount/level, controller 22 may stop generating the command (or alternatively generate a stop command), causing metering of the matrix material to be halted.

[0027] In one embodiment, four different sensors 36A are utilized and placed around an upper end of matrix reservoir 24 (e.g., at an end opposite nozzle 26). These sensors 36A may be annularly distributed about a periphery of matrix reservoir 24, and separated by an angle α (shown in Fig. 3). In one example, angle α is about (e.g., within engineering tolerances of) 90°. In this embodiment, sensors 36A may be, for example, LIDAR, RADAR, ultrasonic, infrared, and/or stereoscopic optical-type sensors that are configured to detect a surface level location of the matrix material. The annular distribution of sensors 36A may allow for detection of the surface level location regardless of tilting of head 16. In this arrangement, signals from one or more of sensors 36A may be used together to determine the amount of matrix material inside of matrix reservoir 24 at any

given time. It is contemplated that a greater or lesser number (e.g., three) sensors could be utilized, as desired.

[0028] In another embodiment, a single sensor 36B is located at a lower end of matrix reservoir 24 (e.g., adjacent an inlet to nozzle 26) and used in conjunction with one or more sensors 36A located at an upper end of matrix reservoir 24. In this embodiment, sensors 36 may be, for example, contact sensors, which are configured to generate signals indicative of direct contact being made with the matrix material.

[0029] In yet another embodiment, one or more acoustic-type sensors 36C could be located anywhere within head 16. In this embodiment, sensor(s) 36 may generate a vibration within head 16, and receive back a corresponding reflection of this vibration (e.g., a standing wave). A comparison of the generated vibration and the received reflection may provide an indication of an amount of the matrix material inside of matrix reservoir 24.

[0030] In a final embodiment, one or more saturation sensors 36D may be located at the lower end of matrix reservoir 24 (e.g., inside of opening 28 and/or nozzle 26) and configured to determine an amount of the matrix material saturated into the reinforcement just prior to the reinforcement entering nozzle 26. Saturation sensor(s) 36 may be, for example, light sensors, current sensors, cameras, vibration sensors, and/or another type of sensor that directly measures a characteristic of the matrix-coated reinforcement (e.g., an opacity, a resistance, an appearance, a resonance, etc.) for comparison with expected characteristics of a sufficiently saturated reinforcement. Controller 22 may thereafter generate the commands discussed above based on the comparison.

Industrial Applicability

[0031] The disclosed system and print head may be used to continuously manufacture composite structures having any desired cross-sectional shape and length. The composite structures may include any number of different fibers of the same or different types and of the same or different diameters, and any number of different matrixes of the same or different makeup. Operation of system 10 will now be described in detail.

[0032] At a start of a manufacturing event, information regarding a desired structure 12 may be loaded into system 10 (e.g., into controller 22 that is responsible for regulating operations of support 14 and/or head 16). This information may include, among other things, a size (e.g.,

diameter, wall thickness, length, etc.), a contour (e.g., a trajectory), surface features (e.g., ridge size, location, thickness, length; flange size, location, thickness, length; etc.), connection geometry (e.g., locations and sizes of couplings, tees, splices, etc.), desired weave patterns, weave transition locations, etc. It should be noted that this information may alternatively or additionally be loaded into system 10 at different times and/or continuously during the manufacturing event, if desired. Based on the component information, one or more different reinforcements and/or matrix materials may be selectively installed and/or continuously supplied into system 10.

[0033] To install the reinforcements, individual fibers, tows, and/or ribbons may be passed through matrix reservoir 24 and nozzle 26. In some embodiments, the reinforcements may also need to be connected to a pulling machine (not shown) and/or to a mounting fixture (e.g., to anchor point 20). Installation of the matrix material may include filling head 16 (e.g., reservoir 24) and/or coupling of an extruder (not shown) to head 16.

[0034] The component information may then be used to control operation of system 10. For example, the reinforcements may be pulled and/or pushed along with the matrix material from head 16. Support 14 may also selectively move head 16 and/or anchor point 20 in a desired manner, such that an axis of the resulting structure 12 follows a desired three-dimensional trajectory. Cure enhancers 18 may be adjusted during operation to provide for desired curing conditions. Once structure 12 has grown to a desired length, structure 12 may be severed from system 10.

[0035] During operation, as matrix-wetted reinforcements are being discharged (e.g., pushed and/or pulled) from nozzle 26, a level of the matrix within reservoir 24 may lower. If unaccounted for, the reinforcements may eventually be discharged with less matrix than desired. Accordingly, as the level of matrix lowers and/or as the matrix-to-fiber ratio of discharging material is reduced, sensor(s) 36 may generate signals indicative of the amount of matrix within reservoir 24 and/or the ratio. These signals may be received and interpreted by controller 22, and controller 22 may selectively respond to the signals. For example, controller 22 may compare the actual level of matrix within reservoir 24 and/or the actual matrix-to-fiber ratio to one or more threshold (e.g., minimum and/or maximum) levels. As the actual level and/or ratio approaches and/or passes through the threshold level(s), controller 22 may selectively adjust

operation of supply 32 and/or valve 34 to either initiate or increase matrix flow into reservoir 24 or to slow or stop the matrix flow.

[0036] It will be apparent to those skilled in the art that various modifications and variations can be made to the disclosed system and print head. Other embodiments will be apparent to those skilled in the art from consideration of the specification and practice of the disclosed system and print head. It is intended that the specification and examples be considered as exemplary only, with a true scope being indicated by the following claims and their equivalents.

Claims

What is claimed is:

1. A print head for an additive manufacturing system, comprising:
a matrix reservoir configured to hold a supply of matrix;
a nozzle connected to an end of the matrix reservoir; and
a plurality of sensors located at an end of the matrix reservoir opposite the nozzle.

2. The print head of claim 1, wherein the plurality of sensors are distributed around a perimeter of the matrix reservoir.

3. The print head of claim 2, wherein an angle between adjacent sensors of the plurality of sensors is about 90°.

4. The print head of claim 2, wherein the plurality of sensors are fluid level sensors.

5. The print head of claim 4, wherein the plurality of sensors are acoustic sensors.

6. A print head for an additive manufacturing system, comprising:
a matrix reservoir;
a nozzle connected to an end of the matrix reservoir; and
a saturation sensor configured to generate a signal indicative of an amount of matrix saturated within a reinforcement passing through the nozzle.

7. The print head of claim 6, wherein the saturation sensor is located between the end of the matrix reservoir and the nozzle.

8. A print head for an additive manufacturing system, comprising:
a matrix reservoir having a first end and a second end;
a nozzle connected to the first end of the matrix reservoir;

a first matrix sensor located at the first end of the matrix reservoir; and

a second matrix sensor located at the second end of the matrix reservoir.

9. The print head of claim 8, wherein the first and second matrix sensors are contact sensors.

10. An additive manufacturing system, comprising:

a head configured to discharge a continuous reinforcement at least partially coated with a matrix, the head including:

a matrix reservoir; and

a nozzle connected to an end of the matrix reservoir;

a support configured to move the head during discharging;

a supply of matrix;

at least one sensor configured to generate a signal indicative of a matrix characteristic inside of the head; and

a controller configured to selectively affect the supply of matrix based on the signal.

11. The additive manufacturing system of claim 10, wherein:

the supply of matrix includes a pump; and

the controller is configured to selectively activate the pump based on the signal.

12. The additive manufacturing system of claim 10, wherein:

the supply of matrix includes a pump and a valve disposed between the pump and the matrix reservoir; and

the controller is configured to selectively activate the valve based on the signal.

13. The additive manufacturing system of claim 10, wherein the matrix characteristic is a level of matrix.

14. The additive manufacturing system of claim 10, wherein the matrix characteristic is a saturation amount of a reinforcement passing through the head.

15. The additive manufacturing system of claim 10, wherein:

the at least one sensor includes plurality of sensors distributed around a perimeter of the matrix reservoir; and

the controller is configured to determine a level of matrix inside of the matrix reservoir based on signals generated by all of the plurality of sensors.

16. The additive manufacturing system of claim 15, wherein the plurality of sensors are acoustic sensors.

17. The additive manufacturing system of claim 16, wherein an angle between adjacent sensors of the plurality of sensors is about 90°.

18. The additive manufacturing system of claim 10, wherein:

the at least one sensor includes a first sensor located at a first end of the matrix reservoir away from the nozzle, and a second sensor located at a second end of the matrix reservoir adjacent the nozzle; and

the controller is configured to determine a level of matrix inside of the matrix reservoir based on signals generated by both of the first and second sensors.

19. The additive manufacturing system of claim 18, wherein the first and second sensors are contact sensors.

20. The additive manufacturing system of claim 10, wherein the at least one sensor includes a saturation sensor located between the matrix reservoir and the nozzle.

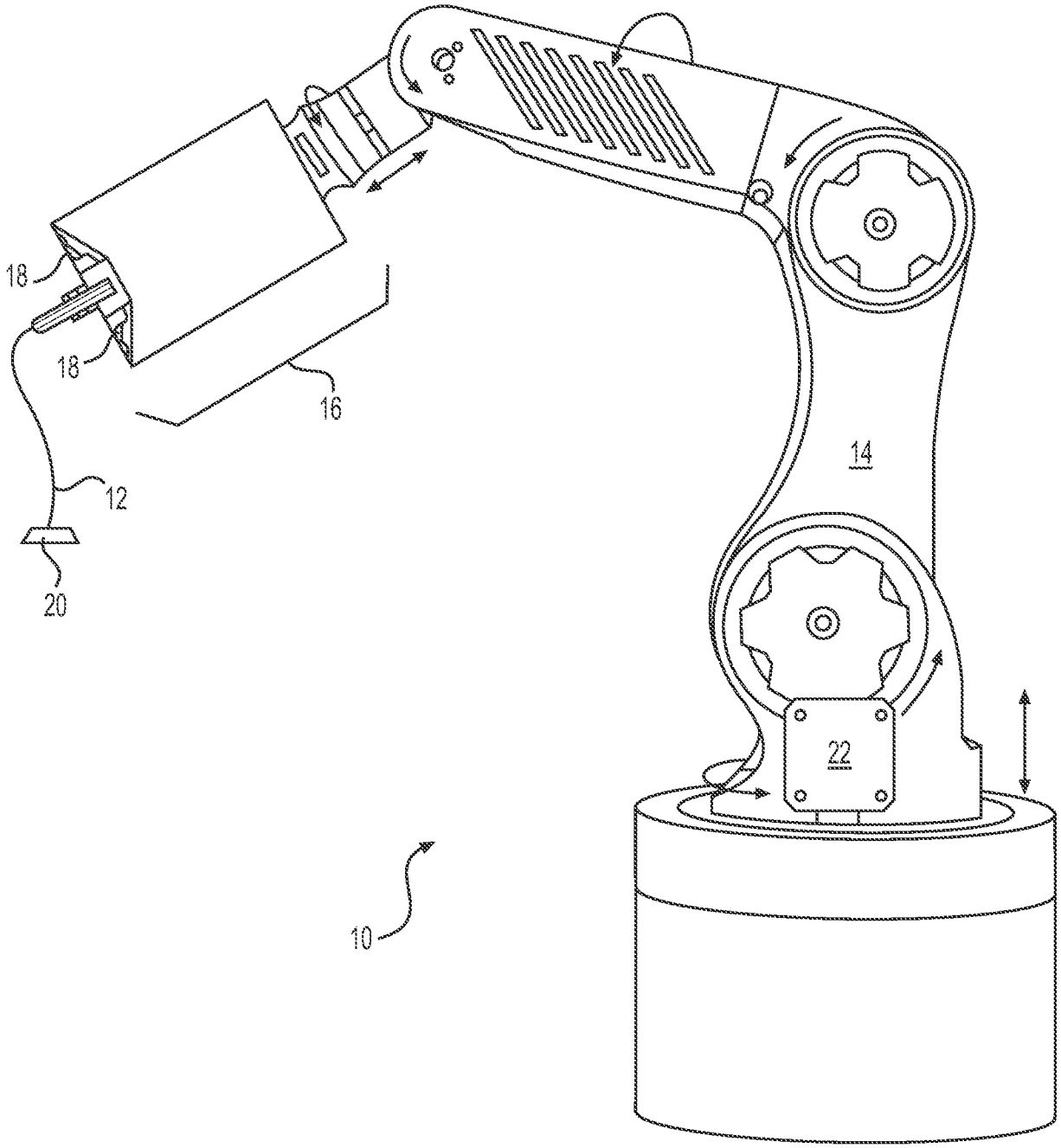

FIG. 1

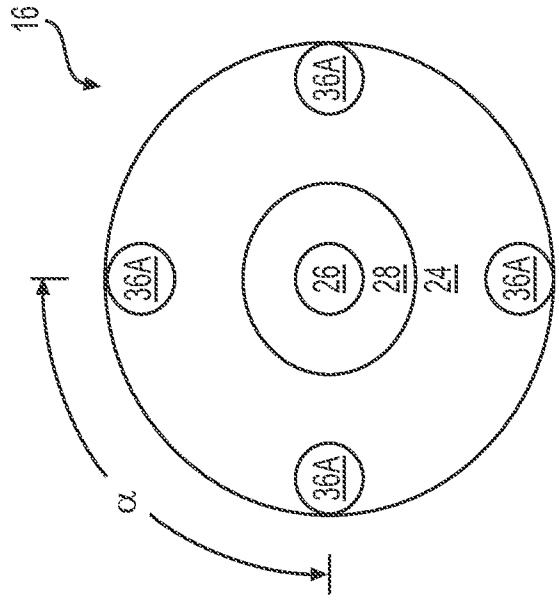
16
36A
36A
36A
36A
26
28
24
α

FIG. 3

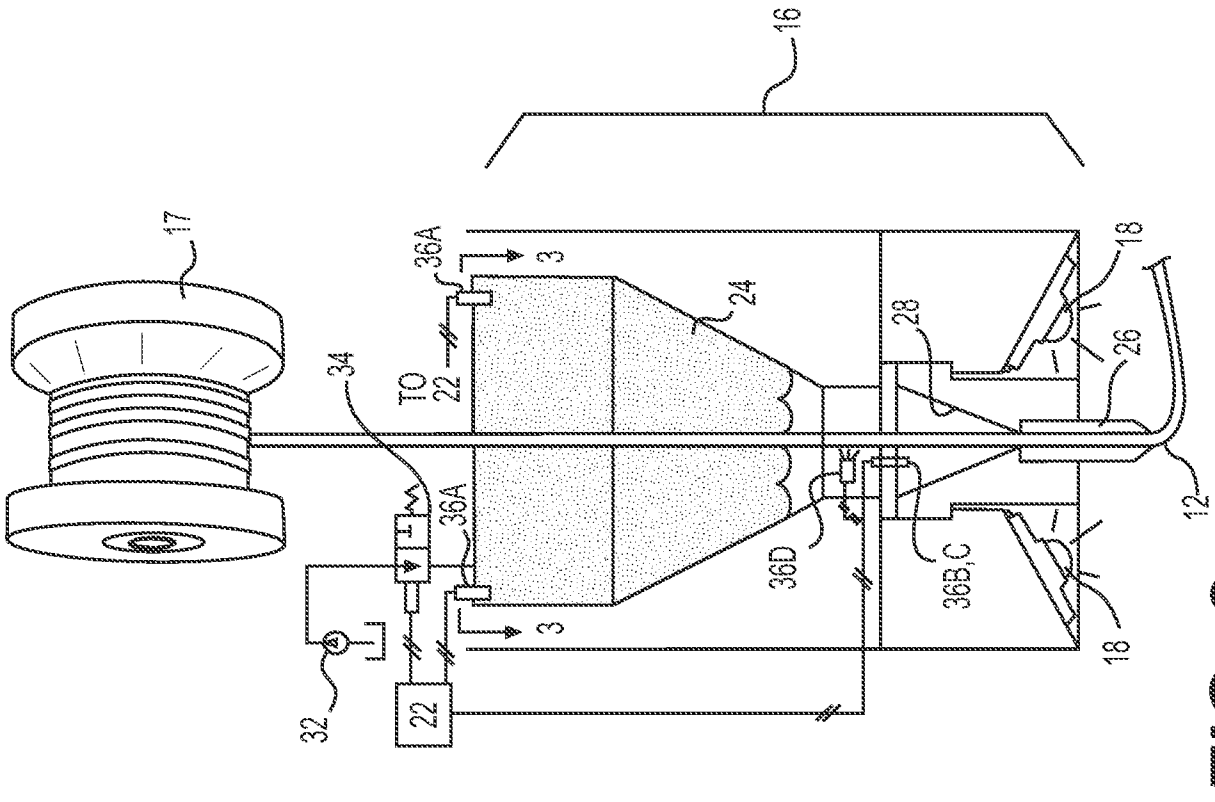
16
17
36A
3
TO
22
34
24
28
18
26
12
36A
36D
36B,C
18
3
32
22

FIG. 2

INTERNATIONAL SEARCH REPORT

International application No.
PCT/US18/59760

A. CLASSIFICATION OF SUBJECT MATTER
IPC - B33Y 10/00, 30/00, 50/00 (2018.01)
CPC - B33Y 10/00, 30/00, 50/00

According to International Patent Classification (IPC) or to both national classification and IPC

B. FIELDS SEARCHED

Minimum documentation searched (classification system followed by classification symbols)
See Search History document

Documentation searched other than minimum documentation to the extent that such documents are included in the fields searched
See Search History document

Electronic data base consulted during the international search (name of data base and, where practicable, search terms used)
See Search History document

C. DOCUMENTS CONSIDERED TO BE RELEVANT

Category*	Citation of document, with indication, where appropriate, of the relevant passages	Relevant to claim No.
X --- Y	US 2017/0122322 A1 (STRATASYS, INC.) 04 May 2017; figures 1, 2, and 6; paragraphs [0021, 0022, 0026, 0027, 0048, 0049, 0058, 0066, 0068].	1-4, 6, 7, 10-13 and 15 --- 5, 16, 17
X --- Y	US 2017/0028644 A1 (THE BOEING COMPANY) 02 February 2017; figures 1-3 and 22; paragraphs [0053, 0054, 0067-0069, 0072-0077, 0084, 0085, 0089, 0097-0106, 0293, 0301-0303].	1, 6-11, 13, 14, 18-20 --- 5, 16, 17
A	US 2017/0252816 A1 (DESKTOP METAL, INC.) 07 September 2017; entire document.	1-20

☐ Further documents are listed in the continuation of Box C. ☐ See patent family annex.

* Special categories of cited documents:
"A" document defining the general state of the art which is not considered to be of particular relevance
"E" earlier application or patent but published on or after the international filing date
"L" document which may throw doubts on priority claim(s) or which is cited to establish the publication date of another citation or other special reason (as specified)
"O" document referring to an oral disclosure, use, exhibition or other means
"P" document published prior to the international filing date but later than the priority date claimed
"T" later document published after the international filing date or priority date and not in conflict with the application but cited to understand the principle or theory underlying the invention
"X" document of particular relevance; the claimed invention cannot be considered novel or cannot be considered to involve an inventive step when the document is taken alone
"Y" document of particular relevance; the claimed invention cannot be considered to involve an inventive step when the document is combined with one or more other such documents, such combination being obvious to a person skilled in the art
"&" document member of the same patent family

Date of the actual completion of the international search	Date of mailing of the international search report
20 December 2018 (20.12.2018)	17 JAN 2019
Name and mailing address of the ISA/ Mail Stop PCT, Attn: ISA/US, Commissioner for Patents P.O. Box 1450, Alexandria, Virginia 22313-1450 Facsimile No. 571-273-8300	Authorized officer Shane Thomas PCT Helpdesk: 571-272-4300 PCT OSP: 571-272-7774

Form PCT/ISA/210 (second sheet) (January 2015)