March 24, 1931. L. E. GOENEN ET AL 1,797,911

CHAIR

Filed Dec. 20, 1926

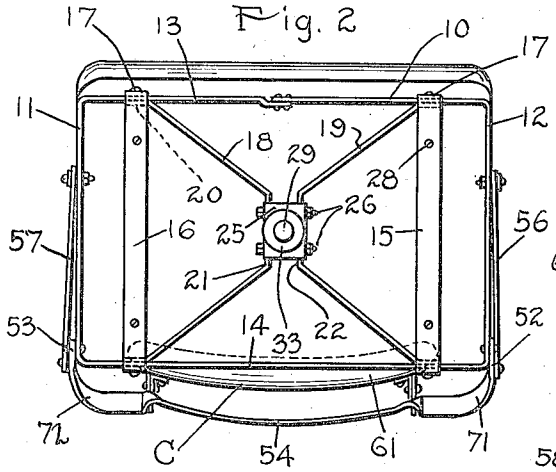

Fig. 2

Fig. 1

Fig. 4

Fig. 3

Inventors

Leo Edward Goenen,
James A. Garrow and
Andrew E. Fritz

By Alex. Sagaard

Attorney

Patented Mar. 24, 1931

1,797,911

UNITED STATES PATENT OFFICE

LEO EDWARD GOENEN, JAMES A. GARROW, AND ANDREW E. FRITZ, OF ST. PAUL, MINNESOTA, ASSIGNORS TO THE FRITZ-CROSS COMPANY, OF ST. PAUL, MINNESOTA, A CORPORATION OF MINNESOTA

CHAIR

Application filed December 20, 1926. Serial No. 156,024.

Our invention relates to chairs and has for its object to provide a chair adapted to seat the user in such a manner as to insure correct posture and greatest comfort.

An object of the invention resides in providing a seat having swivelly attached to it a vertical standard, which standard is adapted to be supported in a crown block carrying a plurality of outwardly spreading legs.

A still further object of the invention resides in constructing said crown block with a plurality of tubular bores, one of said bores being centrally located with respect to the others and of mounting said standard in said central bore and said legs in said outer bores.

A still further object of the invention resides in constructing said standard with a plurality of sockets and in forming said crown block with a reciprocable lock pin adapted to engage within the sockets in said standard.

A feature of the invention resides in constructing the end of said standard with a reduced portion adapted to be journalled in a head attached to the frame of the seat, said reduced portion carrying a washer lodged against the shoulder formed thereon for supporting the weight of the user and being further provided with a second washer riveted to the extreme end thereof.

Another object of the invention resides in fixedly pivoting to the rear ends of the frame of said seat a pair of uprights constructed of a single piece of bar metal formed near the upper portions thereof with a pair of spaced quarter twists to provide a curved bridge member connecting said uprights.

A still further object of the invention resides in fixedly hinging to said uprights a pair of braces, said braces being further adjustably mounted in serrated slots along the forward portions of the seat frame.

A still further feature of the invention resides in forming said uprights with slots along the upper portions thereof and in adjustably mounting cross bars at said upper portions, said cross bars having pivoted thereto brackets carrying a suitable back rest.

With the foregoing and other objects in view, which will appear in the following description, the invention resides in the novel combination and arrangement of parts and in the details of construction hereinafter described and claimed.

In the drawings:

Fig. 1 is a perspective view of our improved chair.

Fig. 2 is a bottom view of the seat proper detached from the legs or seat support.

Fig. 3 is a longitudinal sectional view of the swivel joint and crown block construction drawn to an enlarged scale.

Fig. 4 is an enlarged sectional detailed view taken on lines 4—4 of Fig. 1.

With ordinary chairs such as used in offices and factories where the same are continuously used by the occupants, considerable inefficiency of the occupant as well as mental and physical fatigue occurs where the posture of the occupant is of such nature as to cause the spine to assume an abnormally curved position. Our invention overcomes these disadvantages by providing a chair which is provided with a back rest adapted to engage the occupant of the chair in the small of the back so as to compel the assumption of a proper and efficient working posture, which back rest may be adjusted in numerous directions to be adaptable to various occupants.

The chair proper consists of a seat A carried by a seat support indicated in its entirety at B together with a back rest C. The seat A consists of a rectangular frame 10 formed with side members 11 and 12 and front members 13 and 14 riveted together as best shown in Fig. 2. Across the top of this frame are attached two U-shaped bars 15 and 16 which have portions 17 overlying the members 13 and 14 of frame 10 and by means of which said bars may be riveted to the frame. Within the interior of frame 10 are arranged two brackets 18 and 19 provided with ears 20 riveted to the frame members 13 and 14 through the same rivets attaching the portions 17 of bars 15 and 16 thereto. These brackets 18 and 19 are directed towards one another and are formed with two parallel portions 21 and 22 which fall short of one another at the center of the seat. These por-

tions are adapted to lie within grooves 23 and 24 formed in a rectangular head 25 and are securely attached thereto by means of bolts 26 which pass through said portions 21 and 22 of said brackets and through said head. The seat proper consists of a cushion 27 which may be of any suitable construction and which is directly attached to the bars 15 and 16 by means of screws 28 passing through said bars.

The seat A is supported upon a standard 29 which is preferably constructed of a round bar of metal and which is swivelly attached to the head 25 as shown in Fig. 3. The upper end 30 of this standard is turned down to form a shoulder 31 and is journalled in a longitudinal bore 32 in head 25. A washer 33 fits snugly around the turned portion 30 of standard 29 and is seated against the shoulder 31 on one side and against the lowermost portion of head 25 on its other side. This washer serves to carry the weight of the chair and the occupant and tranfers the load from the frame of the seat A to the standard 29. The extreme end 34 of standard 29 is further reduced to receive a second washer 35 which engages the upper portion of the head 25, which reduced portion is adapted to be riveted to cap the said second washer 25 and hold the structure assembled. By means of this construction it will be noted that the seat A is swivelly connected to the standard 29 and that the same is rigidly supported thereon.

The seat support B includes a crown block 36 which is preferably a casting formed with a central bore 37 and a plurality of circumferentially arranged bores 38 symmetrically disposed about the bore 37. The standard 29 is slidably mounted in the bore 37 and is adjustably held supported therein by a device to be presently described, while a plurality of outwardly extending tubular legs 39, 40, 41 and 42 are mounted in the bores 38. It will be noted that the bore 37 extends completely through the crown block 36 while the bores 38 terminate short of the top of the said crown block so as to hold the tubular legs 39, 40, 41 and 42 from projecting through the same and provide a cap for obscuring the upper ends thereof. The legs 39, 40, 41 and 42 are curved or bent in any suitable manner so as to bring the extreme ends thereof outwardly from the crown block 36 so as to support the seat in a stable manner. To the ends of these legs may be attached casters 43 of any suitable design.

For holding the standard 29 in adjustable position relative to the crown block 36 a locking device shown in Fig. 3 is employed. This device consists of a lock pin 44 provided with a stem 45 having knurled head 46 attached to the end of the same. Stem 45 of this lock pin passes through an opening 90 in a wall of the crown block 36 while the lock pin proper is slidably mounted in a transverse bore 47 formed in said crown block in such a position as to engage any of a number of depressions or sockets 48 formed along the standard 29. This bore which is larger in diameter than opening 90 communicates with said opening and extends completely through the crown block to permit of assembling the lock pin structure. A coil spring 49 seated at one end against the interior wall of crown block 36 and at its other end against the lock pin 44 is also assembled through bore 47 and serves to hold the lock pin at all times in engagement with the respective socket 48 with which it is associated. It hence becomes apparent that by withdrawing lock pin 44 from engagement with its respective socket through the agency of the head 46, seat A may be raised and lowered at will, until the said lock pin comes in registration with one of said sockets, at which time the standard 29 becomes securely locked to the crown block. It is to be noted that the swiveling of the seat is entirely independent of the locking device for attaching the standard to the seat support.

The back rest C is carried upon a back rest support best shown in Fig. 1. This support is constructed from a single bar of metal which is formed with a pair of spaced quarter twists 50 and 51 intermediate the ends thereof to provide two spaced uprights 52 and 53 and a bridge member or cross bar 54 connecting the same at their upper ends. The uprights 52 and 53 are pivoted to the frame 10 at the rearward portion thereof by means of two rivets 55 which pass through said uprights and through the frame members 11 and 12. These frame members are further supported by means of two braces 56 and 57 which in turn are pivoted to said uprights intermediate the ends thereof by means of rivets 58, as best shown in Fig. 1. These braces are preferably curved, as shown, to offer as little obstruction as possible to the free movement of the occupant. Along the forward portions of the frame members 11 and 12 are formed serrated slots 59 which are adapted to receive bolts 60 passing through the forward ends of the braces 56. By means of these slots, braces 56 may be positioned with the bolt 60 thereof disposed in any of the serrations of said slots so as to hold the uprights 52 and 53 in any desired angular relation relative to seat A, thereby permitting the back rest C which is attached thereto to be properly adjusted to fit the back of the occupant.

The back rest C may be constructed in any suitable manner and consists preferably of a suitable cushion 61 which has attached to it two brackets 62 and 63. These brackets are pivotally secured to a pair of arms 64 and 65 which have two bolts 66 passing through the same and through two longitudinal slots 67 and 68 formed in the upper portions of the

uprights 52 and 53. By means of this construction the back rest C may be tilted on its pivotal connection to the arms 64 and 65 and may further be raised and lowered through the agency of the bolts 66 and the slots 67 and 68. For preventing the arms 64 and 65 from rotating the same are constructed along their upper and lower edges with ears 69 and 70 bent outwardly from the plane of the face thereof and adapted to fall within said slots as best shown in Fig. 4. These ears allow the said cross bars to be raised and lowered and at the same time prevent the same from rotating so that the said arms may be rigidly secured to the uprights in proper position. It will be noted that the uprights 52 and 53 are bent toward each other as indicated at 71 and 72 so as to bring the brackets 62 well within the edges of the cushion 61 and to further permit of using a cushion of suitable length.

In the use of the chair the standard 29 is first adjusted to seat the occupant at a proper height above the floor so that the occupant's feet rest firmly and in a natural position upon the floor. The height of the back rest C is then regulated until the said back rest reaches the occupant slightly above the small of the back. By next adjusting the forward ends of the braces 56 and 57 the said back rest can be adjusted laterally so as to just reach the occupant's back when the occupant's legs come up to the forward portion of the seat cushion 27 which, as noted in Fig. 1, is generously curved to offer no discomfort to the user. When in such position the body of the occupant is free along the forward and rearward portions of the chair due to the fact that the uprights 52 and 53 are spaced from one another at these points the entire width of the chair. At the same time the curvature of the braces 56 prevent interference of the same with the movement of the user, thus permitting free movement of the limbs in all directions.

The advantages of our invention are manifest. With the chair properly adjusted mental and physical fatigue of the occupant are prevented, resulting in increased efficiency and better health. The chair may be constructed of light material so that the same is readily moved about, requiring a minimum amount of energy in moving to and from the work. An extremely rigid construction is permitted, which, when once adjusted, will maintain its adjustment. The raising and lowering of the seat to accommodate the user for different heights of tables is rapidly and effectively accomplished by simply withdrawing the lock pin and allowing the same to retreat within the proper socket when the seat has been raised or lowered the required amount.

Changes in the specific form of our invention, as herein disclosed, may be made within the scope of what is claimed without departing from the spirit of our invention.

Having described our invention, what we claim as new and desire to protect by Letters Patent is:

1. A chair comprising a seat, legs for supporting said seat, uprights fixedly hinged to the seat near the back thereof, braces fixedly hinged to the uprights and adjustable longitudinally of said seat, slots formed in said uprights at the upper portions thereof, arms slidably mounted in said slots and a back rest pivoted to said arms.

2. A chair comprising a seat, legs for supporting said seat, a back rest, a back rest support therefor formed of a single bar of metal and comprising uprights, said bar being formed with a pair of spaced quarter twists to provide a bridge member conforming in formation to said back rest and means for adjustably supporting said back rest upon said uprights forwardly of said bridge member.

3. An adjustable back rest for chairs including an upright having a longitudinal slot in one end thereof, a plate associated with the slotted end of said upright and having parts to engage the end of said upright to hold the plate at right angles thereto, means passing through said plate and through the slotted end of said upright to adjustably secure said plate thereto, and a member pivoted to said plate and to which a back rest member is attached.

4. An adjustable back rest for chairs including an upright having a longitudinal slot in one end thereof, a plate associated with the slotted end of said upright and having parts to engage the end of said upright to hold the plate at right angles to said upright, a bolt having a nut thereon passing through said plate and through the slot in the end of said upright to secure said plate thereto, and a bracket pivoted to the front end of said plate and to which a back rest member is attached.

In testimony whereof, we have signed our names to this specification.

LEO EDWARD GOENEN.
JAMES A. GARROW.
ANDREW E. FRITZ.