Nov. 24, 1936. M. SAMPSON 2,061,953

TOY AEROPLANE AND CONTROL THEREFOR

Filed Feb. 12, 1936 2 Sheets-Sheet 1

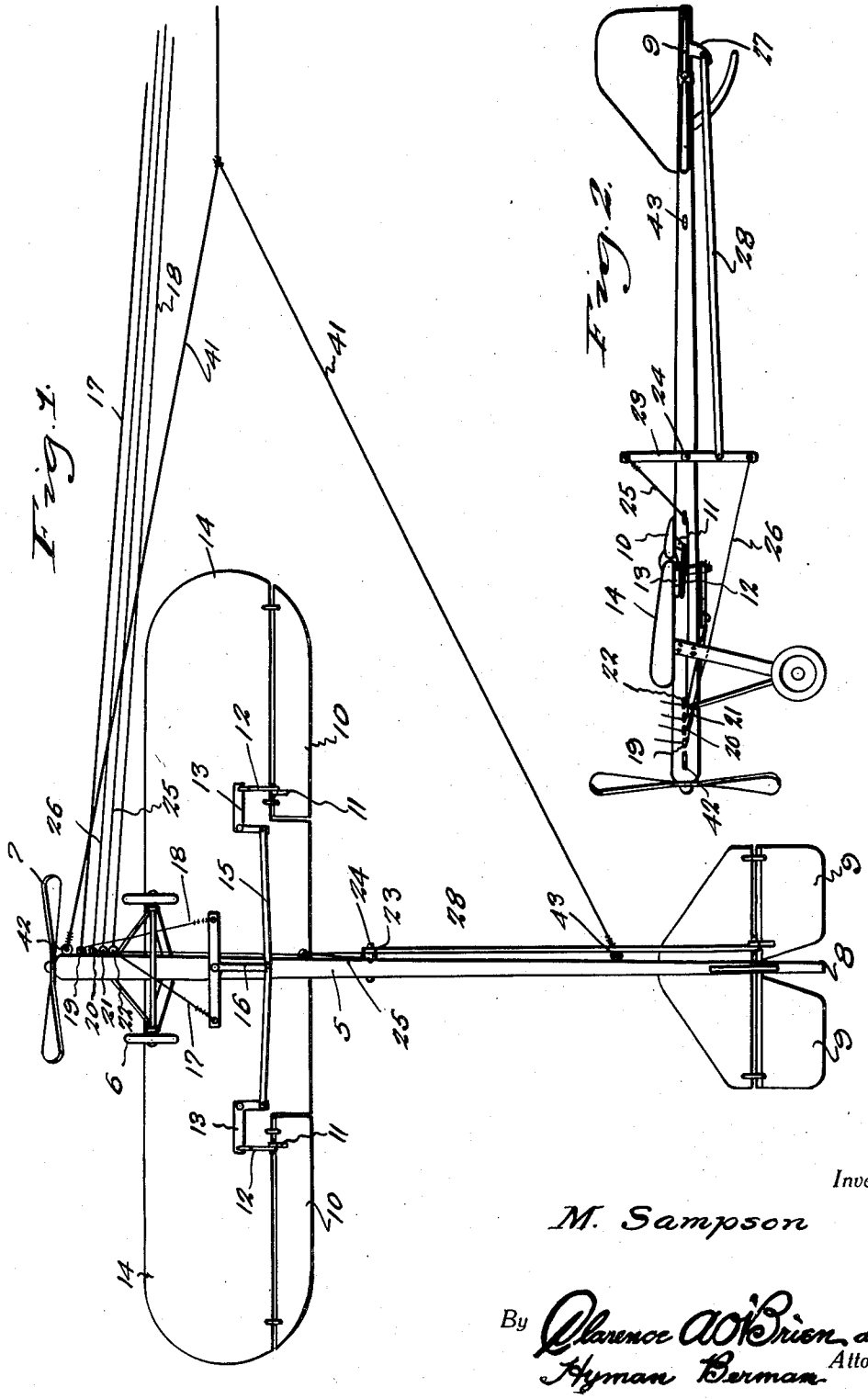

Fig. 1.

Fig. 2.

Inventor

M. Sampson

By Clarence A. O'Brien and Hyman Berman Attorneys

Nov. 24, 1936. M. SAMPSON 2,061,953

TOY AEROPLANE AND CONTROL THEREFOR

Filed Feb. 12, 1936 2 Sheets-Sheet 2

Fig. 3.

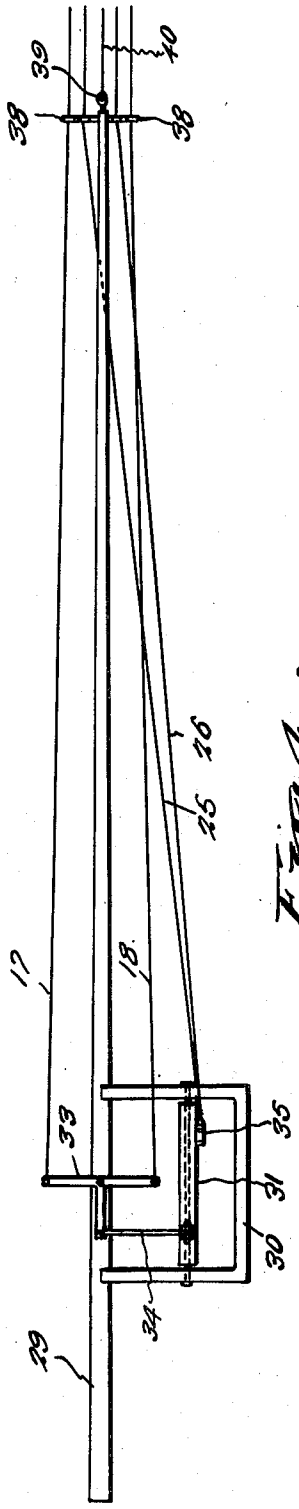

Fig. 4.

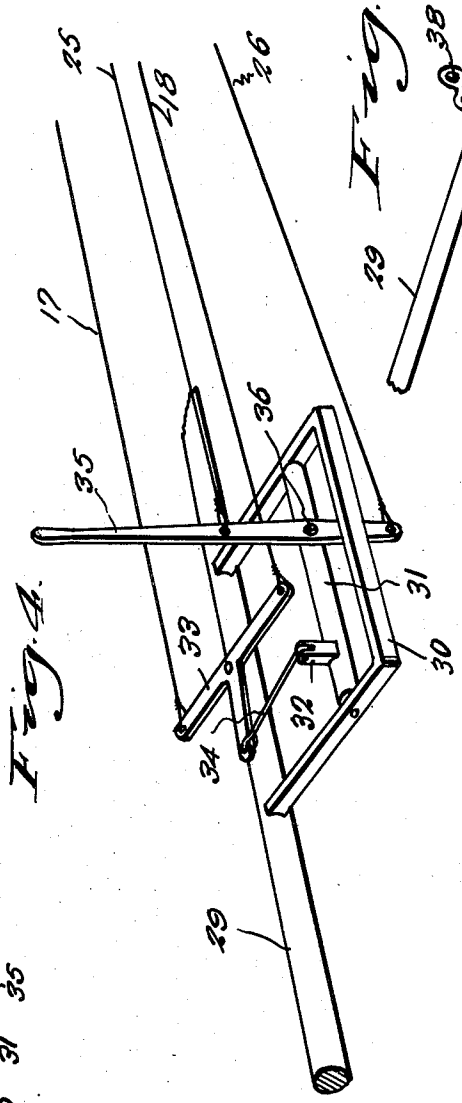

Fig. 5.

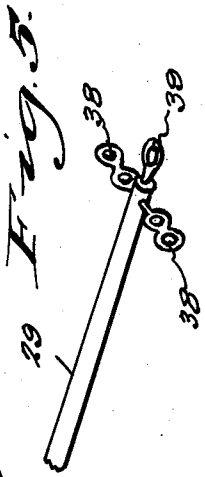

Inventor

M. Sampson

By Clarence A. O'Brien and Hyman Berman Attorneys

Patented Nov. 24, 1936 2,061,953

UNITED STATES PATENT OFFICE

2,061,953

TOY AEROPLANE AND CONTROL THEREFOR

Max Sampson, Gary, Ind.

Application February 12, 1936, Serial No. 63,651

1 Claim. (Cl. 46—76)

This invention appertains to new and useful improvements in amusement devices and more particularly to a toy aeroplane and control means for the same.

The principal object of the present invention is to provide a toy aeroplane and control means therefor whereby the aeroplane can be swung and manipulated from a distance to perform various antics.

Another important object of the invention is to provide a toy aeroplane and a mechanism therefor whereby the aeroplane can be operated to the amusement of children and even adults.

Other important objects and advantages of the invention will become apparent to the reader of the following specification.

In the drawings:

Figure 1 represents a bottom plan view of the toy aeroplane with the mechanism thereon whereby it can be operated remotely.

Figure 2 represents a side elevational view of the toy aeroplane.

Figure 3 represents a side elevational view of the remote controlling means.

Figure 4 represents a fragmentary perspective view of the remote controlling means.

Figure 5 represents a fragmentary perspective view of the tip of the pole shown in Figure 3.

Referring to the drawings wherein like numerals designate like parts, it can be seen that the toy aircraft consists of the fuselage beam 5 having small wheels 6 mounted adjacent the forward end thereof and on which is located the propeller 7. The tail portion of the fuselage beam 5 is provided with the rudder 8 and the elevators 9.

Numerals 10—10 represent the ailerons, each of which is provided with a depending arm 11 connected by a pivotal link 12 to a corresponding bell crank 13 on the adjacent wing 14. These bell cranks are connected by the rigid rod 15 to one end of the T-shaped swingable member 16 which has its remaining ends connected to the cables 17—18. At one side of the fuselage beam 5 adjacent the propeller 7 are the pulleys 19, 20, 21 and 22. These cables or strands 17—18 are disposed over the pulleys 19—22 respectively as clearly shown in Figure 1.

About midship, a vertically extending member 23 is pivotally connected to the fuselage 24 at its intermediate point. Extending from one end of this member 23 is the strand 25 which extends through the eye or pulley 21, while from the opposite end of the member 23 a strand 26 extends and passes through the eye or pulley 20.

The elevators 9 are connected together and one is provided with a depending arm 27. An elongated connecting rod 28 has its rear end pivotally connected to the arm 27 and its forward end pivotally connected to the member 23 below the pivot 24.

As is shown in Figures 3 and 4, the means for controlling the flight of the toy aircraft consists of the elongated pole 29 having a U-shaped frame 30 extending laterally therefrom. In this frame 30 is the rotary shaft 31 having the bifurcated ear 32 extending laterally therefrom. On the pole 29 adjacent the frame 30 is the T-shaped unit 33, one end of which is connected by the pivotal link 34 to the said ear 32. The aforementioned strands 25 and 26 connect to the hand lever 35 at opposite sides of the pivot 36, which pivot connects the hand lever 35 to the shaft 31 so that the hand lever is normally disposed at right angles to the shaft 31.

The remaining strands 17 and 18 connect to the remaining ends of the T-shaped unit 33 as is clearly shown in Figure 4. All of these strands extend through the laterally disposed eye members 38—38 at the tip of the pole 29. At the extremity of the pole 29 is the eye 39 from which extends the cable 40 which branches off into a pair of strands 41—41 adjacent the toy aeroplane, with one branch strand connected to the eye 42 adjacent the propeller 7 and the other connected to the eye 43 adjacent the tail of the plane.

Obviously, the pole 29 is held in the hand and swung around so that the aeroplane is started in flight. By operating the hand lever 35, the wires or strands 26—25 are manipulated for controlling the elevators so that the toy aircraft is caused to rise or drop in sliding like manner.

To cause banking of the toy aircraft, the shaft 31 is rotated by moving the hand lever 35 and this causes actuation of the strands 17—19 for raising or lowering the ailerons.

The pole 29 can be held in one hand and the flight of the plane controlled by actuating the hand lever 35 with the other hand.

Having described the invention, what is claimed as new is:

In combination, a toy aeroplane having adjustable elevation controlling elements, remote means for controlling the plane, said remote means consisting of a portable handle and flexible lines extending from the handle to said controlling elements, whereby the aeroplane can be swung and controlled.

MAX SAMPSON.