(12) INTERNATIONAL APPLICATION PUBLISHED UNDER THE PATENT COOPERATION TREATY (PCT)

(19) World Intellectual Property Organization
International Bureau

(43) International Publication Date
23 August 2018 (23.08.2018)

W ! P O | PCT

(10) International Publication Number
WO 2018/151746 Al

(51) International Patent Classification:
G07C 9/00 (2006.01)

(21) International Application Number:
PCT/US2017/033699

(22) International Filing Date:
19 May 2017 (19.05.2017)

(25) Filing Language: English

(26) Publication Language: English

(30) Priority Data:
15/437,291 20 February 2017 (20.02.2017) US

(72) Inventors; and
(71) Applicants: **HUFF, Ronald, James** [US/US]; 5740 San Felipe, #738, Houston, TX 77057 (US). **PENA, Pedro, Luis** [US/US]; 2914 SW 99 CT, Miami, FL 33165 (US).

(74) Agent: **TRIPP, Karen, Bryant;** Attorney at Law, P.O. Box 1301, Houston, TX 7725 1-1301 (US).

(81) Designated States *(unless otherwise indicated, for every kind of national protection available):* AE, AG, AL, AM, AO, AT, AU, AZ, BA, BB, BG, BH, BN, BR, BW, BY, BZ, CA, CH, CL, CN, CO, CR, CU, CZ, DE, DJ, DK, DM, DO, DZ, EC, EE, EG, ES, FI, GB, GD, GE, GH, GM, GT, HN, HR, HU, ID, IL, IN, IR, IS, JP, KE, KG, KH, KN, KP, KR, KW, KZ, LA, LC, LK, LR, LS, LU, LY, MA, MD, ME, MG, MK, MN, MW, MX, MY, MZ, NA, NG, NI, NO, NZ, OM, PA, PE, PG, PH, PL, PT, QA, RO, RS, RU, RW, SA, SC, SD, SE, SG, SK, SL, SM, ST, SV, SY, TH, TJ, TM, TN, TR, TT, TZ, UA, UG, US, UZ, VC, VN, ZA, ZM, ZW.

(84) Designated States *(unless otherwise indicated, for every kind of regional protection available):* ARIPO (BW, GH, GM, KE, LR, LS, MW, MZ, NA, RW, SD, SL, ST, SZ, TZ, UG, ZM, ZW), Eurasian (AM, AZ, BY, KG, KZ, RU, TJ,

(54) Title: IDENTIFICATION BADGE SYSTEM

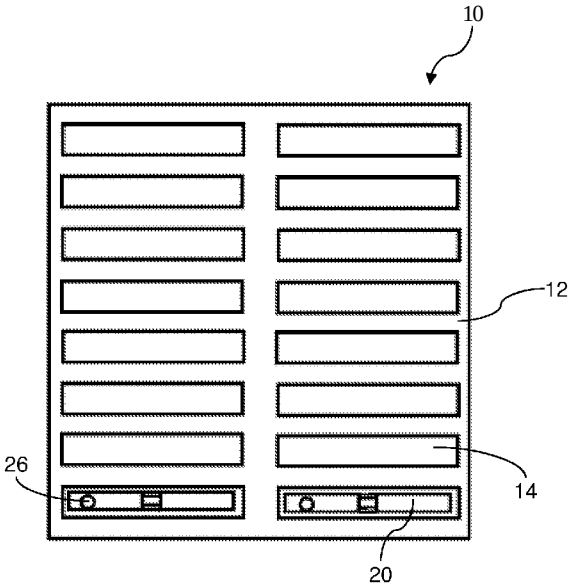

FIG. 2

(57) Abstract: An identification badge system has an image relaying device for communicating an electronic image of a person, a base station for communicating with the image relaying device, a readiness indicator and a reusable badge. The base station has at least one docking receptacle for docking the reusable badge. The reusable badge has a housing, and an e-paper display. The housing is adapted to be docked in the at least one docking receptacle of the base station, for communicating the electronic image from the base station to the e-paper display when the housing is docked in the at least one docking receptacle of the base station. The e-paper display is adapted to maintain the electronic image received from the image relaying device when the reusable badge is removed from the at least one docking receptacle of the base station. The readiness indicator is adapted to indicate when the base station has completed communication of the electronic image to the reusable badge, whereby the reusable badge is ready for use and removal from the base

WO 2018/151746 A1

[Continued on next page]

TM), European (AL, AT, BE, BG, CH, CY, CZ, DE, DK, EE, ES, FI, FR, GB, GR, HR, HU, IE, IS, IT, LT, LU, LV, MC, MK, MT, NL, NO, PL, PT, RO, RS, SE, SI, SK, SM, TR), OAPI (BF, BJ, CF, CG, CI, CM, GA, GN, GQ, GW, KM, ML, MR, NE, SN, TD, TG).

Published:

— *with international search report (Art. 21(3))*

station. The base station is adapted to erase the electronic image from the e-paper display when the reusable badge is re- docked into the at least one docking receptacle of the base station.

IDENTIFICATION BADGE SYSTEM

FIELD OF THE INVENTION

[0001] The present invention relates to a system for identification badges and, in particular, to a system for issuing and maintaining identification badges, especially visitor identification badges.

BACKGROUND OF THE INVENTION

[0002] Many employers require that employees wear badges for identifying authorized personnel in an employer's facility. Many of those employers, therefore, also require visitors to wear badges to confirm that the visitor has checked-in at a designated checkpoint. Beyond safeguarding against misuse of an employer's intellectual property, such check-in is often required so that, in the event of an emergency, all persons may be accounted for.

[0003] US7,733,23 1B2 (Carney et al) describes a security device with a printed portion and a display portion. The printed portion includes a printed photograph and printed information relating to the person's identification, occupation, security level, etc. The display portion may be an e-paper surface or other type of display, that displays information, by text or image, based on data from another security device. For example, the display portion may display the default information "Inactive," alongside the printed portion of the device. Carney et al describe a variety of embodiments of the security badge, many that are very complex in scope, but most relate to use by a person on a more permanent basis.

[0004] Such a security badge as described in Carney et al may be well-suited to a more permanent use by an employee. However, it is very complex for a visitor badge.

[0005] Some companies print visitor identification information on a label having an adhesive backing. Adhesive backings however often fail on some fabrics (for example, heavy woven wool), while being too aggressive on other fabrics (for example, lightweight silk). Alternatively, the label may be designed to be carried in a plastic sleeve that can be pinned or clipped to a visitor's article of clothing or hung from a visitor's neck with a lanyard, for example. Still other companies provide a generic "visitor" badge that demonstrates that the visitor has passed through an identification check-point and is authorized to be on site. However, many badges do not provide a display that can be readily authenticated by security personnel or other employees walking past a visitor in a hallway,

for example. Without an image of the person for whom the badge was intended, visitor badges may be inadvertently or fraudulently provided to unauthorized persons. Furthermore, label printers are notorious for breaking down or running out of ink at the most inopportune times, for example, when a large number of visitors arrive at the same time or a very important visitor is awaiting check-in.

[0006] There is a need for an identification badge system that is more easily implemented. There is also a need for an identification badge system that is reusable.

BRIEF DESCRIPTION OF THE DRAWINGS

[0007] The system of the present invention will be better understood by referring to the following detailed description of preferred embodiments and the drawings referenced therein, in which:

[0008] Fig. 1 is a front elevation view of one embodiment of an identification badge system of the present invention;

[0009] Fig. 2 is a top plan view of the identification badge system of Fig. 1;

[00010] Fig. 3 is a front elevation view of one embodiment of a reusable badge of the identification badge system of the present invention;

[0001 1] Fig. 4 is a perspective view of another embodiment of an identification badge system of the present invention;

[00012] Fig. 5 is a bottom plan view of another embodiment of a reusable badge of the identification badge system of the present invention;

[00013] Fig. 6A is a front elevation view of yet another embodiment of a reusable badge of the identification badge system of the present invention; and

[00014] Fig. 6B is a front elevation view of a further embodiment of a reusable badge of the identification badge system of the present invention.

SUMMARY OF THE INVENTION

[00015] According to one aspect of the present invention, there is provided an identification badge system, comprising: an image relaying device for communicating an electronic image of a person; a base station for communicating with the image relaying

device, the base station having at least one docking receptacle; a readiness indicator; and a reusable badge having a housing, and an e-paper display; the housing adapted to be docked in the at least one docking receptacle of the base station, for communicating the electronic image from the base station to the e-paper display when the housing is docked in the at least one docking receptacle of the base station; and the e-paper display adapted to maintain the electronic image received from the image relaying device when the reusable badge is removed from the at least one docking receptacle of the base station; the readiness indicator adapted to indicate when the base station has completed communication of the electronic image to the reusable badge, whereby the reusable badge is ready for use and removal from the base station; and wherein the base station is adapted to erase the electronic image from the e-paper display when the reusable badge is re-docked into the at least one docking receptacle of the base station.

DETAILED DESCRIPTION OF THE INVENTION

[00016] The present invention provides an identification badge system that is readily implemented at an identification checkpoint, for example, in the lobby of an employer's facility or other restricted access facility. The identification badge system of the present invention is also adaptable to receiving images of pre-authorized visitors or guests to a large function, conference, or the like.

[00017] Referring now to the drawings, Figs. 1 and 2 illustrate one embodiment of an identification badge system 10 of the present invention. The identification badge system 10 of the present invention has a base station 12. The base station 12 has at least one docking receptacle 14 for docking a reusable badge 20. In the embodiment shown in Figs. 1 and 2, the base station 12 has 16 docking receptacles 14 for receiving up to 16 reusable badges 20 at one time. Other numbers and configurations of docking receptacles 14 are possible without departing from the spirit of the present invention.

[00018] The base station 12 can be connected to a computer (not shown) for providing a user interface with the base station 12. Connection to a computer may be particularly advantageous at a permanent security or reception desk or office of a controlled access building for example. Alternatively, the base station 12 may be adapted to receive any required information for operating on a standalone basis. Such an operation may be particularly applicable at a check-in table at a conference or other large function where a

check-in table is set up on a temporary basis. The base station 12 may house a single board computer (not shown) that provides a user interface via a web browser.

[00019] In either case, the base station 12 is adapted to communicate with an image relaying device (not shown), directly, or indirectly through a computer. The image relaying device may be an image capture device, such as a camera or a scanner capable of scanning a photo ID of a visitor or guest. In this case, the operator of the identification badge system 10 of the present invention would authenticate the identification of the visitor or guest by comparing the photo ID to the face of the visitor or guest.

[00020] Alternatively, the image, along with any other identification, of a visitor or guest may be provided electronically in advance of the visitor or guest arrival. The data for the visitor or guest may be relayed to a computer that is connected to the base station. Or the data may be provided to the base station 12 with a portable drive, such as an external hard drive, a thumb drive, or the like. In such case, the visitor or guest may be provided with a barcode or QR code receipt, for example, for presenting to an operator of the identification badge system 10 of the present invention can scan with a barcode reader or QR code reader to produce an image on the reusable badge 20.

[00021] This is particularly advantageous when a large group of visitors or guests are expected to arrive concurrently, for example, in time for a meeting, or for VIP guests who do not have time to wait for a long authentication and printing process. This is also advantageous, for example, at a conference or other event, where visitors or guests are required to pre-register and/or pre-pay for access to the conference. The visitor or guest may be provided with a barcode or QR code receipt, after pre-registering and uploading an electronic image of themselves. Then when they arrive at the check-in desk, they provide the receipt, which the greeter scans the information with a barcode reader or QR code reader to bring up the electronic image for relaying to the base station 12, and authenticates the identification of the visitor or guest by comparing the photo ID to the face of the visitor or guest.

[00022] One embodiment of the reusable badge 20 of the present invention is illustrated more clearly in Fig. 3. The reusable badge 20 has a housing 22, an e-paper display 24, and a readiness indicator. The readiness indicator is depicted in Figs. 1- 3 as an indicator light 26. However, it will be understood by those skilled in the art that the readiness indicator may be

a lit-up backlight on the e-paper display or an audible signal (not shown), without departing from the spirit of the invention.

[00023] The housing 22 is preferably made of plastic to protect the e-paper display 24, while being lightweight enough so as not to overly burden the visitor or guest. The housing 22 is provided with suitable contacts on its base, sides or back for communicating with the base station 12 when the reusable badge 20 is docked in the docking receptacle 14. In the embodiment shown in Fig. 3, contacts 42 are provided on the front face of the housing 22 for contacting corresponding base station contacts (not shown). It will be understood by those skilled in the art that other numbers or configurations of contacts 42 may be possible without departing from the spirit of the present invention.

[00024] The housing 22 is preferably provided with a loop 28 to enable a visitor or guest to carry the resuable badge 20 with a lanyard, strap, clip or the like.

[00025] The e-paper display 24 may be provided with e-ink, which is an electrophoretic display composed of a large number of light and dark nanoparticles suspended between two plates of electrostatically-charged glass. E-paper mimics the appearance of ink in an electronic display. The display may be black and white or colored, depending on the requirements and/or wishes of the employer and/or event. Suitable electronic displays can be provided by a variety of technologies, including, without limitation, electrophoretic, electrowetting, electrofluidic, interferometric modulator, and plasmonic techniques.

[00026] An image 30 of the visitor or guest is transmitted from the image relaying device to the base station 12 and is communicated to the reusable badge 20 when the reusable badge 20 is docked in the base station 12.

[00027] Preferably, additional information 32 including, without limitation, the visitor or guest name, company name, name of person being visited, phone number of person being visited, expected duration of stay, company logo of visitor or guest, logo of event or company being visited, and the like.

[00028] In another embodiment, an identifying symbol, such as a bar code 34 or QR code is relayed through the base station 12 to the e-paper display 24. The identifying symbol may include further detail on the visitor or guest, authorization to access special events, such as pre-paid lunches, within a larger event, important medical or allergy information, ICE numbers, and the like.

[00029] The indicator light 26 signals that the base station 12 has completed communication of the electronic image 20 and any additional information 32 and/or identifying symbol 34 to the e-paper display 24. The indicator light 26 signals that the reusable badge 20 may be removed from the base station 12. The e-paper display 24 maintains the electronic image 30 after the reusable badge 20 is removed from the base station 12, without the need for a power supply in the reusable badge 20.

[00030] Another embodiment of the identification badge system 10 of the present invention is shown in Figs. 4 and 5. In this embodiment, reusable badges 20 are stacked in a single docking receptacle 14. Contacts 42 are provided on the base of the reusable badge 20 and are configured to engage corresponding contacts 44 on an inner back face of the docking receptacle 14.

[00031] Also in the embodiment shown in Figs. 4 and 5, the readiness indicator is an indicator light 46 on the base station 12. The indicator light 46 signals that the reusable badge 20 may be removed from the base station 12. The e-paper display 24 maintains the electronic image 30 after the reusable badge 20 is removed from the base station 12, without the need for a power supply in the reusable badge 20.

[00032] In a further embodiment, the reusable badge 20 has an RFID tag (not shown) housed in the housing 22. Preferably, the RFID tag is a HF RFID tag or a UHF RFID tag.

[00033] The RFID tag is adapted to communicate with an RFID reader, for example, equipped within the base station 12. Alternatively, the RFID reader may be a separate piece of equipment. Preferably, the base station 12 is equipped with an RFID reader (not shown).

[00034] The RFID tag may be used to provide tracking information, including, without limitation, a time stamp for removing the reusable badge from the base station, a time stamp for re-docking the reusable badge at the base station, electronic image 30 information, electronic identity information associated with the electronic image 30, accountable person information, authentication information, and combinations thereof.

[00035] In another embodiment, the reusable badge 20 is provided with a power supply, for example a battery (not shown) or a capacitor (not shown).

[00036] For example, a capacitor may be provided to hold a charge sufficient to erase the electronic image 30 from the e-paper display 24 if the reusable badge 20 is not re-docked within a prescribed period of time. Alternatively, the capacitor may provide a charge

sufficient to overwrite the electronic image from the e-paper display if the reusable badge is not re-docked within a prescribed period of time, for example, with a message indicating that the reusable badge 20 has expired, with a pictorial image, a text image, a notice to call a security phone number, a prescribed expiration color, cross-hatching and combinations thereof.

[00037] In yet another embodiment, a battery, which may be a reusable battery, is provided, for example, to allow a visitor or guest to access informational or safety information, for example, on a second page of the reusable badge 20, as explained for the embodiments of Figs. 6A and 6B.

[00038] Figs. 6A and 6B illustrate further embodiments of the reusable badge 20 of the identification badge system 10 of the present invention. Often when visitor or guests are checked-in at a restricted access facility, they are provided with an additional pamphlet with safety information, including, for example, a fire escape map. The e-paper display 24 of the present invention can be configured to allow for a finger-swipe, for example, to at least one additional display page of the e-paper display 24 showing safety information, for example, a fire escape plan 36, as depicted in Fig. 6A. Other types of safety information may include emergency numbers, laboratory safety precautions, information about site-specific dangers, and the like. Preferably, the e-paper display 24 defaults back to the electronic image 30 within a prescribed period of time.

[00039] Alternatively, or in addition to the safety information, the e-paper display 24 of the present invention can be configured to include at least one additional page for a conference or meeting itinerary 38, as illustrated in Fig. 6B.

[00040] While preferred embodiments of the present disclosure have been described, it should be understood that various changes, adaptations and modifications can be made therein without departing from the spirit of the invention(s) as claimed below.

WHAT IS CLAIMED IS:

1. An identification badge system, comprising:
   - an image relaying device for communicating an electronic image of a person;
   - a base station for communicating with the image relaying device, the base station having at least one docking receptacle;
   - a readiness indicator; and
   - a reusable badge having a housing and an e-paper display;
     - the housing adapted to be docked in the at least one docking receptacle of the base station, for communicating the electronic image from the base station to the e-paper display when the housing is docked in the at least one docking receptacle of the base station; and
     - the e-paper display adapted to maintain the electronic image received from the image relaying device when the reusable badge is removed from the at least one docking receptacle of the base station;

   the readiness indicator adapted to indicate when the base station has completed communication of the electronic image to the reusable badge, whereby the reusable badge is ready for use and removal from the base station; and wherein the base station is adapted to erase the electronic image from the e-paper display when the reusable badge is re-docked into the at least one docking receptacle of the base station.
2. The identification badge system according to claim 1, wherein the reusable badge further comprises an RFID tag.
3. The identification badge system according to claim 2, wherein the base station further comprises an RFID reader for communicating with the RFID tag, whereby tracking information is communicated to the base station.

4. The identification badge system according to claim 2, wherein the RFID tag is selected from the group consisting of HF RFID tags, UHF RFID tags, and combinations thereof.

5. The identification badge system according to claim 3, wherein tracking information is selected from the group consisting of a time stamp for removing the reusable badge from the base station, a time stamp for re-docking the reusable badge at the base station, electronic image information, electronic identity information associated with the electronic image, accountable person information, authentication information, and combinations thereof.

6. The identification badge system according to claim 1, wherein the reusable badge further comprises a power supply.

7. The identification badge system according to claim 6, wherein the power supply is a capacitor for holding a charge sufficient to erase the electronic image from the e-paper display if the reusable badge is not re-docked within a prescribed period of time.

8. The identification badge system according to claim 6, wherein the power supply is a capacitor for holding a charge sufficient to overwrite the electronic image from the e-paper display if the reusable badge is not re-docked within a prescribed period of time.

9. The identification badge system according to claim 8, wherein the electronic badge is overwritten with a message that the electronic badge has expired, wherein the message is selected from the group consisting of an expiration pictorial image, an expiration text image, a security phone number, an expiration color, cross-hatching, and combinations thereof.

10. The identification badge system according to claim 6, wherein the power supply is a battery.
11. The identification badge system according to claim 10, wherein e-paper display further comprises at least one additional page.
12. The identification badge system according to claim 1, wherein the at least one additional page includes information selected from the group consisting of a fire escape plan, an emergency number, laboratory safety precautions, information about a site-specific danger, meeting agenda, a conference itinerary, and combinations thereof.
13. The identification badge system according to claim 1, wherein the image relaying device is selected from the group consisting of a scanner, a camera, a QR reader, a bar code reader, and combinations thereof.
14. The identification badge system according to claim 1, wherein the base station is adapted to dock a plurality of reusable badges.
15. The identification badge system according to claim 1, wherein the base station is adapted to connect to a computer.
16. The identification badge system according to claim 1, wherein the base station is further adapted to communicate additional identification information to the reusable badge.
17. The identification badge system according to claim 16, wherein the additional information is displayed on the e-paper display.
18. The identification badge system according to claim 17, wherein the additional information is displayed in the form of text, a bar-code, a QR code, or a combination thereof.

19. The identification badge system according to claim 1, wherein the readiness indicator is provided on the reusable badge.
20. The identification badge system according claim 1, wherein the readiness indicator is provided on the base station.

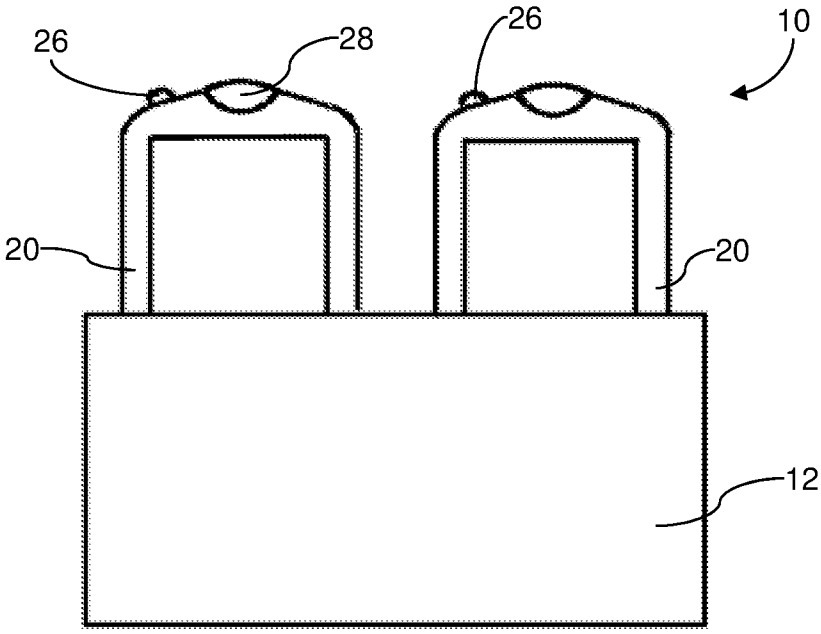

FIG. 1

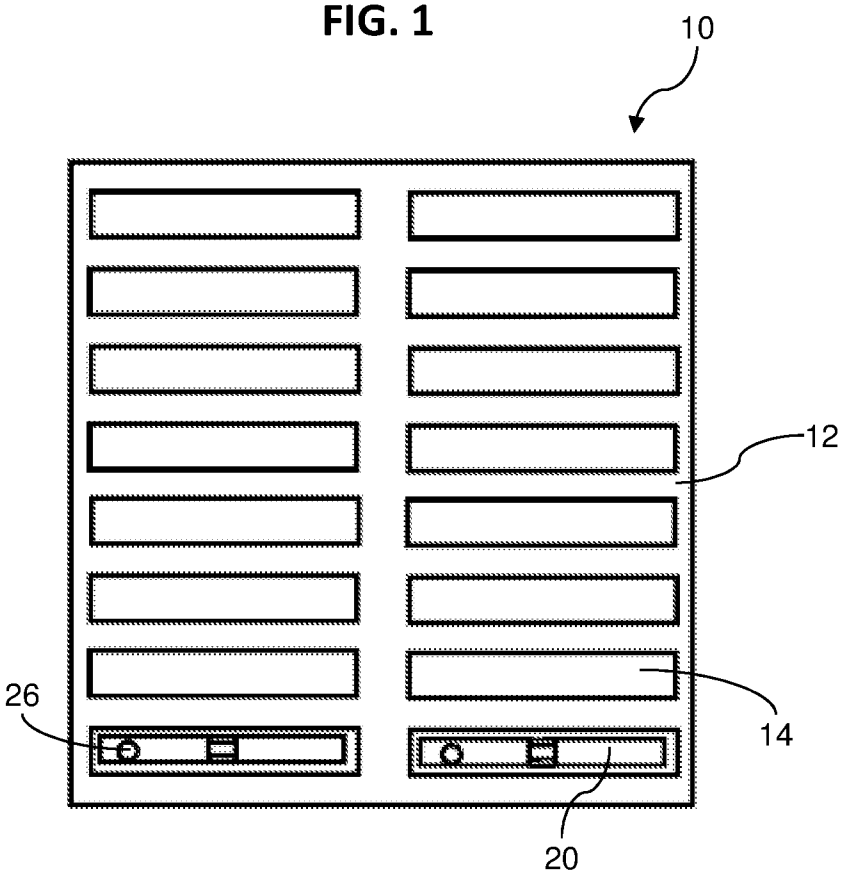

FIG. 2

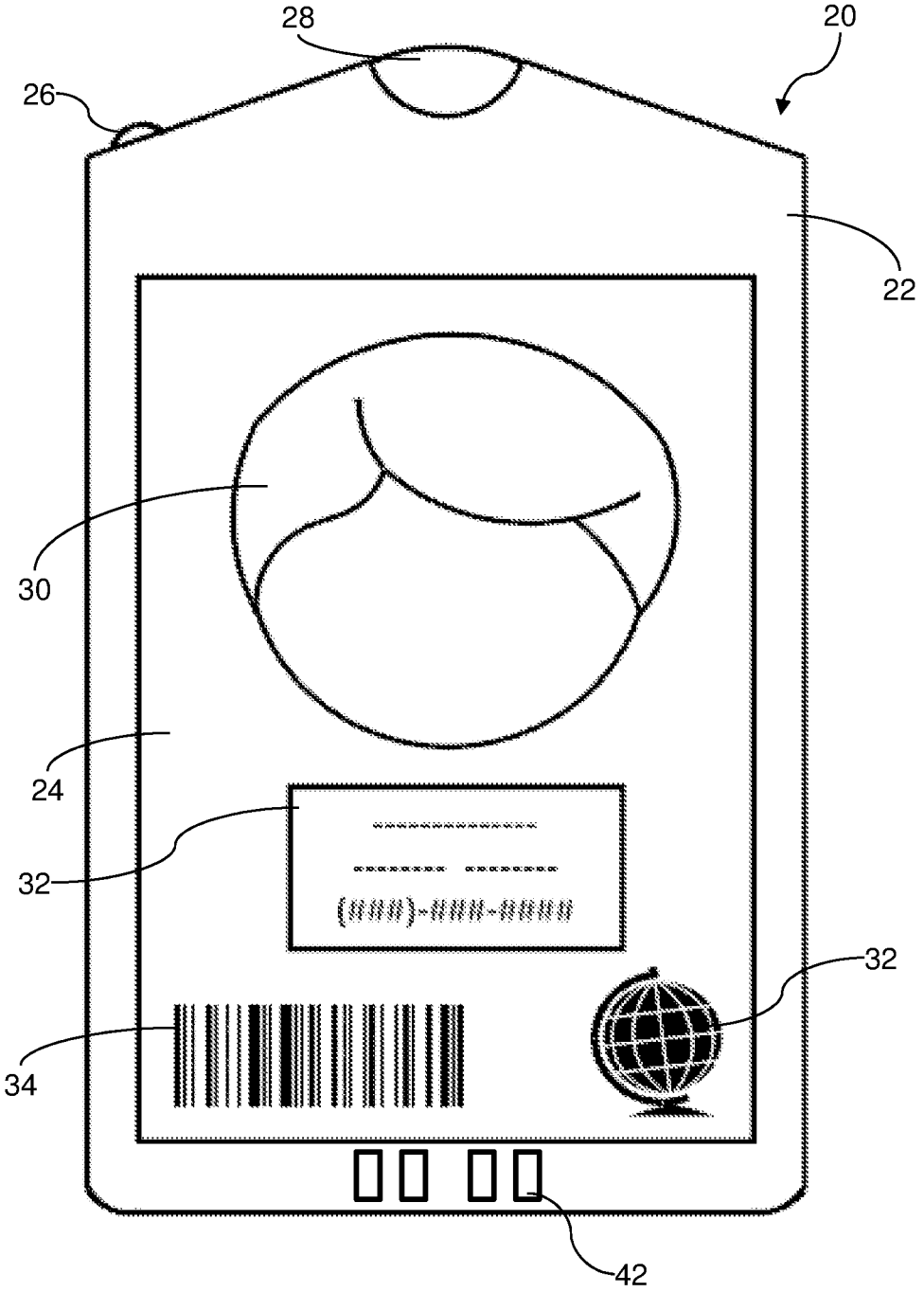

FIG. 3

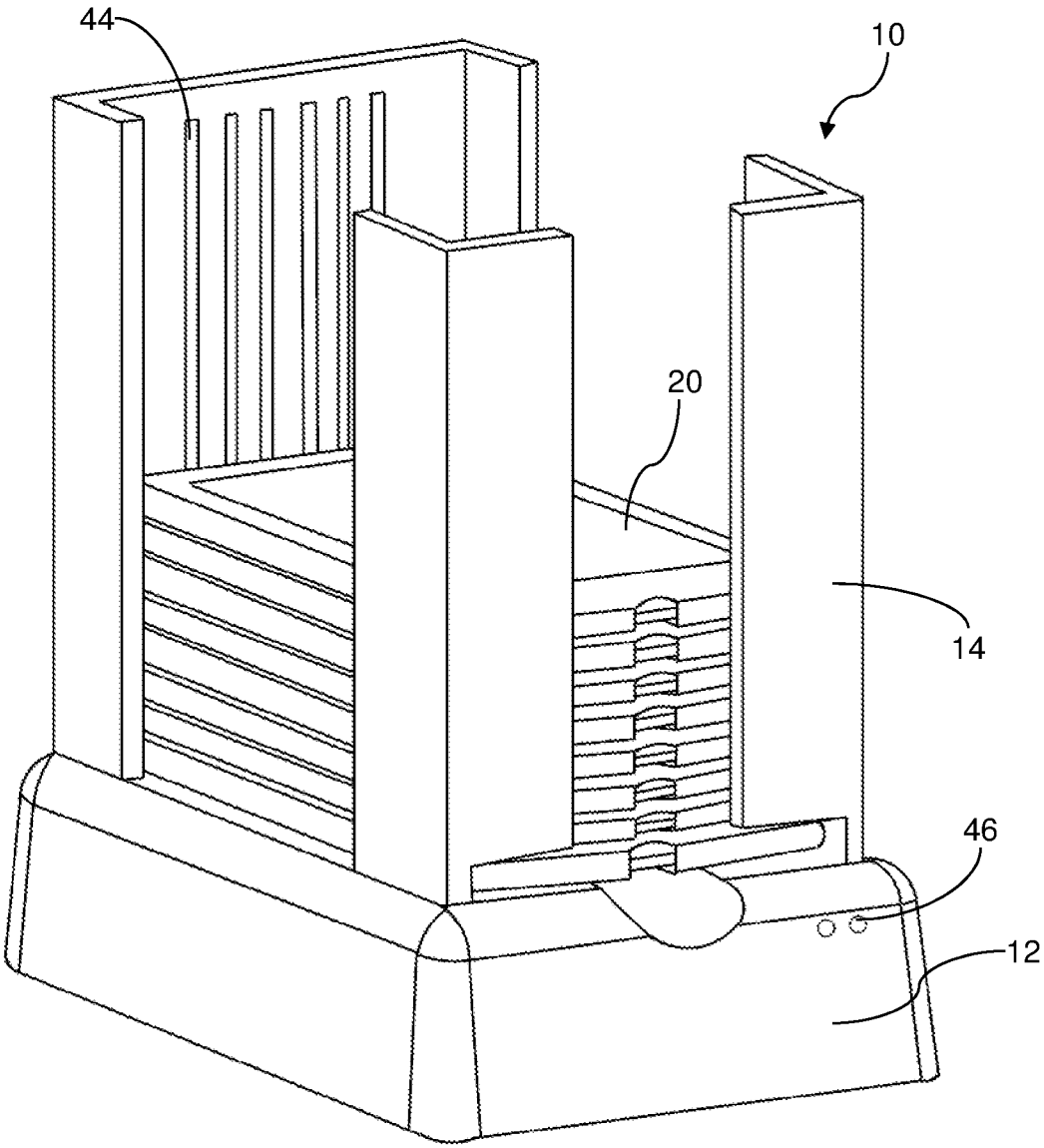

FIG. 4

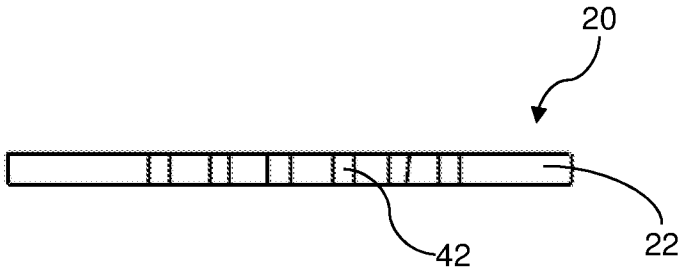

FIG. 5

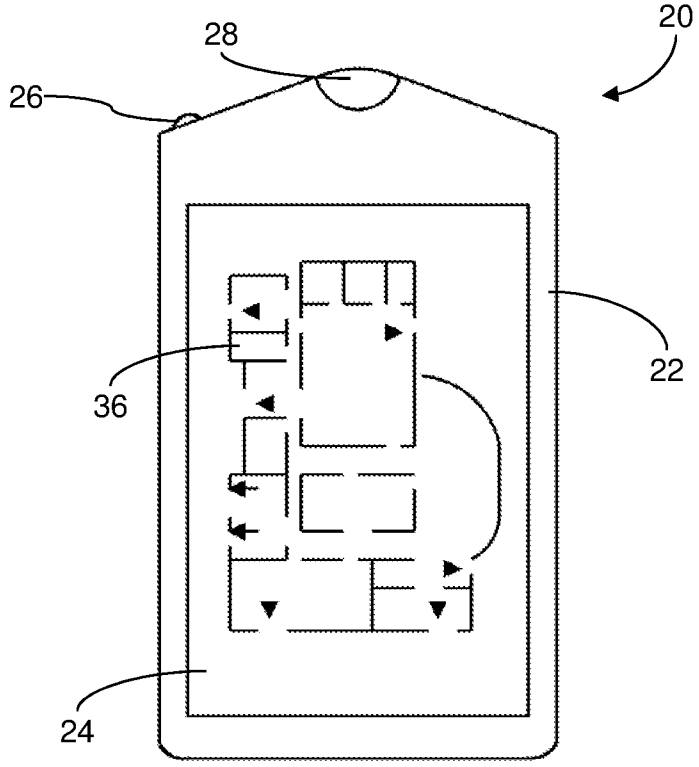
20
28
26
22
36
24

FIG. 6A

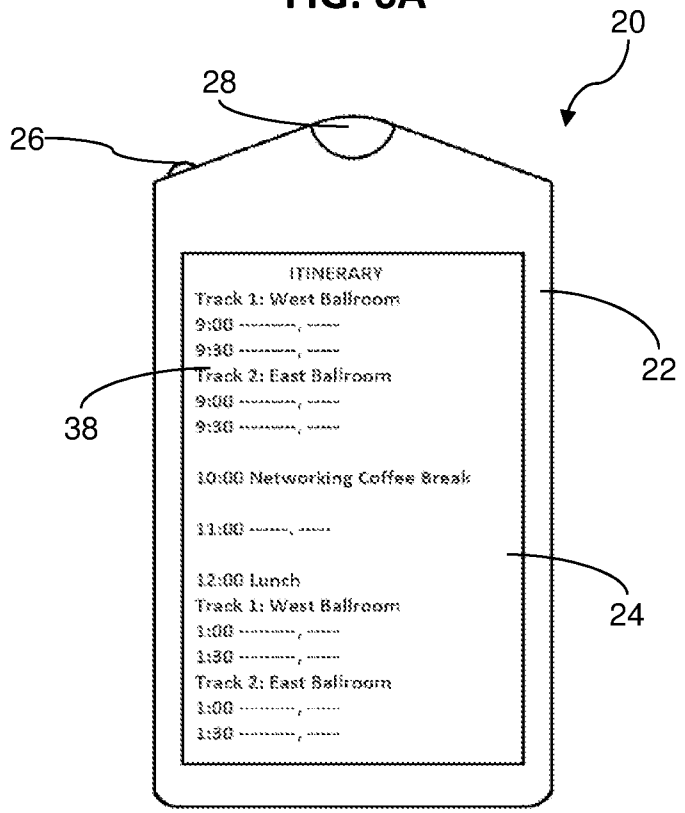
20
28
26
ITINERARY
Track 1: West Ballroom
9:00 ---------, -----
9:30 ---------, -----
Track 2: East Ballroom
9:00 ---------, -----
9:30 ---------, -----
10:00 Networking Coffee Break
11:00 -----, -----
12:00 Lunch
Track 1: West Ballroom
1:00 ---------, -----
1:30 ---------, -----
Track 2: East Ballroom
1:00 ---------, -----
1:30 ---------, -----
22
38
24

FIG. 6B

INTERNATIONAL SEARCH REPORT

International application No
PCT/US2017/033699

A. CLASSIFICATION OF SUBJECT MATTER
INV. G07C9/00
ADD.

According to International Patent Classification (IPC) or to both national classification and IPC

B. FIELDS SEARCHED

Minimum documentation searched (classification system followed by classification symbols)
G07C G08B G06F G06K H04B H04M

Documentation searched other than minimum documentation to the extent that such documents are included in the fields searched

Electronic data base consulted during the international search (name of data base and, where practicable, search terms used)

EPO-Internal , WPI Data

C. DOCUMENTS CONSIDERED TO BE RELEVANT

Category*	Citation of document, with indication, where appropriate, of the relevant passages	Relevant to claim No.
A	US 2016/379426 Al (THOLEN LAURA W [US] ET AL) 29 December 2016 (2016-12-29) abstract paragraph [0002] - paragraph [0015] paragraph [0029] - paragraph [0079] figures 1-8 -----	1-20
A	US 2004/091659 Al (BANKS DONALD E [US] ET AL) 13 May 2004 (2004-05-13) abstract paragraph [0016] - paragraph [0023] paragraph [0094] - paragraph [0128] figures 1-53 -----	1-20

-/- ·

[X] Further documents are listed in the continuation of Box C.

[X] See patent family annex.

* Special categories of cited documents :

"A" document defining the general state of the art which is not considered to be of particular relevance

"E" earlier application or patent but published on or after the international filing date

"L" documentwhich may throw doubts on priority claim(s) orwhich is cited to establish the publication date of another citation or other special reason (as specified)

"O" document referring to an oral disclosure, use, exhibition or other means

"P" document published prior to the international filing date but later than the priority date claimed

"T" later document published after the international filing date or priority date and not in conflict with the application but cited to understand the principle or theory underlying the invention

"X" document of particular relevance; the claimed invention cannot be considered novel or cannot be considered to involve an inventive step when the document is taken alone

"Y" document of particular relevance; the claimed invention cannot be considered to involve an inventive step when the document is combined with one or more other such documents, such combination being obvious to a person skilled in the art

"&" document member of the same patent family

Date of the actual completion of the international search	Date of mailing of the international search report
30 October 2017	09/11/2017

Name and mailing address of the ISA/	Authorized officer
European Patent Office, P.B. 5818 Patentlaan 2 NL - 2280 HV Rijswijk Tel. (+31-70) 340-2040, Fax: (+31-70) 340-3016	Pafieda Fernandez , J

3

Form PCT/ISA/210 (second sheet) (April 2005)

INTERNATIONAL SEARCH REPORT

International application No
PCT/US2017/033699

C(Continuation). DOCUMENTS CONSIDERED TO BE RELEVANT

Category*	Citation of document, with indication, where appropriate, of the relevant passages	Relevant to claim No.
A	US 2013/215275 Al (BERINI DARIO JOHN [US] ET AL) 22 August 2013 (2013-08-22) abstract figures 1-10 paragraph [0070] - paragraph [0089] -----	1-20
A	US 2012/023422 Al (BITON PHILIPPE [FR] ET AL) 26 January 2012 (2012-01-26) abstract paragraph [0007] - paragraph [0111] figures 1-4 -----	1-20
A	US 5 364 132 A (HAAS DAVID J [US] ET AL) 15 November 1994 (1994-11-15) abstract column 2, line 65 - column 3, line 52 -----	1-20

3

INTERNATIONAL SEARCH REPORT

Information on patent family members

International application No
PCT/US2017/033699

Patent document cited in search report	Publication date	Patent family member(s)	Publication date
US 2016379426 A1	29-12-2016	NONE	
US 2004091659 A1	13-05-2004	AU 2003267136 A1	23-04-2004
		AU 2003278825 A1	30-04-2004
		CA 2498071 A1	15-04-2004
		CA 2499256 A1	25-03-2004
		EP 1546882 A1	29-06-2005
		EP 1546986 A2	29-06-2005
		JP 2005538880 A	22-12-2005
		JP 2006516050 A	15-06-2006
		MX PA05002889 A	22-06-2005
		MX PA05002941 A	17-06-2005
		NZ 539336 A	31-03-2006
		US 2004091659 A1	13-05-2004
		US 2009092804 A1	09-04-2009
		WO 2004025473 A1	25-03-2004
		WO 2004032023 A2	15-04-2004
US 2013215275 A1	22-08-2013	US 2013215275 A1	22-08-2013
		US 2016110533 A1	21-04-2016
US 2012023422 A1	26-01-2012	EP 2194490 A1	09-06-2010
		EP 2370936 A1	05-10-2011
		US 2012023422 A1	26-01-2012
		WO 2010060986 A1	03-06-2010
US 5364132 A	15-11-1994	AT 153603 T	15-06-1997
		AU 659138 B2	11-05-1995
		CA 2104480 A1	05-08-1992
		DE 69220040 D1	03-07-1997
		DE 69220040 T2	18-09-1997
		EP 0570495 A1	24-11-1993
		ES 2103933 T3	01-10-1997
		US 5364132 A	15-11-1994
		WO 9213724 A1	20-08-1992