June 26, 1956 R. W. BACHI ET AL 2,752,189

ELECTROMAGNETICALLY OPERATED LATCH MECHANISM

Filed Feb. 11, 1952

4 Sheets-Sheet 1

Fig. 1.

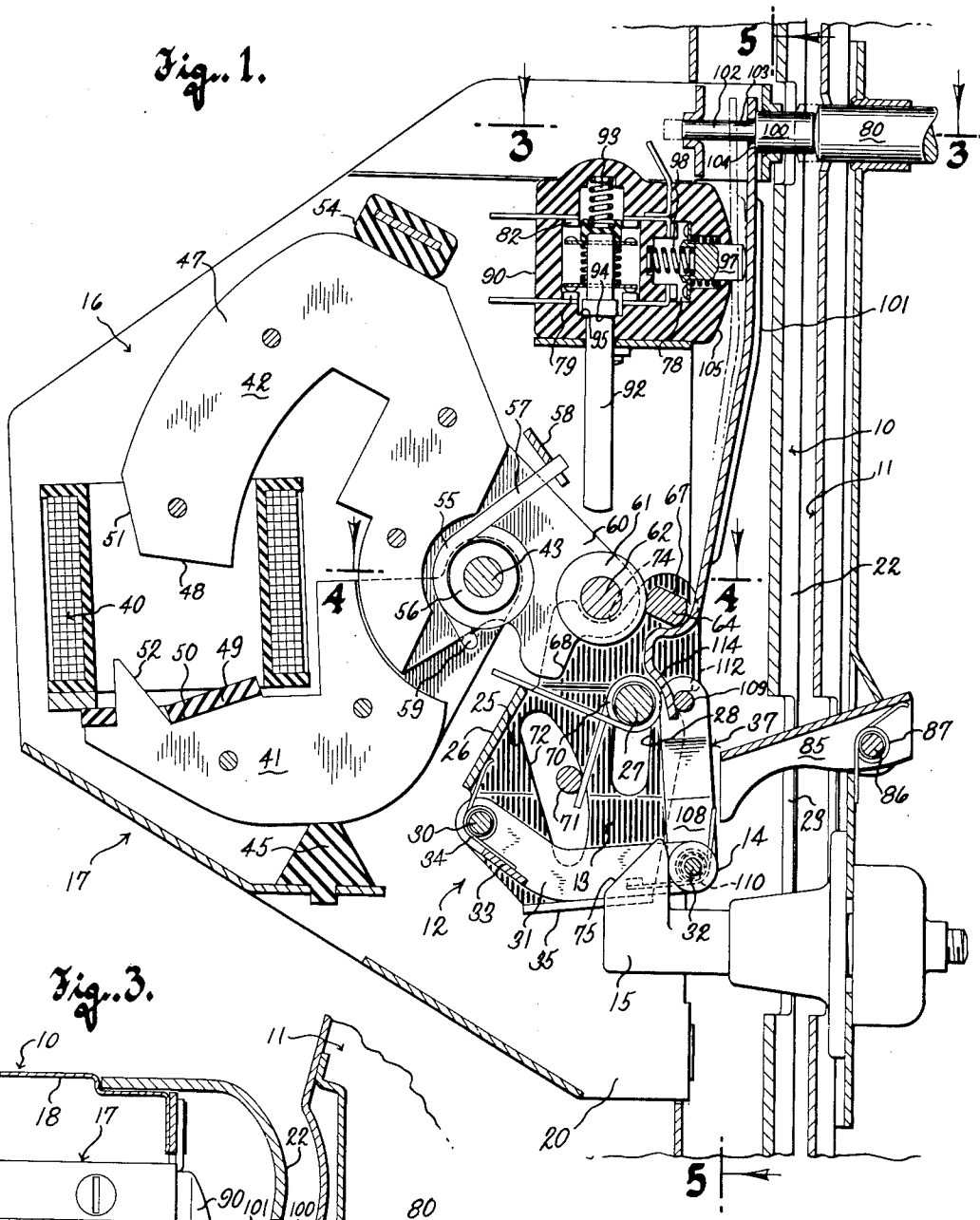

Fig. 3.

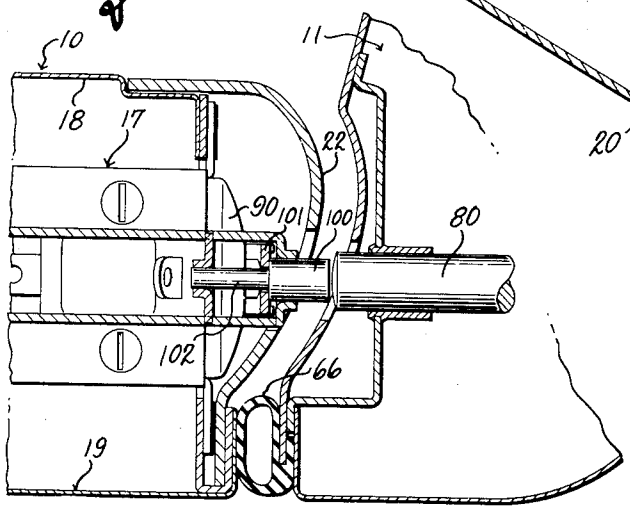

Inventors
Robert W. Bachi
Hardin Y. Fisher
By Ira Milton Jones
Attorney

June 26, 1956 R. W. BACHI ET AL 2,752,189

ELECTROMAGNETICALLY OPERATED LATCH MECHANISM

Filed Feb. 11, 1952 4 Sheets-Sheet 2

Fig. 2.

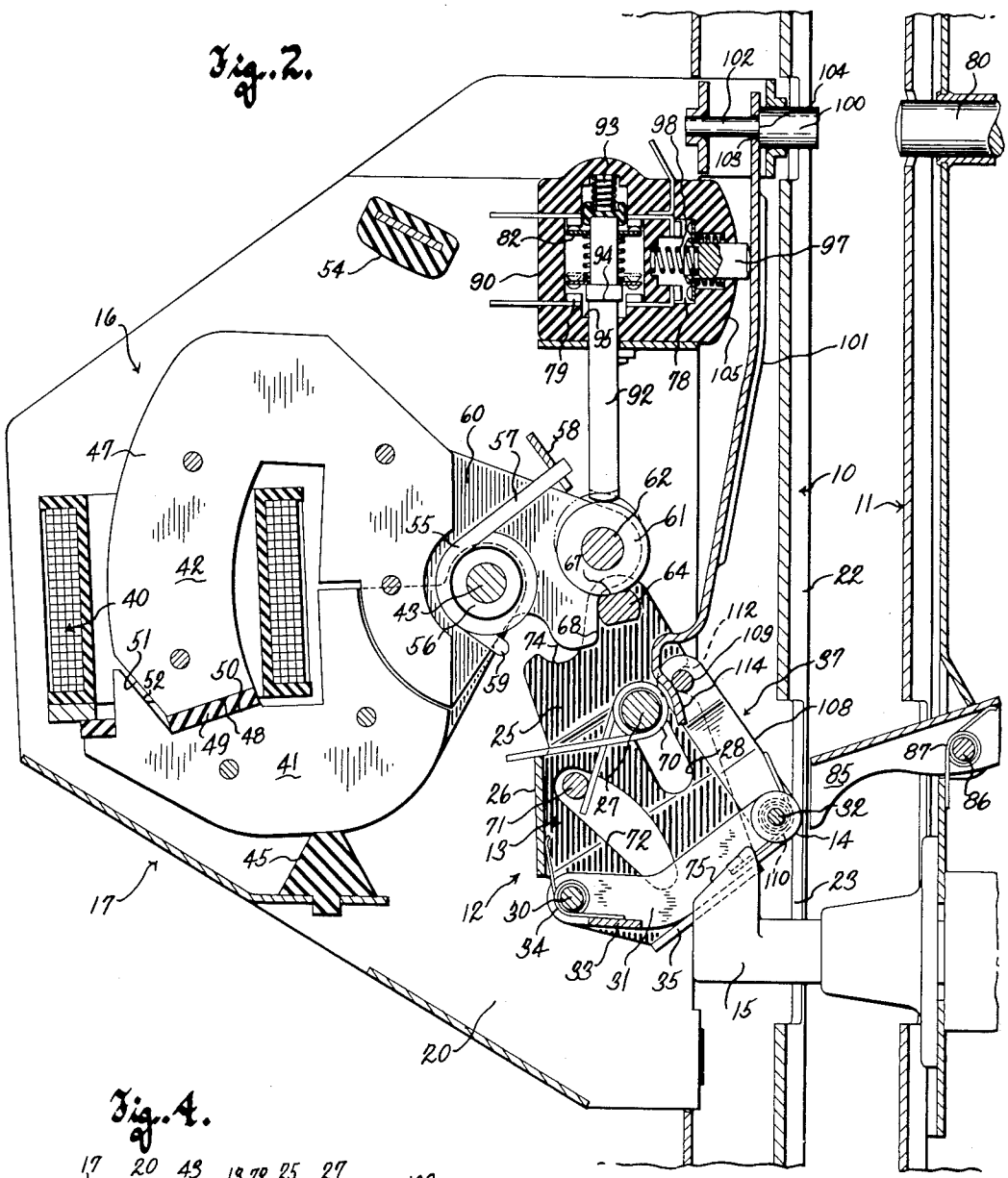

Fig. 4.

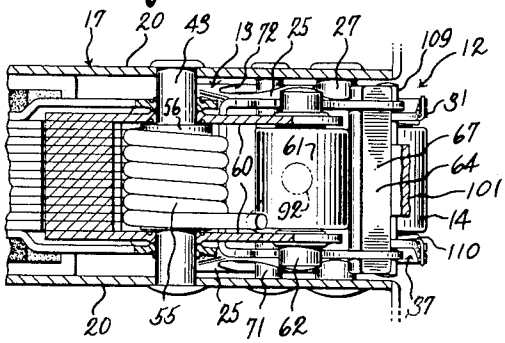

Inventors
Robert W. Bachi
Hardin Y. Fisher
By Dearborn Jones
Attorneys

June 26, 1956 R. W. BACHI ET AL 2,752,189

ELECTROMAGNETICALLY OPERATED LATCH MECHANISM

Filed Feb. 11, 1952

4 Sheets-Sheet 3

Fig. 5.

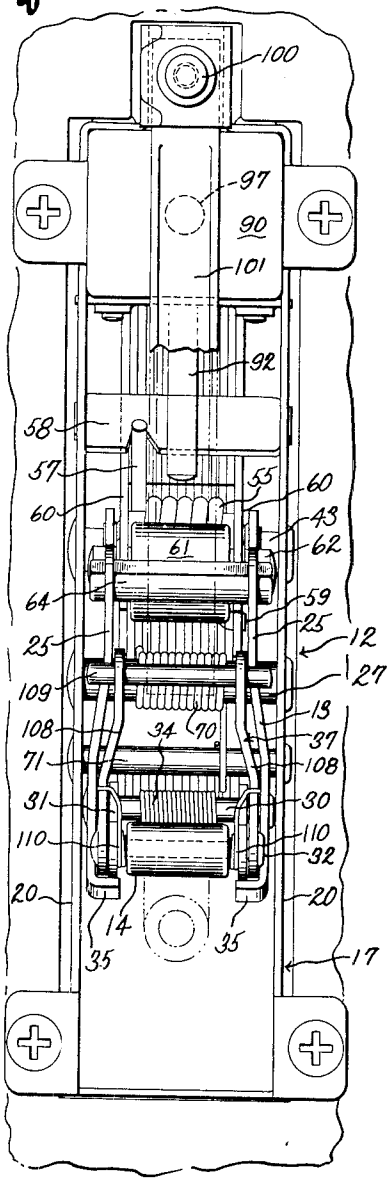

Fig. 6.

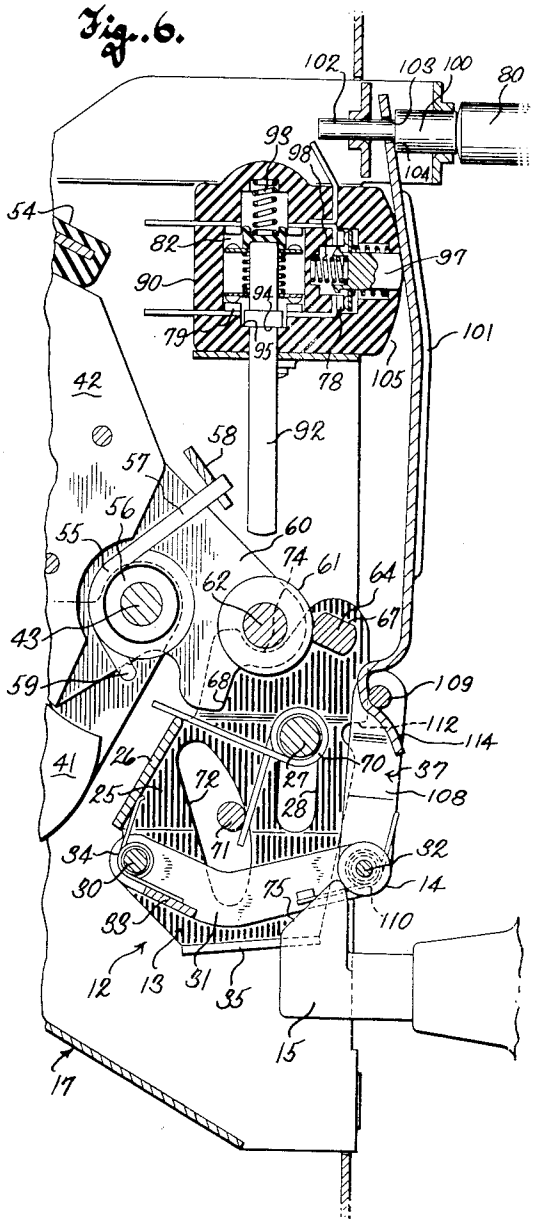

Fig. 7.

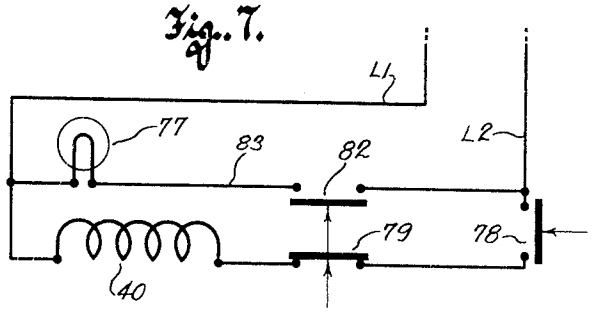

Inventors
Robert W. Bachi
Hardin Y. Fisher
By Dearmitton Jones
Attorneys

June 26, 1956 R. W. BACHI ET AL 2,752,189

ELECTROMAGNETICALLY OPERATED LATCH MECHANISM

Filed Feb. 11, 1952 4 Sheets-Sheet 4

Fig. 9.

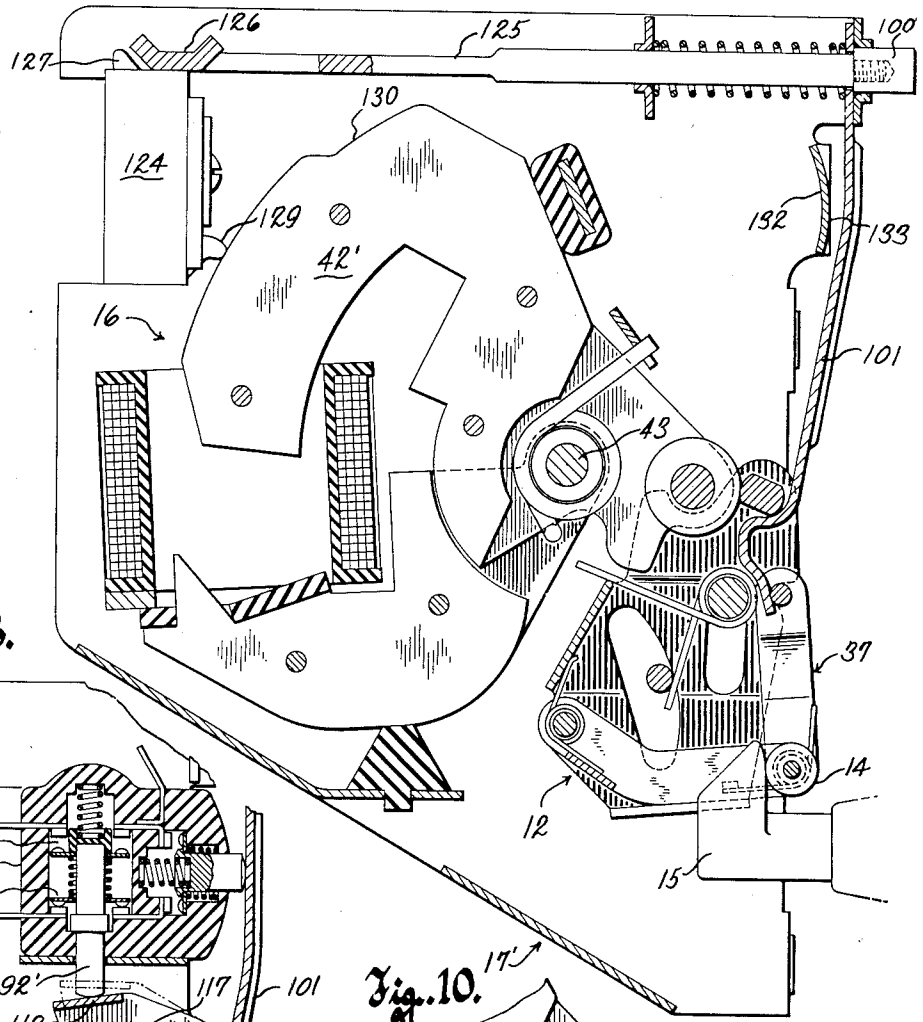

Fig. 8.

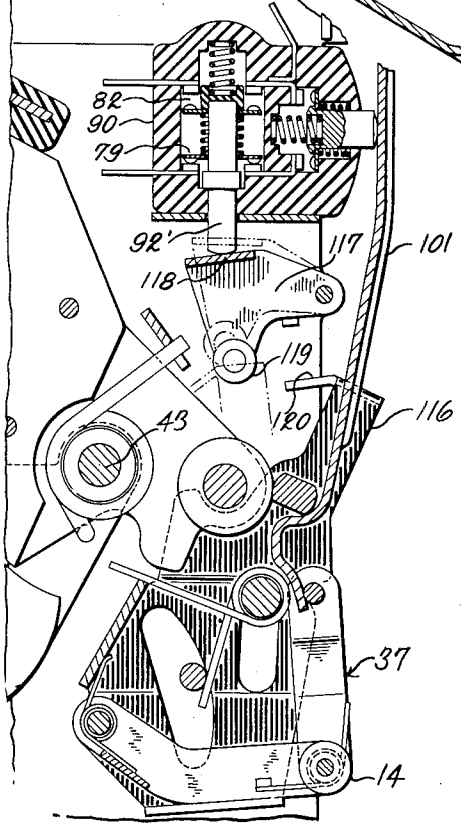

Fig. 10.

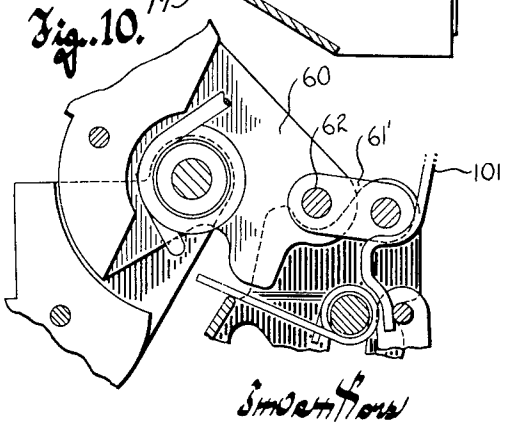

Simon Sons
Robert W. Bachi
Hardin Y. Fisher
By Dearmitt & Jones
Attorneys

United States Patent Office 2,752,189 Patented June 26, 1956

2,752,189

ELECTROMAGNETICALLY OPERATED LATCH MECHANISM

Robert W. Bachi, Itasca, and Hardin Y. Fisher, Hillside, Ill., assignors, by mesne assignments, to Soreng Products Corporation, a corporation of Delaware

Application February 11, 1952, Serial No. 270,924

26 Claims. (Cl. 292—336)

This invention relates generally to latch mechanisms and refers more particularly to a latch mechanism which is especially suited for electromagnetic operation.

It is the general purpose of this invention to provide an improved door latch mechanism which can be operated either electromagnetically or manually in the event of power failure, and featuring a latch bolt which can be released manually by relatively simple means entirely independently of the means for releasing the latch electromagnetically.

Another purpose of this invention resides in the provision of an electromagnetically operated door latch mechanism incorporating a latching element and a relatively strong spring acting on the latching element to hold the same engaged with its keeper under a force great enough to tightly draw the door closed, and wherein motion of the core means for the electromagnet in response to energization thereof is utilized to retract the latching element and load the spring and to cause cooperating parts on relatively movable members of the latch mechanism to be brought into interengaging relationship with one another to releasably hold the spring loaded and the latching element in an inoperative keeper releasing position, out of which it must be tripped for movement to its keeper engaging position by means independent of the electromagnetic actuator.

It is another purpose of this invention to provide an electromagnetically operated latch of the character described featuring an energizing circuit for the electromagnet including both a normally open switch adapted to be closed manually to complete the energizing circuit for the electromagnet, and a normally closed switch arranged to be opened automatically upon release of the latch to effect deenergization of the electromagnet.

Still another purpose of this invention is to provide a latch mechanism of the character described which is admirably suited for use in refrigerators, and wherein the interior light of the refrigerator is automatically energized in consequence of electromagnetic actuation of the latch to the keeper releasing position.

With the above and other objects in view, which will appear as the description proceeds, this invention resides in the novel construction and arrangement of parts substantially as hereinafter described, and more particularly defined by the appended claims, it being understood that such changes in the precise embodiment of the hereinafter disclosed invention may be made as come within the scope of the claims.

The accompanying drawings illustrate several complete examples of the physical embodiment of the invention constructed in accordance with the best modes so far devised for the practical application of the principles thereof, and in which:

Figure 1 is a view partly in side elevation and partly in vertical section showing the latch mechanism of this invention embodied in a refrigerator, and illustrating the latch bolt in an operative keeper engaging position;

Figure 2 is a view similar to Figure 1 but illustrating the manner in which energization of the electromagnet effects release of the latch bolt from its keeper;

Figure 3 is a fragmentary sectional view taken through Figure 1 along the plane of the line 3—3;

Figure 4 is a fragmentary sectional view taken through Figure 1 along the plane of the line 4—4;

Figure 5 is a front elevational view of the latch mechanism shown in Figure 1 viewed along the line 5—5;

Figure 6 is a fragmentary side elevational view substantially corresponding to Figure 1 but illustrating the manner in which the latch bolt is released from its keeper manually and independently of the electromagnetic actuating means;

Figure 7 is a wiring diagram illustrating the manner in which both the energizing circuits for the electromagnet and the interior light of the refrigerator are controlled;

Figure 8 is a side elevational view similar to Figure 1 but showing a slightly modified embodiment of the invention;

Figure 9 is a side elevational view similar to Figure 1 but showing still another embodiment of the invention; and

Figure 10 is a fragmentary detail sectional view showing a slightly modified manner of establishing the toggle connection between the latch lever and the movable core means of the electromagnet.

Referring now more particularly to the accompanying drawings in which like numerals refer to like parts throughout the several views, the numeral **10** designates one side wall of a refrigerator having a door **11** to close the opening in the front of the refrigerator. The latch mechanism of this invention, generally designated **12**, is preferably mounted in the side wall **10** at the front of the refrigerator, opposite the free upright edge of the refrigerator door **11**, and includes a latching element or lever **13** having a bolt **14** thereon engageable with a hook shaped keeper **15** on the rear of the door. An electromagnet generally designated **16** is provided for operating the latch.

A substantially U-shaped mounting bracket **17** is provided for the latch mechanism and the electromagnet **16**, the bracket being fixed on the side wall **10** between the inner and outer side panels **18** and **19** thereof, respectively, and having opposite parallel legs **20** embracing the latch mechanism and the electromagnet. As will be brought out more fully hereinafter, the latching element or lever **13** is mounted upon the bracket **17** so as to be positioned adjacent to the front edge **22** of the side wall **10** opposite an opening **23** therein to enable the keeper **15** on the underside of the door to project into the front of the side wall **10** for engagement with the latch bolt **14** carried by the lever.

The latch lever **13** comprises a sheet metal stamping having opposite sides **25** held in spaced apart parallel relationship by a strap **26** integrally joined thereto. A pivot pin **27** having its ends anchored in the legs **20** of the mounting bracket **17** passes through the upper end portions of vertically elongated slots **28** in both sides of the latch lever to mount the lever on the bracket for rocking motion about a horizontal axis.

Though the latch bolt **14** is carried by the latch lever for rocking motion therewith about the axis of the pivot **27**, it is nevertheless mounted on the latch lever for pivotal motion with respect thereto about the axis of a pivot pin **30**. This pin has its opposite ends anchored in the sides **25** of the latch lever and is disposed with its axis parallel to but rearwardly and below the axis of the pivot pin **27** for the lever. The rear ends of a pair of opposite arms **31** are pivotally received on the pin **30** and these arms project forwardly toward the front edge of the side

wall to have the roller 14 which comprises the bolt confined between their forward ends and rotatably journaled upon a pin 32 connecting the front ends of the arms. The arms 31, of course, are rigidly joined together as by a cross member 33 connecting the lower edges of the arms adjacent to the pivot pin 30.

A torsion spring 34 coiled about the pivot pin 30 and having its ends reacting between the latch lever and the arms supporting the latch bolt yieldingly urges the latch bolt downwardly toward a normal position with respect to the lever defined by the engagement of the bottom edges of the arms 31 with inturned flanges 35 on the lower edges of the sides 25 of the latch lever. The pivotally mounted latch bolt is normally held in this position, against motion relative to the latch lever, by a manually releasable latching device 37 to be described at greater length hereinafter.

From the description thus far it will be noted that the latching element or lever 13 is mounted for pivotal motion about the horizontal axis of its pivot pin 27 for clockwise rocking motion to carry the latch bolt 14 to an operative keeper engaging position such as seen in Figure 1, and for counterclockwise rocking motion to carry the latch bolt to an inoperative keeper released position such as seen in Figure 2.

The electromagnet is mounted on the bracket 17 rearwardly of the latch lever, and includes a coil 40 fixed to the bracket, and a core comprising a substantially stationary core element 41 and a movable core element 42. Both core elements may be conveniently supported on a common pin 43 having its opposite ends anchored in the legs 20 of the mounting bracket so that the axis of the pin is parallel to that of the lever pivot 27 but is spaced a distance rearwardly and slightly upwardly thereof.

The coil 40 is disposed with its hollow center on a substantially vertical axis, and the lower or substantially stationary core element 41 extends rearwardly from its supporting pin 43 to lie directly adjacent to the lower end of the coil. The core element 41 is yieldingly supported in this position by a rubber pad 45 carried by the bight of the bracket 17. The upper or movable core element 42 is pivotally supported by the pin 43 for rocking motion in a counterclockwise direction in response to energization of the coil 40, to carry an arcuate armature portion 47 thereon into the interior of the coil from the upper end thereof toward engagement with the portion of the stationary core element overlying the underside of the coil.

Response of the pivotally mounted core element 42 to energization of the electromagnet is cushioned by the engagement of the pole face 48 on the upper core element with a rubber cushioning pad 49 resting upon the pole face 50 of the core element 41; and it will be noted also that the impact of seating of the upper core element upon the lower core element is partly borne by the rubber bumper 45 on the mounting bracket.

If desired, the pole pieces of the core elements may have cooperating tapered surfaces 51 and 52 thereon which pass closely adjacent to one another during seating of the upper core member in response to energization of the electromagnet, to improve the traction characteristics thereof. The surface 51 on the movable core element 42 may be defined by a cut-off portion at the outer corner of its pole piece, while the surface 52 on the lower core element may comprise an inward extension thereof projecting into the hollow interior of the coil and tapering to "mesh" with the inclined surface 51 during seating of the movable core element.

The movable core element 42 is yieldingly biased to a retracted position such as seen in Figure 1 defined by its engagement with a rubber bumper 54 carried by the mounting bracket. For this purpose a relatively strong torsion spring 55 is coiled about the bushing 56 by which the movable core element is pivotally mounted upon the pivot pin 43, and the spring has one end 57 reacting against an abutment 58 on the mounting bracket and its opposite end 59 reacting against the movable core element 42 to exert a substantial force thereon tending to hold the same swung in a clockwise direction and engaged with the bumper 54.

The movable core element 42 also has identical arms 60 thereon formed as extensions of the outer laminae thereof. These arms project forwardly of the pivot pin 43 and have a camming roller 61 received between their forward extremities, the roller 61 being freely rotatably mounted upon a cross pin 62 having its opposite ends anchored in the front ends of the arms.

The roller pin 62 is disposed with its axis parallel to those of the pivot pins 27 and 43, and mounts the camming roller 61 nearly directly over the pivot pin 27; so that the roller is carried away from the lever pivot during response of the movable core element to energization of the electromagnet, and toward the lever pivot under the influence of the strong torsion spring 55 following de-energization of the electromagnet.

The arms 60 on the movable core element 42 together with the arm of the lever 13 extending upwardly from its pivot 27 may be considered as toggle linkage, now about to be described, and which linkage has the effect of making the movable core element 42 a part of the latch mechanism per se. This toggle linkage has interengaging parts thereon, one of which comprises the camming roller 61, and the other of which comprises an abutment 64 on the latch lever spaced a distance above the lever pivot and provided by a pin having its opposite ends anchored in the sides 25 of the latch lever to occupy a position with its axis parallel to those of the pivot pin 27 and the roller pin 62. In the keeper engaging position of the bolt seen in Figure 1, the abutment 64 is engaged with the front of the caming roller 61, substantially on a line with the axis of the roller and that of the pivot 43 for the movable core element 42, and the camming roller thus blocks counterclockwise rocking of the latch lever and bolt to the keeper released position.

In this position of the latch lever, therefore, the force of the strong torsion spring 55 which is utilized to hold the movable core element 42 in its retracted position holds the camming roller 61 against the rear side of the abutment 64 to maintain the latch lever 13 cammed in the clockwise direction about its pivot and in its operative keeper engaging position. It will also be noted that in this position of the components of the latch, the strong torsion spring 55 is utilized to exert a rearward force on the keeper 15, by the latch bolt 14, tending to draw the door 11 toward the front of the refrigerator to hold the seal 66 confined therebetween under a degree of compression.

During response of the movable core element 42 to energization of the electromagnet, the core element 42 swings in a counterclockwise direction about its pivot 43 to carry the camming roller 61 upwardly to the position seen in Figure 2, out of its former position interposed between the core element pivot 43 and the abutment 64 on the latch lever, to free the lever for counterclockwise rocking motion to the keeper releasing position shown in Figure 2 and to load the strong torsion spring 55. In this keeper releasing or inoperative position of the latching element, the parts 61 and 64 are interengaged in such a manner that the abutment 64 is interposed between the camming roller 61 and the pivot 27 for the latch lever, and a flat 67 on the upper side of the abutment is engaged with the underside of the camming roller to block clockwise retracting motion of the movable core element 42 and to releasably hold the latching element 13 in a cocked keeper releasing position out of which it must be tripped for return to its operative keeper engaging position by means independent of the electromagnetic actuator.

This cocked position of the latching element is defined

by engagement of the abutment **64** with a shoulder **68** on each arm **60**, beneath the camming roller, the shoulder being so located that the tangential line of engagement between the roller **61** and the flat on the abutment **64** is disposed slightly rearwardly of the line joining the axes of the camming roller and the pivot **27** for the latch lever.

Any suitable means may be provided to impart counterclockwise rocking or cocking movement to the latch lever upon motion of the camming roller upwardly from behind the abutment **64** on the latch lever, such as linkage or the like connecting the movable core element **42** with the latch lever. An extremely simple manner of effecting such counterclockwise rocking motion of the latch lever to the inoperative or cocked position resides in the provision of a torsion spring **70** coiled about the latch lever pivot **27** with one end of the spring bearing against a cross pin **71** extending between and having its opposite ends anchored to the legs **20** of the mounting bracket, and passing through an elongated slot **72** in the opposite sides of the latch lever. The opposite end of the torsion spring **70** is extended rearwardly to bear on the upper edge of the strap **26** connecting the opposite sides of the latch lever so that the latter is biased to rock in a counterclockwise direction about its pivot whenever the camming roller **61** is lifted from behind the abutment **64**.

It should be noted, however, that the torsion spring **70** is relatively light and exerts a force on the latch lever, tending to rock the same in a counterclockwise direction, of substantially less magnitude than that exerted on the latch lever by the heavy torsion spring **55** through the camming roller **61**.

While the keeper released or cocked position of the latch is defined by the engagement of the abutment **64** thereon with the shoulders **68** on the arms of the movable core element **42**, the tripped or keeper engaging position of the latch is substantially that at which the latch lever has been cammed the maximum distance by the camming roller **61**. Consequently, in the tripped position of the latching element the camming roller is substantially directly interposed between and on a line with the abutment **64** and the pivot **43**. Downward over-travel of the arms **60** to carry the camming roller farther toward the lever pivot **27**, under the influence of the torsion spring **55**, is limited by engagement of the movable core element **42** with its stop **54**.

Attention is directed to the fact that, in the tripped or keeper engaging position of the latch lever, the projecting ends of the camming roller pin **62** are received in notches **74** in the upper edges of the sides **25** of the latch lever just rearwardly of the abutment **64**, but are normally held from contacting the bottom of these notches by the rubber stop **54** for the movable core element. However, in the event the latching element is accidentally tripped while the refrigerator door is open, so that upon subsequent closure of the door the latch lever must be moved bodily upwardly to allow the keeper **15** to engage behind the latch bolt, the ends of the pins **62** are engaged by the bottoms of the notches **74** upon initial upward motion of the lever. Such necessary upward displacement of the latch lever is permitted by the slots **28** and **72** in the lever sides, and is imparted thereto by the inclined cam surface **75** on the rear of the pointed upper end of the keeper **15** during final closing motion of the door. By virtue of the engagement of the ends of the pin with the bottoms of the notches **74** continued upward displacement of the latch lever by the keeper rocks the movable core element **42** against the force of the strong torsion spring **55**. As a result, this spring snaps the latch lever downwardly to engage the bolt roller ahead of the keeper as soon as the latter has passed beneath the bolt.

The energizing circuit for the electromagnet is best illustrated in Figure 7 showing a wiring diagram thereof including the circuit for the interior light **77** for the refrigerator. As here shown the power lines **L1** and **L2** are connected to the opposite ends of the coil **40** of the electromagnet through two switches **78** and **79** in series with one another in the line **L2**. The switch **78** is normally open and is adapted to be closed manually by depression of an actuator **80** on the door of the refrigerator accessible from the exterior thereof. The switch **79** is normally closed so that manual closure of the switch **78** effects energization of the coil **40** of the electromagnet and attraction of the core element **42** to its seated position, against the force of the toggle spring **55**.

As explained hereinbefore such energization of the electromagnet and response of the core element **42** effects cocking of the latching element and release of the latch bolt **14** from its keeper **15**, freeing the door for opening. Concomitantly with seating of the core element **42**, however, the normally closed switch **79** in the energizing circuit for the electromagnet is opened to break the same, and this switch is held open as long as the latching element remains in its cocked position. Consequently, the electromagnet is energized for only the brief period of time necessary to effect release of the latch bolt from its keeper and engagement of the abutment **64** on the latching element beneath the camming roller **61** on the core element to releasably hold the latching element in its cocked or inoperative position.

The switch **79** is adapted to be opened during seating motion of the core element **42** by a part on the latch mechanism which moves therewith during cocking of the toggle. The structure by which this is accomplished will be explained shortly.

Also simultaneously with opening of the switch **79** to break the energizing circuit for the electromagnet a second normally open switch **82** is closed, preferably but not necessarily by the same means which actuates the switch **79** to open the same. Closure of the switch **82** completes the energizing circuit for the interior light **77** of the refrigerator so that the same will be illuminated as soon as the toggle is cocked to free the refrigerator door for opening. As shown in Figure 7, the light **77** is connected across lines **L1** and **L2** by a conductor **83** having the switch **82** therein.

From this it will be apparent that the electromagnet **16** is energized by momentary depression of the actuator **80** from the exterior of the refrigerator, and that it will be impossible to effect reenergization of the electromagnet once the movable core element thereof has been moved to its seated position to effect full retraction of the latch bolt and cocking of the latching element in its inoperative position by reason of the fact that the switch **79** is held in its open position when the abutment **64** on the latching element is engaged under the camming roller on the core element **42**.

When the refrigerator door is reclosed, the latching element is tripped out of its cocked position by a trip finger **85** which, in the present case, is separate from the keeper **15** and mounted on the door **11** a slight distance above the keeper. Because of its proximity to the latch bolt **14** when the door is closed, the trip finger is preferably mounted on a pivot pin **86** for upward swinging motion thereon in case it is struck by the bolt during keeper releasing motion thereof. However, the trip finger is yieldingly biased downwardly to an operative position by a relatively light torsion spring **87** coiled about the pivot pin **86** and reacting between the door and a portion of the trip finger forwardly of the pin.

As the door approaches its closed position, therefore, the front of the trip finger **85** collides with the raised bolt roller **14** and imparts initial clockwise rocking motion to the latch lever about its pivot **27** the distance necessary to carry the abutment **64** on the lever forwardly beyond the dead center line joining the axis of the camming roller and that of the pivot pin **27**. As soon as the latch lever has been rocked a slight distance clockwise in this manner the strong torsion spring **55** acts to cam the lever the remaining distance to its operative position in which the latch bolt engages a head of the hook-shaped keeper.

The switches referred to in the description of the wiring diagram illustrated in Figure 7 may conveniently be contained in a unitary housing 90 of insulating material mounted in a fixed position on the upper front portion of the bracket 17 between the legs thereof, above the latch lever. The switch 78 is contained within the front portion of the housing and the switches 79 and 82 are contained one above the other in the rear portion of the housing and substantially directly over the camming roller 61.

Each of the switches 79 and 82 has a contactor encircling a push rod 92 projecting downwardly out of the housing 90 with its lower end arranged to be engaged and lifted by the camming roller 61 during final seating motion of the core element 42 to cock the latch mechanism. Such lifting of the push rod drives the contactors upwardly to effect opening of the lower normally closed switch 79 and closing of the upper normally open switch 82. A compression spring 93 acting upon the upper end of the push rod 92 yieldingly urges the same downwardly to a normal position defined by cooperating shoulders 94 and 95 on the rod and the housing, respectively, in which the switch 79 is closed and the switch 82 is open.

The switch 78 in the front of the housing is adapted to be closed by rearward depression of a button 97 connecting with the contactor of the switch and projecting forwardly out of the switch housing. A compression spring 98 confined between a portion of the housing and the inner end of the button 97 yieldingly urges the latter forwardly to hold the switch 78 normally open.

Rearward motion is imparted to the button 97 for the switch 78 by manual depression of the actuator 80 from the exterior of the closed refrigerator door. This motion of the actuator is translated into closure of the switch 78 through a cooperating actuator 100 and a lever 101 carried thereby. The actuator 100 is mounted on the upper portion of the mounting bracket 17 for sliding motion on an axis aligning with that of the actuator 80 and projecting forwardly through an opening in the front 22 of the side wall 10. The lever 101 extends vertically across the front of the switch housing ahead of the button 97 and its upper end is supported by the actuator 100 which has a reduced rear end portion 102 passing loosely through a hole 103 in the upper end of the lever.

Consequently the shoulder 104 at the junction of the actuator 100 with its reduced rear portion 102 engages the lever during rearward depression of the actuators 80 and 100 to press the upper end portion of the lever rearwardly against the button 97 of the switch 78 to effect closure of the switch and energization of the electromagnet.

The rearward motion of the lever 101, of course, is yieldingly resisted by the compression spring 98 and is limited by the engagement of the lever with a convex surface 105 on the front of the switch housing 90. Such engagement of the lever with the switch housing also determines the extent the actuators 80 and 100 must be depressed manually to effect energization of the electromagnet and release of the latch mechanism, since further depression of the actuators is resisted, although not actually prevented, by the engagement of the lever with the front of the switch housing.

In fact, continued depression of the actuators is intended to effect manual disengagement of the latch bolt 14 from a head of the keeper 15, and this is accomplished by exerting a substantial inward force on the actuators 80 and 100 sufficient to rock the lever 101 about the fulcrum provided by the convex front of the switch housing to impart forward swinging motion to the lower end of the lever and release of the latch device 37 holding the latch bolt in its normally operative position with respect to the latch lever.

The latching device 37 comprises a pair of links 108 embracing the front ends of the arms 31 and pivotally received on the cross pin 32 of the bolt roller. These links project upwardly and their upper ends are rigidly joined by a cross pin 109. The links are also urged to swing in unison in a counterclockwise direction about the pin 32 by torsion springs 110 coiled about the end portions of the cross pin 32 with their ends connected between the arms 31 and the forward edges of the links 108.

The biasing force thus exerted on the links 108 by the torsion springs 110 is utilized to hold the cross pin 109 connecting the upper ends of the links engaged in forwardly opening notches 112 in the legs 20 of the mounting bracket. Consequently, with the arrangement described the links 108 provide a latch device to hold the latch bolt 14 in its normal position with respect to the latch lever and out of which it is movable, relative to the lever, by disengagement of the cross pin 109 of the links from its notches 112 and lifting of the links to draw the latch bolt upwardly against the bias of the torsion spring acting thereon.

Such disengagement of the cross pin 109 from its notches 112 is effected by the lower end of the lever 101 during forward swinging motion thereof about the fulcrum provided by the convex front of the switch housing. For this purpose the lower portion of the lever has a forwardly facing convex extremity 114 normally held engaged with the rear side of the cross pin 109 by the force of the compression spring 98 for the switch 78, and which kicks the cross pin 109 out of its notches upon initial counterclockwise fulcruming of the lever on the front of the switch housing and thereafter cams the links 108 upwardly to lift the latch bolt from behind the hook-shaped keeper 15.

As seen in Figure 6 such manual release of the latch bolt entails upward swinging motion of the arms 31 which carry the bolt roller 14 against the force of the torsion spring 34 acting thereon, and it will be noted that it is only necessary to raise the bolt roller far enough to dispose its axis slightly above the pointed upper end of the keeper 15 to allow the refrigerator door to be opened by a pull exerted manually thereon.

It is important to note that the mechanism for effecting manual release of the latch bolt operates entirely independently of the electromagnetic means for releasing the bolt, particularly the movable core element 42 of the electromagnet. It is also a feature of this manual bolt release mechanism that as soon as the actuator 80 is released the latch device 37 for the latch bolt is reset automatically. This automatic resetting of the latch device together with return of the latch bolt to its normal position relative to the latch lever upon which it is mounted is effected jointly by the springs 98, 34 and 110; these springs first effecting rocking of the lever 101 clockwise to its position seen in Figure 1, propelling the bolt arms 31 downwardly into engagement with the flanges 35 on the latch lever to return the bolt to its normal position with respect thereto, and aligning the cross pin 109 of the latch device 37 with its notches 112 into which it is then propelled by the torsion springs 110.

The embodiment of the invention illustrated in Figure 8 is substantially the same as that hereinbefore described with the exception that the push rod 92′ by which the switches 79 and 82 are controlled is shorter and is actuated by an extension 116 on the latch lever in cooperation with a pivoted actuator 117 carried by the mounting bracket beneath the switch housing 90. For this purpose the actuating lever has a foot 118 thereon engageable with the lower end of the push rod 92′, and carries a roller 119 in a position to be engaged by a cam surface 120 on the extension 116 of the latch lever during cocking of the latch mechanism so that the final cocking motion of the latching element swings the actuating lever clockwise to open the switch 79 and to close the switch 82.

In the embodiment of the invention illustrated in Figure 9 the switch housing 124 is mounted on the upper rear portion of the mounting bracket 17′ instead of at the front as in the previous embodiments of the invention.

In this case the cabinet carried actuator **100'** has an elongated rearward extension **125** provided with a cam **126** on its rear extremity to engage and actuate a switch lever **127** to effect closure of the switch **78** and energization of the electromagnet upon rearward endwise motion of the actuator **100'**.

The switches **79** and **82** are controlled by a second switch lever **129** extending forwardly out of the switch housing and riding upon the outer convex surface of the armature portion of the movable core element **42'**. Hence, the armature normally holds the switch **79** closed and its companion switch **82** open in the retracted position thereof. Response of the movable core element **42'** to energization of the electromagnet, however, carries the curved armature downwardly into the hollow center of the coil to its seated position, releasing and cocking the latch mechanism. As the armature reaches its seated position, the lever **129** drops into a depression **130** on the armature to cause opening of the switch **79** and deenergization of the electromagnet, and closure of the switch **82** to complete the energizing circuit for the interior light of the refrigerator.

Also in this embodiment of the invention, a transverse fulcrum member **132** is provided on the bracket, connecting the legs thereof; with an outer convex surface **133** thereon to take the place of the convex front of the switch housing in the previous embodiment of the invention.

In the embodiment of the invention illustrated in Figure 10, the movable core element is connected with the latch lever by a pair of links **61'** rather than the camming roller **61** and abutment **64**. These links have their opposite ends pivotally received on the pin **62** formerly provided for the camming roller, and the pin formerly providing the abutment **64** on the latch lever; and the links are preferably located adjacent to the inner surfaces of the arms **60** of the movable core element to clear the lower end of the manual release lever **101**. The toggle thus provided by the links **61'**, however, results in operation of the latch mechanism in the same manner as described hereinbefore.

From the foregoing description taken together with the accompanying drawings, it will be readily apparent that this invention provides an exceptionally reliable electromagnetically operated door latch mechanism, the components of which are connected together toggle fashion with one of said components comprising a portion of the movable core element of the electromagnet itself; and that the energizing circuit for the electromagnet is automatically broken by a part of the latch itself in consequence of release and cocking of the latching element.

What we claim as our invention is:

1. In a latch of the character described: a latch lever having a keeper engaging latch bolt thereon; pivot means mounting the lever for rocking motion between defined keeper engaging and releasing positions; an electromagnet having a movable core element spring biased to move in one direction but movable in the opposite direction against the bias thereon in response to energization of the electromagnet; a cam on the core element movable therewith toward and away from the latch lever pivot, response of the core element to energization of the electromagnet moving the cam away from the latch lever pivot; an abutment on the latch lever, spaced from the pivot thereof, and movable with the lever upon rocking thereof to its keeper releasing position into the path of movement of said cam to block spring biased retracting movement of the core element, said abutment being carried out of the path of said cam by rocking of the latch lever toward its keeper engaging position to free the core element for spring propelled motion to a retracted position in which the cam engages the lever abutment to block rocking motion of the latch lever out of its keeper engaging position, said cam acting upon the abutment during rocking of the latch lever out of its keeper releasing position to propel the lever to its keeper engaging position under the force of the spring bias acting upon the core element; and means rendered effective upon response of the core element to energization of the electromagnet for rocking the latch lever to its keeper releasing position.

2. The latch set forth in claim 1 wherein the latch bolt is pivotally mounted upon the latch lever for movement relative thereto out of a keeper engaging position to enable the latch bolt to be swung to a keeper releasing position independently of the electromagnet; and further characterized by the provision of means for releasably holding the latch bolt against pivotal motion, relative to the latch lever, out of its keeper engaging position.

3. The latch set forth in claim 1 wherein said means for rocking the latch lever to its keeper releasing position upon response of the core element to energization of the electromagnet comprises a spring acting on the latch lever to yieldingly resist propulsion thereof to its keeper engaging position by the cam on the core element.

4. In a latch of the character described: a latch lever having a keeper engaging latch bolt thereon; pivot means mounting the lever for rocking motion between defined positions in one of which the latch bolt is engageable with a keeper and in the other of which the latch bolt is released from the keeper; an electromagnet having a pivotally mounted core element which swings in one direction in response to energization of the electromagnet, against the force of a relatively heavy biasing spring tending to swing the core element in the opposite direction toward a retracted position; a cam on the core element movable therewith toward and away from the latch lever pivot, response of the core element to energization of the electromagnet moving the cam away from the latch lever pivot; an abutment on the latch lever, spaced from the pivot thereof, and movable with the lever upon rocking thereof to its keeper releasing position into the path of the movement of said cam to block spring biased swinging motion of the core element, said abutment being carried out of the path of said cam by rocking of the latch lever toward its keeper engaging position to free the core element for spring propelled swinging motion to the retracted position thereof and in which the cam engages the lever abutment to block rocking motion of the latch lever out of its keeper engaging position, said cam acting upon the abutment during rocking of the latch lever out of its keeper releasing position to propel the lever to its keeper engaging position under the force of the biasing spring acting upon the core element; and means rendered effective upon response of the core element to energization of the electromagnet for moving the latch lever to its keeper releasing position.

5. The latch set forth in claim 4 wherein the keeper releasing position of the latch lever is defined by the engagement of cooperating stops on the latch lever and the core element.

6. The latch set forth in claim 4 wherein the keeper releasing position of the latch lever is defined by the engagement of said abutment on the latch lever with a shoulder on the core element adjacent to the cam thereon.

7. Latching mechanism of the type wherein movement of a latching element from an operative keeper engaging position to an inoperative keeper releasing position is effected as a consequence of energization of an electromagnet to cause core means for the electromagnet to move from retracted to attracted positions: characterized by the fact that said latching mechanism comprises two cooperating members movable relative to one another, one of said members comprising a portion of the latching element; a connection between the other of said members and the core means constraining said other member to move with the core means during attraction thereof; and cooperating parts on said members brought into inter-

engagement by movement of the core means to attracted position and the latching element to its keeper releasing position to releasably hold the latching element in its inoperative keeper releasing position out of which it may be tripped by moving one of said cooperating members relative to the other independently of the electromagnet.

8. In a door latch of the type wherein movement of a door latching element from an operative latching position to an inoperative unlatching position is effected in consequence of movement of a core element of an electromagnet from retracted to attracted positions in response to energization of the electromagnet: arms connected with said elements to move therewith and interconnected with one another to provide toggle linkage between said elements having a dead center position reached during final unlatching motion of the latching element in consequence of attraction of the core element to cause the latching element to be releasably maintained in its unlatching position and the core element to be releasably held in its attracted position until the toggle linkage is tripped out of its dead center position independently of the electromagnet, and a relatively strong spring acting on said toggle linkage to effect forceful return of the latching element to its latching position upon tripping of said toggle linkage out of dead center position.

9. The latch set forth in claim 8 wherein the core element of the electromagnet has an integral portion thereof providing one of said links and wherein said spring acts directly upon the core element to yieldingly hold the same in its retracted position; and further characterized by the provision of a relatively weak spring acting upon the latching element in a direction to yieldingly resist motion thereof to its operative latching position, said last designated spring being rendered operative to swing the latching element to its inoperative unlatching position upon motion of the core element to its attracted position.

10. In a door latching mechanism of the type wherein movement of a latching element from an operative latching position to an inoperative unlatching position, with respect to a keeper having a bolt engaging surface facing in the direction of door opening motion, frees the door for opening and is effected by an electro-magnetic operator as a consequence of motion of core means thereof from a retracted to an attracted position in response to energization of the electromagnet: a latch bolt carried by the latching element for bodily motion therewith to and from engagement with said surface on the keeper; means mounting the latching element for back and forth motion between its operative and inoperative positions along a path which carries the latch bolt in opposite directions generally corresponding to the directions of door opening and door closing motion; biasing means forming part of the electromagnetic operator and operable upon the latching element to forcefully drive the same to its operative position, said biasing means acting upon the latch bolt through the latching element as the latch bolt is carried thereby into engagement with said surface on the keeper to cause the bolt to draw the door tightly closed; and means mounting the latching bolt on the latching element for movement relative thereto out of its keeper engaging position in a direction substantially crosswise of the first designated motion of the bolt.

11. In door latching mechanism including a latching element movable back and forth between latching and unlatching positions, and an electromagnetic actuator including core means movable from retracted to attracted positions in response to energization of the electromagnet, and wherein movement of the latching element to an unlatching position is effected as a consequence of movement of the core means to attracted position: cooperating parts on the latching element and the core means brought into interengagement with one another as a consequence of attraction of the core means in response to energization of the electromagnet, the interengagement of said cooperating parts releasably holding the latching element in its unlatching position out of which it must be tripped by the application of a force thereto independently of the electromagnet to free the latching element for travel to its latching position.

12. In an electromagnetically releasable latch mechanism of the type having a movable latching element and a latch bolt on the latching element carried bodily thereby to and from a keeper releasing position: means for effecting energization of the electromagnet comprising a switch, and actuating means for the switch including a manually movable member movable in one direction from one position to another to effect closure of said switch; means mounting the latch bolt on the latching element for motion relative thereto so as to enable the latch bolt to be moved to another keeper releasing position independently of the electromagnet; and means for moving the latch bolt relative to the latching element, to said other keeper releasing position, in consequence of movement of said manually movable member in said direction a distance beyond said other position thereof, said last named means comprising linkage, and means providing a lost motion connection between the linkage, said movable member, and the latch bolt, said lost motion connection providing for movement of said movable member in said direction the distance necessary to effect closure of the switch without imparting keeper releasing motion to the latch bolt.

13. In a door latch of the type wherein movement of a latching element from an operative keeper engaging position to an inoperative keeper releasing position releases a door for opening and is effected as a consequence of movement of core means of an electromagnet from a retracted to an attracted position in response to energization of the electromagnet: a loaded biasing spring connected to said core means to yieldingly hold the same in its retracted position and to be additionally loaded in consequence of response of the core means to energization of the electromagnet; cooperating parts on the core means and the latching element brought into interengaging relationship with one another as a consequence of energization of the electromagnet and release of the latching element, to releasably hold the core means in its attracted position and thereby maintain the biasing spring in said additionally loaded condition and to releasably hold the latching element in its inoperative position, thereby requiring tripping of the latching element out of its inoperative position, independently of the electromagnet, to release the core means for retraction; and a connection between said core means and the latching element rendered effective upon such tripping of the latching element out of its inoperative position, through which connection the force of the biasing spring acting upon the core means is applied to the latching element to forcefully propel the latter to and hold it in its operative keeper engaging position.

14. In a latch of the type wherein movement of a latching element from an operative keeper engaging position to an inoperative keeper releasing position is effected as a consequence of movement of core means of an electromagnet from retracted to attracted positions in response to energization of the electromagnet: cooperating parts on said core means and the latching element which engage one another to block keeper releasing motion of the latching element when the core means is in its retracted position, said cooperating parts engaging one another when the core means is in attracted position and the latching element is in its keeper releasing position to releasably hold the latching element in its inoperative keeper releasing position and to block retracting motion of said core means, thereby requiring tripping of said latching element out of its inoperative position independently of the electromagnet to carry the latching element part-way toward its operative position before the core means can be retracted.

15. In electromagnetically controlled latch mechanism of the type wherein movement of a latching element from an operative keeper engaging position to an inoperative keeper releasing position is effected as a consequence of energization of an electromagnet to carry core means for the electromagnet from a retracted to an attracted position: a pivotally mounted lever connected with said core means to be driven back and forth thereby during attracting and retracting motion of the core means; and cooperating parts on said lever and the latching element which engage one another to block keeper releasing motion of the latching element when the core means is in its retracted position, said cooperating parts engaging one another when the core means is in attracted position and the latching element is in its keeper releasing position to releasably hold the latching element in its inoperative keeper releasing position out of which it may be tripped independently of the core means for travel to its operative keeper engaging position.

16. In door latch mechanism of the type wherein movement of a latching element from latching to unlatching positions is effected as a consequence of energization of an electromagnet having core means movable from retracted to attracted positions in response to such energization of the electromagnet: means mounting the latching element for swinging motion to and from its latching and unlatching positions; cooperating cam elements on said core means and the latching element for camming the latter to its latching position as a consequence of retraction of the core means, said cam elements engaging one another to releasably hold the latching element in said unlatching position when the core means is in attracted position, and to block retracting motion of the core means, thereby requiring tripping of said latching element out of its unlatching position before the core means can be retracted; and a spring acting on the core means to yieldingly bias the same toward its retracted position, said spring acting through the cam elements to forcefully propel the latching element to its latching position during retraction of the core means.

17. Door latch mechanism of the type wherein movement of a latching element from a keeper engaging position to a keeper releasing position is effected as a consequence of movement of core means for an electromagnet from a retracted to an attracted position in response to energization of the electromagnet, characterized by: the provision of a cam constrained to move back and forth along a fixed path and bearing against a portion of the latching element to cam the latter to its keeper engaging position during motion of the cam in one direction to a first position thereof; a spring connected with the cam for forcefully propelling the same in said direction to said first position thereof, whereby the spring acts upon the latching element through said cam to firmly hold the latching element in its keeper engaging position; and a motion transmitting connection between the core means and said cam by which the cam is moved in the opposite direction to a second position thereof at which said spring is loaded, concomitantly with release of the latching element, as a consequence of energization of the electromagnet.

18. The door latch mechanism of claim 17, further characterized by the provision of means rendered operative by the core means as a consequence of movement thereof to its attracted position for releasably holding the cam in said second position thereof at which said spring is loaded.

19. In a latch of the type wherein movement of a latching element from an operative keeper engaging position to an inoperative keeper releasing position is effected as a consequence of movement of core means of an electromagnet from retracted to attracted positions in response to energization of the electromagnet: cooperating parts on said core means and the latching element which engage one another to block keeper releasing motion of the latching element when the core means is in its retracted position, said cooperating parts engaging one another when the core means is in attracted position and the latching element is in its keeper releasing position to releasably hold the latching element in its inoperative keeper releasing position and to block retracting motion of said core means, thereby requiring tripping of said latching element out of its inoperative position independently of the electromagnet to carry the latching element part-way toward its operative position before the core means can be retracted; and spring means acting upon the core element to yieldingly hold the same in its retracted position, said spring means acting through said cooperating parts on the elements during retraction of the core element to effect forceful propulsion of the latching element to its keeper engaging position.

20. In a door latch of the type wherein movement of a door latching element from an operative latching position to an inoperative unlatching position is effected in consequence of movement of a core element of an electromagnet from retracted to attracted positions in response to energization of the electromagnet: arms connected with said elements to move therewith and interconnected with one another to provide toggle linkage between said elements having a dead center position reached during final unlatching motion of the latching element in consequence of attraction of the core element to cause the latching element to be releasably maintained in its unlatching position and the core element to be releasably held in its attracted position until the toggle linkage is tripped out of its dead center position independently of the electromagnet; a latch bolt mounted on said latching element for bodily movement therewith between keeper engaging and keeper releasing positions and for motion relative to the latching element out of keeper engaging position so as to provide for release of the latch bolt in the operative position of the latching element independently of the electromagnetic actuator for the latching element; and means for releasably holding the latch bolt against motion relative to the latching element, out of the keeper engaging position of the latch bolt.

21. In combination with a door for an enclosure: an electromagnet; latching mechanism for the door comprising a latching member movable from a latching to an unlatching position to free the door for opening, and a movable core member connected with said latching member and movable from a retracted position to an attracted position in response to energization of the electromagnet to effect motion of the latching member to its unlatching position; an energizing circuit for said electromagnet including a manually operable switch biased to open position, and a second switch biased to closed position and in series with said manually operable switch, said second switch having an actuator; and means mounting said second switch with its actuator adjacent to the latching mechanism in a position to be actuated by one of said members so that said second switch is opened thereby and the energizing circuit for the electromagnet is disrupted as a consequence of motion of said members to unlatching positions.

22. The combination set forth in claim 21 further characterized by the provision of cooperating means on said latching and core members which are brought into interengagement in the unlatching positions of said members to releasably hold said latching mechanism in an unlatching condition.

23. The combination set forth in claim 21 wherein said latching member is mounted for swinging movement between an operative latching position and an inoperative unlatching position; and wherein said second switch is actuated to open position by said latching member to disrupt the energizing circuit for the electromagnet upon swinging of the latching member to its unlatching position.

24. The combination set forth in claim 21 wherein said

second switch is actuated to open position by the core member to disrupt the energizing circuit for the electromagnet upon travel of the core member to said attracted position thereof.

25. In a door latching mechanism for the door of an enclosure having an interior light: a latching member movable from latching to unlatching positions to free the door for opening; a movable latch operating member for the latching member to effect motion thereof to its unlatching position as a consequence of motion of the latch operating member from one position to another; interengaging means on the latching and latch operating members cooperable to effect motion of the latching member to its latching position as a consequence of return motion of the latch operating member to said one position thereof; an energizing circuit for said interior light including a normally open switch which must be closed to complete said circuit; and means on one of said members for actuating said switch to closed position as a consequence of movement of said latch operating member to said other position thereof to effect unlatching motion of the latching member.

26. The door latching mechanism set forth in claim 25 wherein said interengaging means on the latching and latch operating members cooperate to releasably hold the latching member in its unlatching position and to releasably hold the latch operating member in said other position thereof, whereby said switch is held closed until such time as the latching member is tripped out of unlatching position.

References Cited in the file of this patent

UNITED STATES PATENTS

1,325,112	Rodgers	Dec. 16, 1919
1,764,784	Freeman	June 17, 1930
1,822,611	Cartia	Sept. 8, 1931
2,234,474	Higham et al.	Mar. 11, 1941
2,259,136	Hogg	Oct. 14, 1941
2,325,225	Burke	July 27, 1943
2,359,150	Peglow	Sept. 26, 1944
2,439,920	Brown	Apr. 20, 1948
2,519,197	Preston	Aug. 15, 1950
2,550,496	Reifschneider	Apr. 24, 1951
2,606,052	Soreng et al.	Aug. 5, 1952
2,679,425	Johnson	May 25, 1954