April 29, 1941. J. J. B. RUTHERFORD 2,240,021

METHOD OF PREVENTING WEDGE AND CONTACT CORROSION OF METALS AND ALLOYS

Filed Aug. 16, 1935

Fig. 1.

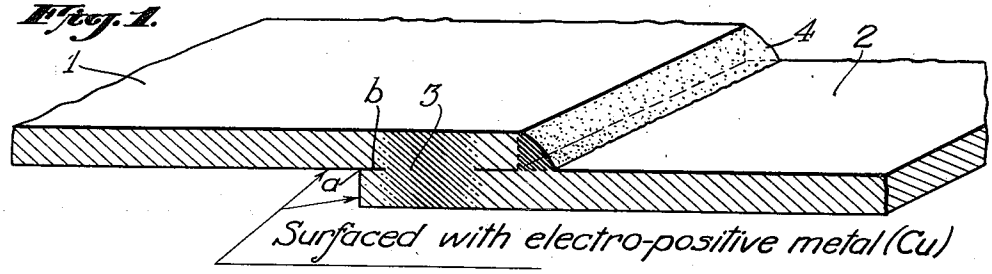

Fig. 2.

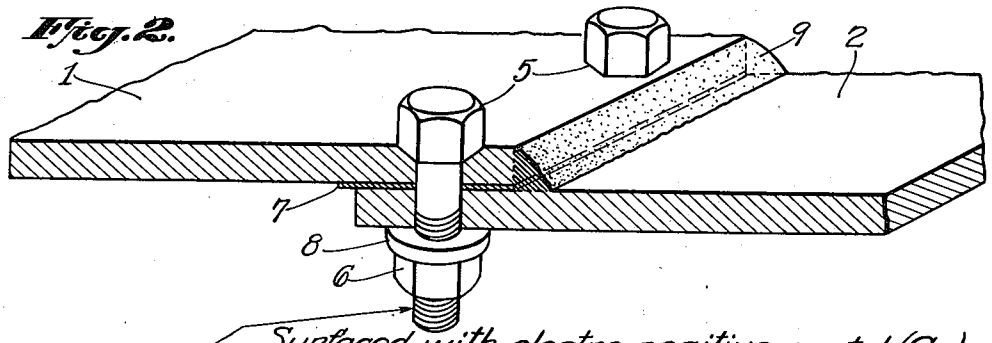

Fig. 3.

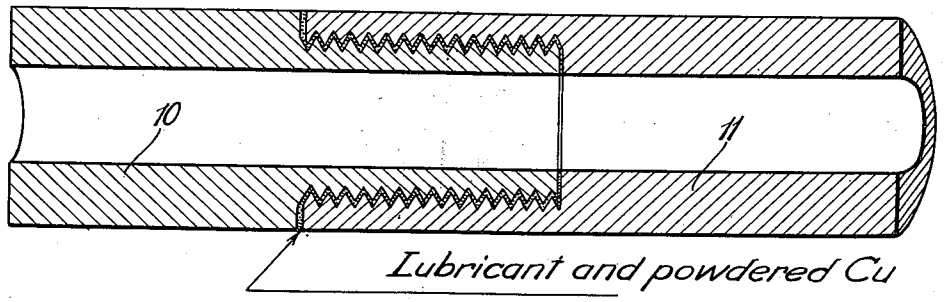

Fig. 4.

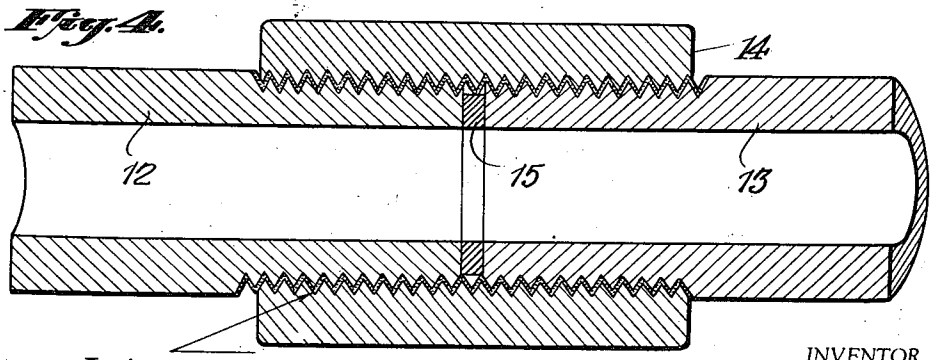

INVENTOR.
BY JOHN J. B. RUTHERFORD.
Mann & Lauber
ATTORNEYS

Patented Apr. 29, 1941 2,240,021

UNITED STATES PATENT OFFICE

2,240,021

METHOD OF PREVENTING WEDGE AND CONTACT CORROSION OF METALS AND ALLOYS

John J. B. Rutherford, Jersey City, N. J., assignor to United States Steel Corporation, New York, N. Y., a corporation of New Jersey

Application August 16, 1935, Serial No. 36,575

2 Claims. (Cl. 204—148)

This invention relates to metallurgy and more particularly to a method of preventing wedge and contact corrosion between contacting and close spaced surfaces of metals and alloys in contact with or immersed in an electrolyte. More particularly this invention relates to corrosion resisting alloys of the austenitic chromium-nickel-iron type.

"Wedge" or "contact" corrosion has heretofore been recognized in the art and is obtained when a metallic piece is immersed in an electrolyte in contact with or in relatively close spaced relationship to another metallic or non-metallic piece such as glass. It appears to be electrolytic in nature with the more electro-positive metal bearing the brunt of the corrosion attack and is occasioned by the relative stagnation of the electrolyte in the narrow space adjacent the point of contact or within the crevice between the adjacent pieces which prevents the normal resistance of the metallic piece to the electrolyte from functioning. Austenitic chromium-nickel-iron alloys evidence this type of corrosion irrespective of the normal corrosion resistance of a free surface of the alloy to the particular electrolyte present and the useful application of these alloys in various types of chemical apparatus thereby is seriously limited.

One of the objects of the present invention is to prevent or immunize a metal from the deleterious effects of "wedge" or "contact" corrosion. Another object is to provide means to protect metallic surfaces, particularly austenitic stainless chromium-nickel-iron alloys from "wedge" or "contact" corrosion. Still another object of this invention is to extend the useful application of austenitic stainless chromium-nickel-iron alloys. Other objects and advantages will become apparent as the invention is more fully disclosed.

In accordance with the above objects I have discovered that "wedge" or "contact" corrosion of the metals and alloys and particularly austenitic chromium-nickel-iron alloys may be eliminated by interposing between the contacting or close spaced surfaces certain protective and more electro-positive metals such as copper, tin, bronze, cadmium, silver, and the like and alloys thereof which are more electro-positive than the said metals. The interposed metal may be a relatively thin film deposited upon the surface of one or both contacting or close spaced surfaces, or may be a separate section interposed therebetween or may be in the form of metal powder distributed or suspended within suitable packing or lubricant material. It is not essential that the interposed protective metal be substantially pure metal. Alloys consisting predominantly of the protective metal are to be considered substantial equivalents for the purpose of the present invention. In the case of copper, for example, brass and Monel metal, both copper-bearing alloys, behave similarly to copper, and may be employed with substantial equal efficiency.

Before further disclosing the present invention reference should be made to the accompanying drawing wherein:

Fig. 1 illustrates as one specific embodiment the application of the present invention to welded structures;

Fig. 2 illustrates as a second specific embodiment the application of the present invention to threaded bolt joints;

Fig. 3 illustrates as a third specific embodiment the application of the present invention to threaded tube joints; and

Fig. 4 illustrates as a fourth specific embodiment the application of the present invention to pipe-sleeve joints.

As an example of the present invention but not in limitation thereof, the present invention will be described as it has been applied to an austenitic stainless steel alloy known in the art as "18–8" alloy. This alloy contains approximately 18 per cent chromium, 8 per cent nickel and the balance mainly iron. The carbon content of the alloy usually approximates .10 per cent or less and small amounts of silicon and manganese are usually present. For special purposes, one or more of the elements of titanium or vanadium group of elements, molybdenum, tungsten, cobalt, aluminum, copper and the like may be present in alloying percentages to impart special properties to the alloy. Such an "18–8" alloy if immersed in or exposed to an electrolyte containing even small quantities of chloride such as ferric chloride will rapidly corrode at points of contact or near contact with other bodies of metals and non-metals, irrespective of whether the free surface of the alloy is or is not resistant to the said electrolyte.

I have found that "wedge" or "contact" corrosion of this alloy may be totally eliminated by superficially coating the alloy or the part thereof exposed to "wedge" or "contact" corrosion with a protective and electro-positive metal such as copper, tin, silver, cadmium or alloys of these metals with other metals consisting predominantly of at least one of these said protective metals.

As an illustration one method of coating the

surface of the "18–8" alloy consists in "plating" the protective metal thereon. Plating may be accomplished electrolytically or by displacement from solution. These protective metals being relatively low in the electromotive series are readily displaced from solution by the iron in the 18–8 alloy. This may be accomplished by immersing the 18–8 alloy in a solution containing sufficient acid (preferably about 5 per cent HCl) to break down the naturally passive surface protecting film of the alloy and also containing a proportion of (preferably about 10 per cent) a salt or compound of the protective metal, such as copper chloride, cadmium chloride or tin chloride. After a short time interval the iron of the alloy by displacement precipitates copper out of the solution onto the surface of the alloy. Thereafter, the 18–8 alloy may be immersed in various electrolytes without evidencing "wedge" or "contact" corrosion. I have found the deposit of copper thus formed on the surface of the corrosion resistant 18–8 alloy need only be a relatively thin film, not even enough to be visible, to be effective in preventing "wedge" or "contact" corrosion of the 18–8. The efficiency of even a relatively thin and substantially invisible film of the protective metal is believed due to the stagnation of the electrolyte within the crevice adjacent the point of contact and between the close spaced surfaces which prevents diffusion of the electrolyte and depletion of the metal of the protective film.

Referring to Fig. 1, I have illustrated the adaptation of superficial coatings of the protective electro-positive metal in the forming of welded joints between sheets or plates comprised of so-called "stainless" steel. Sheets 1 and 2 superficially coated with copper in the manner hereinabove described are welded together in overlapping relationship at 3 or at 4 in any convenient manner as heretofore practiced in the art. This manner of joining sheets is frequently employed in the building up of containers, vats and the like wherein corrosive solutions are to be retained. In such structures the solution is in contact with one face of the structure. Assuming this face to be the bottom face of the assembly illustrated in Fig. 1 "wedge" or "contact" corrosion will proceed at point *a* and within overlapping *b*. The presence of a more electro-positive metal (Cu) upon the surface of the sheets 1 and 2 will totally inhibit "wedge" or "contact" corrosion at point *a* and in area *b*. As heretofore mentioned this surface coating of the more electro-positive metal need only be a relatively thin film that is barely visible.

Alternatively, I have found that it is not essential that the protective metal (Cu, etc.) be coated on or firmly adherent to the surface or the 18–8 alloy.

In situations where it is difficult to apply to the surface the plated film of protective metal as hereinabove described, or electrolytically, I have found it equally as effective to interpose between the spaced surfaces a mass of the said protective metal (Cu) such as, for example, a gasket or spacer element, which prevents actual contact of the 18–8 alloy with the other metal or non-metal. In such an arrangement the stainless alloy will not evidence any corrosion in contact with the protective metal (Cu) but the protective metal will evidence corrosion. This is due, it is believed, to the fact that the polarity of the electrolytic cell is reversed and the chlorine (or other acid radical in the electrolyte) goes to the interposed copper instead of to the austenitic alloy. Whatever the reason may be, the interposed protective metal (copper) bears the brunt of the corrosive action and the austenitic alloy remains unattacked over prolonged periods of time and the stagnation or slow rate of diffusion of the electrolyte prevents rapid dissolution of the interposed protective metal.

Referring to Fig. 2, I have indicated the application of a spacer element in threaded bolt joints. Sheets or plates 1 and 2 are joined in overlapping relationship by threaded bolt 5 and nut 6 with a thin strip 7 comprised of electro-positive metal (Cu) interposed between the overlapping surfaces of sheets 1 and 2 and with washer 8 comprised of electro-positive metal (Cu) interposed between the nut 6 and the face of sheet 2. Preferably also the threaded shank of bolt 5 is surfaced with electro-positive metal (Cu). A plurality of such joints along the overlapping length of sheets 1 and 2 are provided with strip 7 functioning somewhat in the nature of a gasket. To insure a tight joint a weld junction 9 may be provided between sheets 1 and 2.

In this structure "wedge" or "contact" corrosion between sheets 1, 2, bolt 5 and nut 6 is substantially eliminated. Alternatively I have found that elements 7 and 8 (Fig. 2) may be comprised of non-metallic material plastic, semi-plastic or non-plastic in nature through which is dispersed the said protective metal in finely divided form. For example, it may be comprised of asbestos fiber impregnated with copper either intimately admixed therewith or precipitated therein. The asbestos fiber may be interposed between the said surfaces in any convenient manner as loose fibers, or as a plastic, semi-plastic or a non-plastic solid element.

As a third alternative of the present invention I have found that the protective metal may be interposed between the contacting or close spaced surfaces as a fine powder distributed throughout or suspended in oils, greases and waxes employed as lubricants and packing materials. This is particularly applicable at threaded joints and pipe-sleeve fittings.

It is well recognized that when two similar metals are locked together mechanically, as at threaded joints, they tend to "freeze" together in the absence of a separating film of lubricant. To overcome this, various types of non-freezing steels and stainless chromium-nickel-iron alloys have been developed. In spite of this development "contact" corrosion occurs in the threaded joint irrespective of whether lubricants or packing materials are employed. When the thus joined metals are dissimilar or where a dissimilar collar or sleeve member or a nonmetallic member, such as glass, is employed, the "contact" corrosion of the alloy may be even accelerated.

I have found, however, that by suspending in the oil, grease or wax utilized as a lubricant or by incorporating in the packing material employed, one of the above identified protective metals in fine powder form, the "contact" corrosion is completely eliminated.

The amount of the powdered metal added to the lubricant, packing material or interposed spacer element in accordance with the present invention may vary widely without departing essentially from the present invention. It is apparent that as a relatively thin film plating of the protective metal is effective to eliminate "wedge" or "contact" corrosion in these stainless alloys, and that as a relatively thin spacer ele-

ment interposed between contacting or close spaced surface is equally as effective, it would require only a relatively small amount of metal powders dispersed in the oil, grease or packing material to accomplish the same result. There does not appear to be any limit upwardly of this relatively small amount of protective metal.

Referring to Figs. 3 and 4, I have illustrated the application of this specific embodiment in threaded joints and in pipe-sleeve joints respectively.

In Fig. 3 the threaded joint between pipe ends 10 and 11 is provided with a lubricant containing powdered electro-positive metal (Cu). The lubricant may be any suitable oil, grease or wax as heretofore employed in the art. The particle size of the powdered Cu preferably is relatively small. Alternatively it is to be recognized that the surface of the threaded end sections of each pipe 10 and 11 may be coated with copper in the manner as hereinabove described with respect to Fig. 1 and that any suitable lubricant with or without powdered copper may be employed if desired.

In Fig. 4 I have illustrated a typical pipe and sleeve joint wherein the abutting ends of pipes 12 and 13 are rendered fluid tight. In such a joint I preferably interpose between pipe ends 12 and 13 a washer element 15 comprised of an electro-positive metal such as copper and preferably pack the interstices between the exterior surfaces of pipes 12 and 13 and the inner surface of sleeve 14 with suitable lubricating material through which is dispersed finely divided electro-positive metal such as copper. Alternatively I may interpose a washer element comprised of suitable packing materials impregnated with copper powder in place of washer 15 as heretofore described in Fig. 2. And I may as a second alternative surface the abutting ends of pipes 12 and 13 with copper substantially as described with respect to Fig. 1.

Having broadly and specifically described the present invention and given as one specific embodiment thereof the practice of the same with one specific alloy, together with several modifications thereof, it is apparent that many modifications and adaptations may be made without departing from the nature and scope thereof, and all such modifications and adaptations are contemplated as fall within the scope of the accompanying claims. In the claims the term "stainless steel" is employed to define an iron or steel alloy containing chromium in that amount necessary to impart to the alloy the quality of stainlessness or corrosion resistance.

What I claim is:

1. The method of preventing corrosion of the close spaced surfaces of joined, jointed and overlapping structures comprised of austenitic stainless steel by electrolytes entrapped in the space gap therebetween which consists in disposing within said space gap a lubricant consisting at least in part of a finely divided protective metal of the group consisting of Cu, Sn, Cd, Ag and alloys of these metals with other metals, said alloys consisting predominantly of at least one of said protective metals, said protective metal being the sole agency inhibiting said corrosive attack.

2. The method of preventing corrosion of the close spaced surfaces of joined, jointed and overlapping structures comprised of austenitic stainless steel by electrolytes entrapped in the space gap therebetween which consists in disposing within said space gap a packing material consisting at least in part of a finely divided protective metal of the group consisting of Cu, Sn, Cd, Ag and alloys of these metals with other metals, said alloys consisting predominantly of at least one of said protective metals, said protective metal being the sole agency inhibiting said corrosive attack.

JOHN J. B. RUTHERFORD.