Oct. 2, 1962 F. L. GILLETT 3,056,287

CABLE ANCHOR

Filed Oct. 21, 1957 2 Sheets-Sheet 1

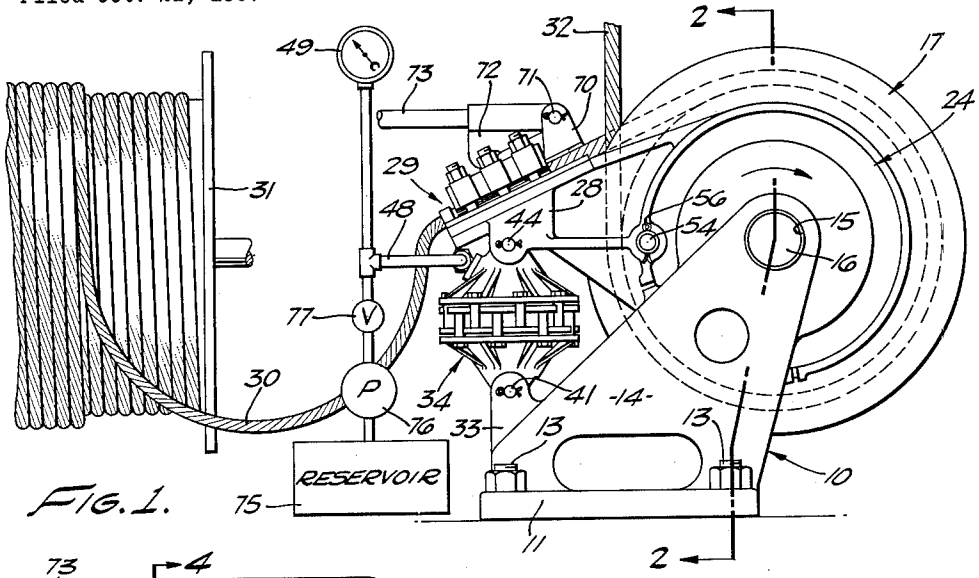

FIG. 1.

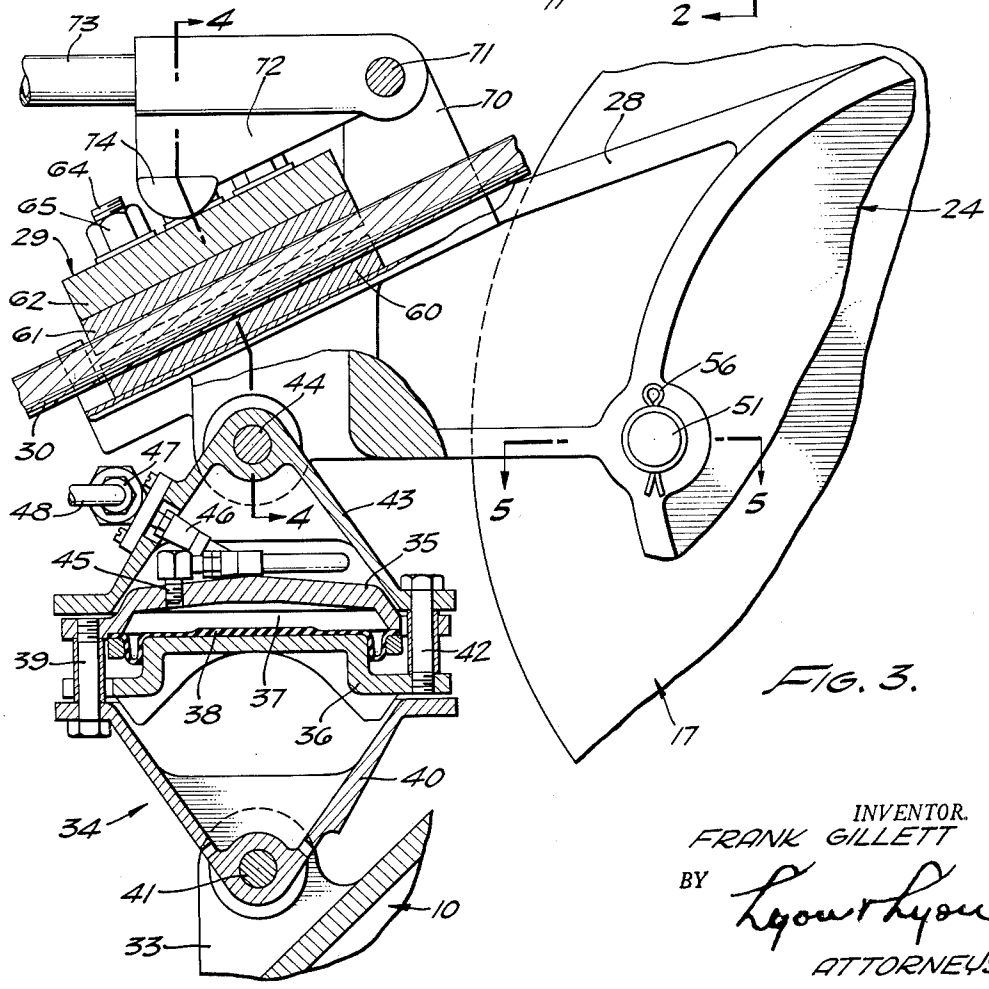

FIG. 3.

INVENTOR.
FRANK GILLETT
BY Lyon & Lyon
ATTORNEYS

CABLE ANCHOR

Filed Oct. 21, 1957 2 Sheets-Sheet 2

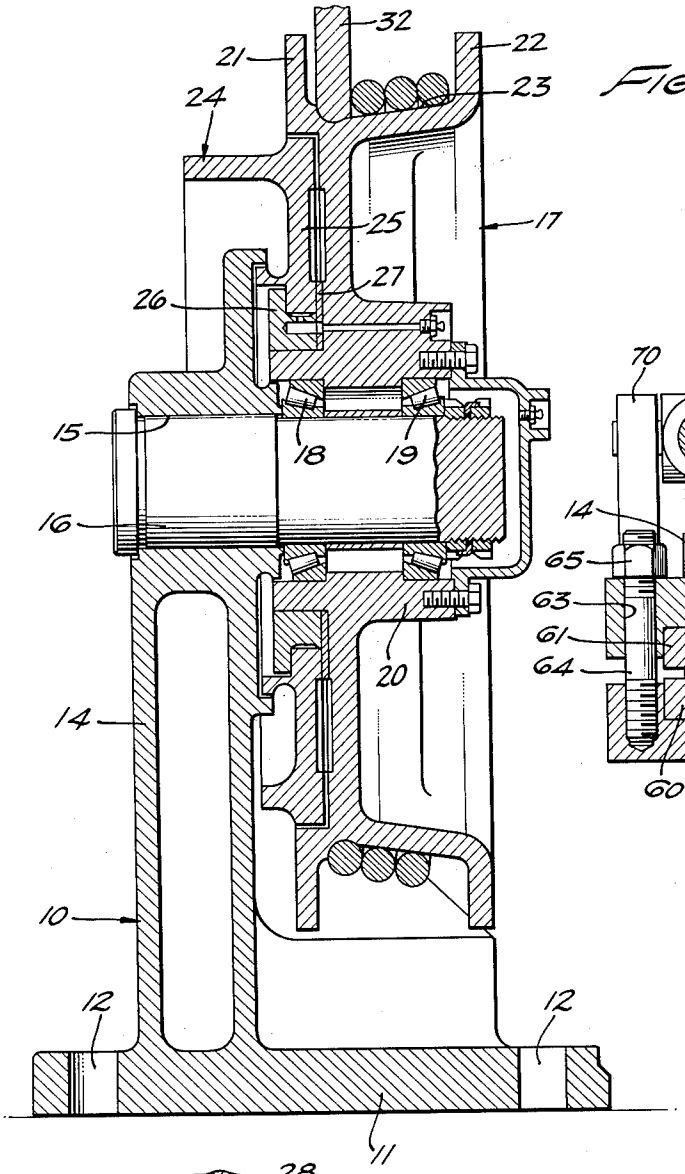

FIG. 2.

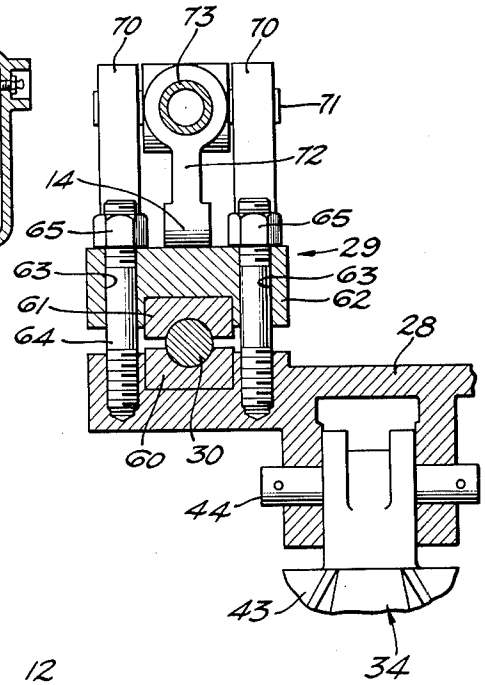

FIG. 4.

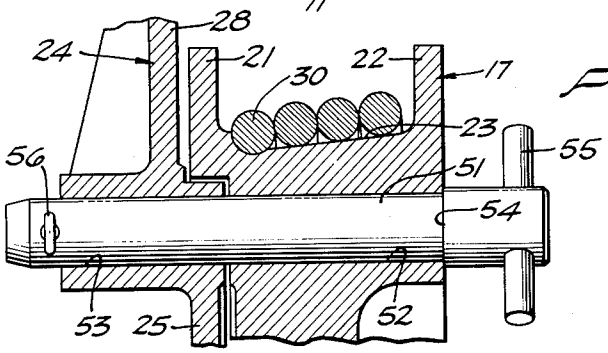

FIG. 5.

INVENTOR.
FRANK L. GILLETT
BY Lyon & Lyon
ATTORNEYS

United States Patent Office

3,056,287

Patented Oct. 2, 1962

1

3,056,287

CABLE ANCHOR

Frank L. Gillett, Sherman Oaks, Calif., assignor, by mesne assignments, to Armco Steel Corporation, Middletown, Ohio, a corporation of Ohio

Filed Oct. 21, 1957, Ser. No. 691,184
11 Claims. (Cl. 73—143)

This invention relates to apparatus for securing a cable at a location between its ends and for providing a measure of the tension load on the cable. Devices of this type are employed in connection with the drilling of wells; the cable passes from the drawworks drum through the hoisting blocks and is anchored by such a device near the derrick floor. The anchor device includes apparatus for measuring the tension in the cable. A device of this general type is shown in the Spalding Patent 2,488,070, granted November 15, 1949.

It is the principal object of this invention to provide an improved cable anchor device of this type, the device including a snubbing drum which is rotatably mounted to facilitate transfer movement of the cable into the receiving system when desired, together with novel means for securing the drum against rotation and for measuring the torque load thereon. Another object is to provide a cable anchor device of this type in which the snubbing surface of the drum is tapered to cause the cable to travel axially thereon as the drum rotates. Another object is to provide a cable anchor device of this type having cable clamp means mounted on a torque arm, together with means for applying a friction drag force to the cable as it passes through the clamp means and around the drum during the operation of feeding cable into the reeving system. Other and more detailed objects and advantages will appear hereinafter.

In the drawings:

FIGURE 1 is a side elevation showing a preferred embodiment of my invention.

FIGURE 2 is a sectional elevation taken substantially on the lines 2—2 as shown in FIGURE 1.

FIGURE 3 is an enlarged sectional view of a portion of FIGURE 1.

FIGURE 4 is a sectional elevation taken substantially on the lines 4—4 as shown in FIGURE 3.

FIGURE 5 is a sectional detail taken substantially on the lines 5—5 as shown in FIGURE 3.

Referring to the drawings, the base **10** is provided with a footing portion **11** having apertures **12** to receive anchor bolts **13**. The base **10** is also provided with an upright portion **14** having a bore **15** to receive a stationary pintle or stub shaft **16**. A snubbing drum **17** is rotatably mounted upon this stub shaft **16** by means of axially spaced bearings **18** and **19**. The bearings are received within the hub **20** of the drum **17**.

The outer periphery of the drum **17** is provided with a pair of axially spaced radial flanges **21** and **22** and an inclined or tapered snubbing surface **23** extending between the flanges.

A load carrying member generally designated **24** includes a ring **25** rotatably mounted on the drum hub **20** by means of anti-friction bushings **26** and **27**. The load carrying member **24** also includes the laterally extending torque arm **28** which is formed integrally on the ring **25**. The torque arm **28** carries a releasable cable clamp device generally designated **29** which is aligned tangentially with the snubbing surface **23** at the large end of the taper. The cable **30** extends from the storage reel **31** through the clamp device **29** and passes around the snubbing surface **23** in a plurality of loops. The active portion **32** of the cable **30** extends upward to the hoisting blocks (not shown).

A hydraulic pressure capsule is interposed between a

2

torque arm **28** and the lug **33** on the base **10**. This pressure capsule generally designated **34** includes a pair of relatively movable plates or disks **35** and **36** defining a fluid pressure chamber **37** between them. A flexible sealing member **28** prevents leakage between the parts **35** and **36**. The upper plate **35** is connected by means of bolts **39** to the frame **40** which is pivoted at **41** to the lug **33** on the base **10**. Similarly the lower plate **36** is connected by means of bolts **42** to the cover **43** which is connected to the torque arm **28** by means of the pivot pin **44**. From this description it will be understood that when an upward force is applied by the pin **44** to the cover **43**, the fluid body within the chamber **37** is pressurized in proportion to the magnitude of the force exerted. Suitable piping connections **45**, **46** and **47** connect the interior of the fluid chamber **37** to the pipe **48**. This pipe **48** communicates with the pressure gauge **49** which may be calibrated to indicate tension in the cable.

Means are provided for connecting the load carrying member **24** to turn as a unit with the drum **17** on the axis of the stub shaft **16**. As shown in the drawings, this means includes the axially movable pin **51** which extends through aligned apertures **52** and **53** provided in the drum **17** and load carrying member **24** respectively. The pin may be shouldered as shown at **54** and provided with a handle **55**. A retaining cotter pin **56** prevents accidental withdrawal. When the pin **51** is in the operative position shown in FIGURE 5 the ring **25** and torque arm **28** are connected as a unit to the drum **17**. When the pin **51** is withdrawn from the aligned apertures **52** and **53**, the drum **17** is free to rotate on the bearings **18** and **19**.

The clamp device **29** includes jaw **60** fixed on the torque arm **28** and jaw **61** mounted on the movable carrier **62**. This carrier **62** is provided with apertures **63** which receive a plurality of parallel studs **64**. The upper ends of the studs are threaded to receive clamping nuts **65**. The carrier **62** slides on the parallel studs **64** and the extent of movement is limited by the position of the nuts **65**. When the nuts **65** are tightened down, the cable **30** is clamped against movement between the jaws **60** and **61**.

Integral upstanding lugs **70** are provided on the torque arm **28** and a cross pin **71** mounted in these lugs supports brake arm **72** and brake lever **73**. When a downward force is applied to the lever **73** the brake arm **72** is caused to swing about the pivot pin **71** and cause the nose portion **74** to exert a clamping force on the carrier **62**.

In operation, several loops of the cable **30** are spooled on the snubbing surface **23** of the drum **22**. The active portion **32** of the cable extends upward to the hoisting blocks (not shown). A portion of the cable is received between the clamping jaws **60** and **61**. When it is desired to pass additional cable into the reeving system to replace worn cable cut from the end spooled on the drawworks spooling drum, the torque transmitting connecting pin **51** is withdrawn from the aligned apertures **52** and **53**. The drum **17** is then free to turn on the bearings **18** and **19**. The nuts **65** are loosened to permit the cable **30** to slide between the gripping jaws **60** and **61**. The brake lever **73** is employed to exert pressure against the carrier **62** and thus supply a friction drag to the cable **30** as it passes between the jaws **60** and **61**. When the desired footage of additional cable has been passed into the reeving system, the connecting pin **51** is reinserted into the apertures **52** and **53** and the nuts **65** are tightened on the threaded studs **64** to clamp the cable **30** against movement relative to the jaws **60** and **61**. Tension in the active portion **32** of the cable **30** then causes the torque arm **28** to apply a load to the hydraulic pressure capsule **34** and thereby pressurize fluid within the chamber **37** to an extent proportional to the torque load on the drum **17**. The tension load on the

cable is then accurately shown by the reading of the pressure gauge 49.

The usual reservoir 75, pump 76, check valve 77 may be employed for maintaining a proper supply of fluid within the chamber 37 and for piping it to the pressure gauge 49.

Having fully described my invention, it is to be understood that I do not wish to be limited to the details set forth herein, but my invention is of the full scope of the appended claims.

I claim:

1. In a cable anchor device, the combination of: a base, a drum rotatably mounted on the base and having a snubbing surface adapted to receive a plurality of loops of cable, a load-carrying member turnably mounted coaxially of the drum, releasable means for connecting said load-carrying member to move as a unit with said drum, relatively movable clamp jaws tangentially aligned with said snubbing surface, one of the jaws being fixed relative to said load-carrying member, means engaging the other jaw for clamping a portion of the cable between said jaws against movement, and load measuring means operatively interposed between said load-carrying member and said base and having a part subjected to force proportional to the torque load on said drum.

2. In a cable anchor device, the combination of: a base, a drum rotatably mounted on the base and having a tapered snubbing surface adapted to receive a plurality of loops of cable, a load-carrying member turnably mounted coaxially of the drum, releasable means for connecting said load-carrying member to move as a unit with said drum, relatively movable clamp jaws tangentially aligned with said snubbing surface at the large end of the taper, one of the jaws being fixed relative to said load-carrying member, means engaging the other jaw for clamping a portion of the cable between said jaws against movement, and load measuring means operatively interposed between said load-carrying member and said base and having a part subjected to force proportional to the torque load on said drum.

3. In a cable anchor device, the combination of: a base, a drum rotatably mounted on the base and having a snubbing surface adapted to receive a plurality of loops of cable, a load-carrying member turnably mounted coaxially of the drum, releasable means for connecting said load-carrying member to turn as a unit with said drum, relatively movable clamp jaws tangentially aligned with said snubbing surface, one of the jaws being fixed relative to said load-carrying member, means engaging the other jaw for clamping a portion of the cable between said jaws against movement, and a hydraulic pressure capsule operatively interposed between said load-carrying member and said base and having an internal fluid body subjected to pressure proportional to the torque load on said drum.

4. In a cable anchor device, the combination of: a base, a drum rotatably mounted on the base and having a tapered snubbing surface adapted to receive a plurality of loops of cable, a ring turnably mounted upon the drum coaxially thereof and having a torque arm thereon, means including a removable pin for selectively connecting said ring to turn as a unit with said drum, relatively movable clamp jaws tangentially aligned with said snubbing surface at the large end of the taper, one of the jaws being fixed relative to said torque arm, means engaging the other jaw for clamping a portion of the cable between said jaws against movement, and a hydraulic pressure capsule having a first part connected to the base and a second part connected to said torque arm, said first and second parts defining between them an internal fluid body subjected to pressure proportional to the torque load on said drum.

5. In a cable anchor device, the combination of: a base, a drum rotatably mounted on the base and having a snubbing surface adapted to receive a plurality of loops of cable, a load-carrying member turnably mounted coaxially of the drum, releasable means for connecting said load-carrying member to move as a unit with said drum, relatively movable clamp jaws tangentially aligned with said snubbing surface, one of the jaws being fixed relative to said load-carrying member, means engaging the other jaw for clamping a portion of the cable between said jaws, said means including brake means operable upon release of said connecting means to apply a friction drag to the cable as it moves onto the rotating drum, and load measuring means operatively interposed between said load-carrying member and said base.

6. In a cable anchor device, the combination of: a base, a drum rotatably mounted on the base and having a tapered snubbing surface adapted to receive a plurality of loops of cable, a load-carrying member turnably mounted coaxially of the drum, releasable means for connecting said load-carrying member to move as a unit with said drum, relatively movable clamp jaws tangentially aligned with said snubbing surface at the large end of the taper, one of the jaws being fixed relative to said load-carrying member, means engaging the other jaw for clamping a portion of the cable between said jaws. said means including a brake lever operable upon release of said connecting means to apply a friction drag to the cable as it moves onto the rotating drum, and a hydraulic pressure capsule operatively interposed between said load-carrying member and said base.

7. In a cable anchor device, the combination of: a base, a drum rotatably mounted on the base and having a snubbing surface adapted to receive a plurality of loops of cable, a ring turnably mounted upon the drum coaxially thereof and having a torque arm, releasable means including a retractable pin for connecting said ring to turn as a unit with said drum, relatively movable clamp jaws tangentially aligned with said snubbing surface, one of the jaws being fixed relative to said torque arm, means engaging the other jaw for clamping a portion of the cable between said jaws, said means including a brake lever operable upon release of said retractable pin to apply a friction drag to the cable as it moves onto the rotating drum, and a hydraulic pressure capsule operatively interposed between said load-carrying member and said base and having an internal fluid body subjected to pressure proportional to the torque load on said drum, when said pin is engaged.

8. In a cable anchor device of the type described, the combination of: a base, a drum rotatably mounted on the base and having a snubbing surface adapted to receive a plurality of loops of cable, a load-carrying member turnably mounted coaxially of the drum, releasable means for connecting said load-carrying member to move as a unit with said drum, clamp means on the load-carrying member to clamp the cable, brake means on the load-carrying member operable upon disengagement of said clamp means to apply a friction drag to the cable as it moves onto the rotating drum, and load measuring means interposed between said load-carrying member and said base confining a fluid body under pressure proportional to the torque load applied by the cable to the drum.

9. In a cable anchor device of the type described, the combination of: a base, a drum rotatably mounted on the base and having a snubbing surface adapted to receive a plurality of loops of cable, a load-carrying member turnably mounted coaxially of the drum, releasable means for connecting said load-carrying member to move as a unit with said drum, clamp means on the load-carrying member to clamp the cable, brake means including a lever pivotally mounted on the load-carrying member and operable upon disengagement of said clamp means to apply a friction drag to the cable as it moves onto the rotating drum, and a hydraulic pressure capsule interposed between said load-carrying member and said base and acting to limit relative movement therebetween,

said capsule containing a fluid body subjected to a pressure proportional to the torque load applied by the cable to the drum.

10. In a cable anchor device of the type described, the combination of: a base, a drum element having a snubbing surface adapted to receive a loop of cable, a torque arm element, means rotatably supporting the said elements on said base for independent co-axial turning movement, releasable means for engaging said elements in non-rotative relation with respect to each other, clamp means positioned tangentially of the snubbing surface of said drum element on said torque arm element to clamp the cable, brake means operable upon disengagement of said releasable means and said clamp means to apply a friction drag to the cable as it moves onto the rotating drum, and force measuring means interposed between the base and the torque arm element to measure the pull on the cable when the two elements are engaged as a unit and the cable is clamped by said clamp means.

11. In a cable anchor device of the type described, the combination of: a base, a drum element having a snubbing

surface adapted to receive a loop of cable, a torque arm element, means rotatably supporting the said elements on said base for independent co-axial turning movement, releasable means for engaging said elements in non-rotative relation with respect to each other, clamp means positioned tangentially of the snubbing drum surface on said torque arm element to clamp said cable, brake means including a lever operable upon disengagement of said releasable means and said clamp means to apply a friction drag to the cable as it moves onto the rotating drum, and force measuring means interposed between the base and the torque arm element to measure the pull on the cable when the two elements are engaged as a unit and the cable clamped by said clamp means.

References Cited in the file of this patent

UNITED STATES PATENTS

Re. 24,092	Decker	Nov. 22, 1955
2,488,070	Spalding	Nov. 15, 1949
2,807,957	Decker	Oct. 1, 1957