March 30, 1948. P. L. SPENCER 2,438,721

METHOD OF SEALING ELECTRICAL DISCHARGE TUBES

Filed Dec. 4, 1941

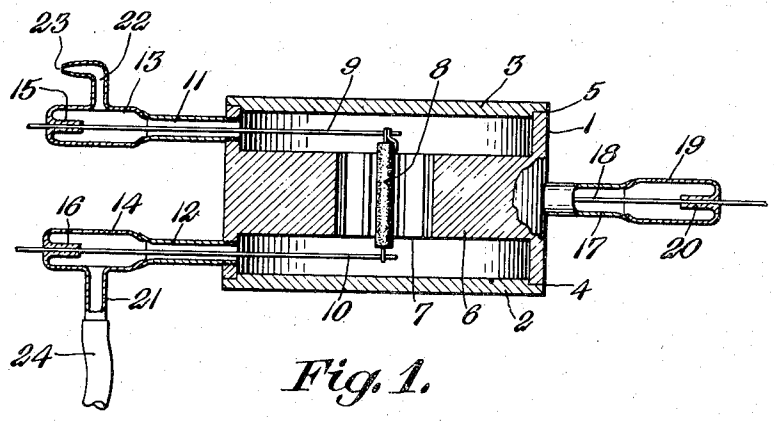

Fig. 1.

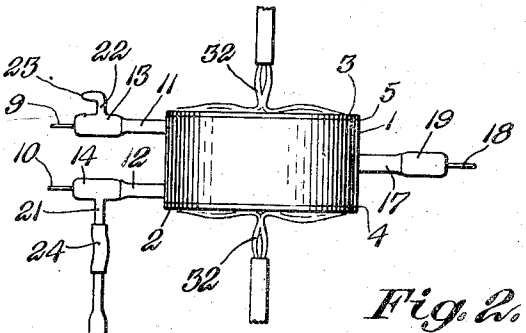

Fig. 2.

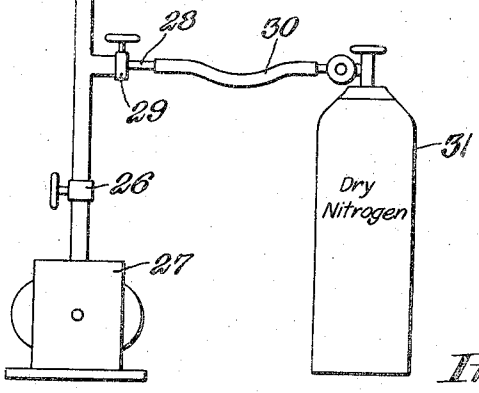

Inventor:
Percy L. Spencer
by Elmer J. Gorn
Attorney

Patented Mar. 30, 1948

2,438,721

UNITED STATES PATENT OFFICE

2,438,721

METHOD OF SEALING ELECTRICAL DISCHARGE TUBES

Percy L. Spencer, West Newton, Mass., assignor to Raytheon Manufacturing Company, Newton, Mass., a corporation of Delaware

Application December 4, 1941, Serial No. 421,668

4 Claims. (Cl. 113—112)

1

This invention relates to a method of hermetically sealing by means of heat component parts of the metal envelope, particularly of an electrical discharge tube. Certain types of electrical discharge tubes are made with a metal envelope of a conductor, such as copper. During the construction of such tubes, component parts thereof are hermetically sealed by the use of suitable solder, such as silver solder. Heretofore difficulties have arisen in connection with such a procedure, due to the fact that various deleterious compounds were formed in the tube, the solder could not readily be made to flow in such a way as to insure a complete hermetic seal at all points, and also because of various other factors.

An object of this invention is to seal tubes of the above type without the introduction of deleterious compounds.

Another object is to produce complete hermetic sealing in a reliable manner.

A further object is to make such a sealing process easier to carry out and more dependable in its results.

The foregoing and other objects of this invention will be best understood from the following description of an exemplification thereof, reference being had to the accompanying drawing, wherein:

Fig. 1 is a cross-sectional view of a tube in which my novel process may be carried out; and

Fig. 2 is a diagrammatic representation of a system for practising my invention in connection with the tube of Fig. 1.

The tube illustrated in Fig. 1 consists of a metal envelope 1 of some conducting metal, such as copper, which, for example, may be the anode of a magnetron. The metal envelope 1 is closed at its ends by end caps 2 and 3. Joints 4 and 5 exist between the end caps 2 and 3 and the side walls of the metal envelope 1. These joints are hermetically sealed by the use of a suitable solder, such as silver solder. The tube may be provided with a suitable internal structure consisting, for example, of a bridging portion 6 having a central bore 7 wherein is disposed a cathode 8. This cathode may be of the indirectly-heated thermionic type which is provided in its completed form with electron-emitting alkaline earth oxides. These oxides originally are coated on the cathode in the form of a decomposible compound of the alkaline earth metals, such as the carbonates. The cathode 8 is supported in position by a pair of lead-in conductors 9 and 10 which pass from the envelope 1

2

through pipes 11 and 12. These pipes are made of a conducting material, such as copper, and the joints at which they join the envelope 1 are likewise sealed by means of a suitable solder, similarly as with the end caps 2 and 3. To the outer ends of the pipes 11 and 12 are sealed glass chambers 13 and 14. The conductors 9 and 10 pass through glass seals 15 and 16 at the outer ends of said chambers 13 and 14, respectively. Another conducting pipe 17 is also sealed through the wall of the metal envelope 1 by means of solder. This pipe 17 may constitute the electrical connection to the anode of the tube, and surrounds a conductor 18 which forms a high frequency lead from which oscillations generated within the tube may be led to a suitable utilization circuit. To the outer end of the pipe 17 is sealed a glass chamber 19 having a glass seal 20 at one end thereof through which the conductor 18 passes. The chamber 14 is initially provided with a side tube 21 while the glass chamber 13 is provided with a side chamber 22 terminating in a small orifice 23.

It will be seen that the tube as described above is provided with a number of joints which must be sealed together before the tube is made hermetically tight, so that the device may be evacuated in the usual manner. One of the most effective ways of producing this seal is by the use of silver solder, as already described. However, as discussed above, such soldering process has heretofore involved a number of serious difficulties. My novel invention may be practised in connection with the arrangement of parts, as shown in Fig. 2. In this arrangement a flexible tube 24 connects the side tube 21 with the upper end of a pipe 25. This pipe is connected through a stop cock 26 to a high vacuum exhaust pump 27 capable of reducing the gas pressure within the envelope 1 to a very low value. Above the stop cock 26 the pipe 25 is provided with a side arm 28 communicating with said pipe 25 through a stop cock 29. A flexible hose 30 may connect the side arm 28 to a tank 31 which contains dry nitrogen.

The sequence of operations of the arrangement as shown in Fig. 2 is substantially as follows. The stop cock 26 is closed and the stop cock 29 is open, whereupon dry nitrogen from the tank 31 is passed through the tube envelope 1, and escapes through the orifice 23. This flow is permitted to continue for a sufficient time until substantially all of the air originally contained within the envelope 1 has been flushed out and displaced by the dry nitrogen. Thereupon one

or more flames 32 are applied to the metal envelope 1 so as to raise its temperature, and particularly the temperature of the joints to be soldered, to about 750 to 800° C. Since silver solder melts at about 700 to 725° C., the above temperature will cause the solder to flow freely into the crevices to be sealed. During this heating process the dry nitrogen continues to flow.

The use of dry nitrogen in this portion of the sealing process has a number of advantages. Nitrogen is substantially inert with respect to the carbonates of the cathode coating, and has no deleterious effects thereon. When tubes of this kind are later exhausted and the cathode coating is broken down, it has been found that a consistently good thermionic electron emission has been secured. Also nitrogen is a poor heat conductor, and thus does not exert excessive cooling. Therefore it is a relatively easy matter to raise the component parts of the tube to a sufficiently high temperature to secure the free flow of solder into all the joints and crevices, and obtain perfect hermetic sealing. In addition, any nitrogen compounds which tend to be formed with the metal parts of the tube decompose at temperatures below the soldering temperature. For example, copper nitride decomposes at about 300° C. Thus if initially any copper nitride is formed, it breaks down completely during the soldering process.

When the soldering has been completed and while the tube is still in heated condition, the stop cock 29 is closed, the tube 22 is sealed off, and the stop cock 26 is opened. Thereupon the pump 27 evacuates the tube envelope 1 of all the nitrogen at a sufficient rate so that when the temperature of the envelope 1 has fallen to about 300° C., at which copper nitride could be formed, there is insufficient nitrogen in the tube to form any significant amount of such compound.

When the tube envelope 1 is at room temperature, it may be removed from the pumping system and air allowed to reenter the tube. Room temperature is sufficiently low so that no deleterious compounds or other injurious effects are produced on the various component parts of the tube. If desired, instead of allowing air to reenter the envelope 1, the side arm 21 may be sealed off until the tube is ready to be connected to the usual exhaust system in which the tube is treated to the usual final exhaust processes.

I have found that tubes sealed in the manner as described above are consistently good, not only as to being completely hermetically sealed but also as to the electrical characteristics thereof, due primarily to the fact that the tube is kept free of deleterious compounds and other deleterious effects during the sealing process.

Of course it is to be understood that this invention is not limited to the particular details as described above as many equivalents will suggest themselves to those skilled in the art. For example, other gases, any compounds thereof which tend to form with component parts of the tube decomposing below sealing temperature, may be used, particularly if such gases have a heat conductivity of the order of nitrogen or less. Also the process may be applied to a wide variety of tube types in which the envelope itself may not necessarily be mainly of metal as long as there are parts which are to be sealed together by heating to relatively elevated temperatures. Various other ideas as to the utilization of various aspects of my invention will readily suggest themselves to those skilled in the art. It is accordingly desired that the appended claims be given a broad interpretation commensurate with the scope of the invention within the art.

What is claimed is:

1. The method of sealing an electrical discharge tube having a plurality of component copper-containing parts which are to be sealed together, said method comprising soldering said parts together at a soldering temperature above about 300° C. while maintaining in said tube an atmosphere of nitrogen, and exhausting said tube while said parts are above about 300° C.

2. The method of sealing an electrical discharge tube having a plurality of component copper-containing parts which are to be sealed together, said method comprising passing through said tube while cold a stream of nitrogen, soldering said parts together at a soldering temperature above about 300° C. while maintaining in said tube an atmosphere of nitrogen, and exhausting said tube while said parts are above about 300° C.

3. The method of sealing an electrical discharge tube having a plurality of component copper-containing parts which are to be sealed together, said method comprising soldering said parts together at a soldering temperature above about 300° C. while maintaining in said tube an atmosphere of nitrogen, cooling said parts below said soldering temperature, and exhausting said tube before said parts have fallen to a temperature of about 300° C.

4. The method of sealing an electrical discharge tube having a plurality of component copper-containing parts which are to be sealed together, said method comprising passing through said tube while cold a stream of nitrogen, soldering said parts together at a soldering temperature above about 300° C. while maintaining in said tube an atmosphere of nitrogen, cooling said parts below said soldering temperature, and exhausting said tube before said parts have fallen to a temperature of about 300° C.

PERCY L. SPENCER.

REFERENCES CITED

The following references are of record in the file of this patent:

UNITED STATES PATENTS

Number	Name	Date
2,023,354	Cope	Dec. 3, 1935
2,093,814	Mann	Sept. 21, 1937
2,095,807	Gier	Oct. 12, 1937

FOREIGN PATENTS

Number	Country	Date
503,076	Great Britain	Mar. 27, 1939