June 18, 1929. A. S. KNOWLES 1,717,884

PROCESS OF TREATING TARRY MATTER, HEAVY HYDROCARBON RESIDUES, AND THE LIKE

Filed June 12, 1925

Fig. 1.

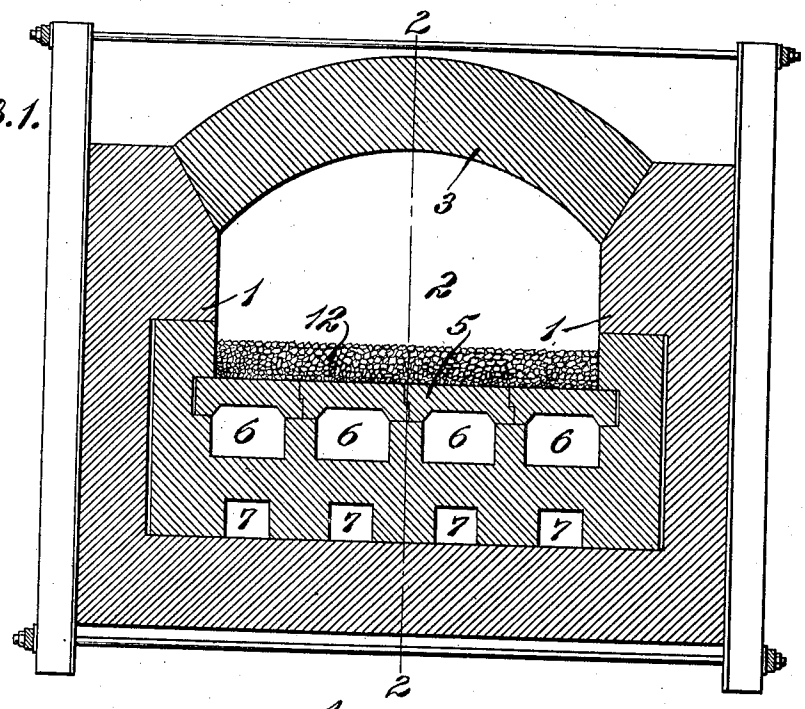

Fig. 2.

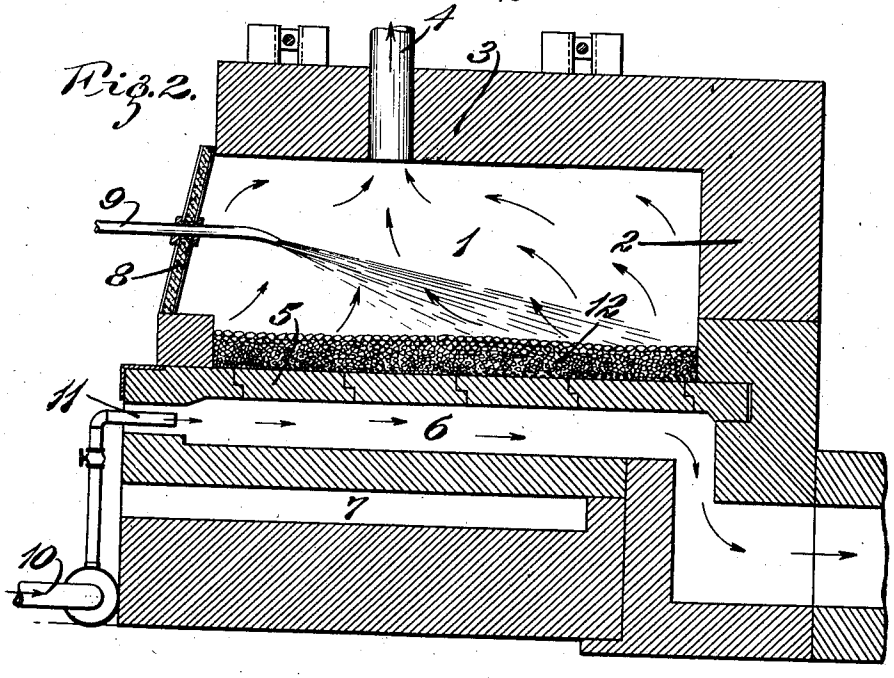

INVENTOR:
Alexander Stephen Knowles,
by Court & Cann,
HIS ATTORNEYS.

Patented June 18, 1929. 1,717,884

UNITED STATES PATENT OFFICE.

ALEXANDER STEPHEN KNOWLES, OF ST. LOUIS, MISSOURI, ASSIGNOR TO TAR & PETROLEUM PROCESS COMPANY, OF CHICAGO, ILLINOIS, A CORPORATION OF ILLINOIS.

PROCESS OF TREATING TARRY MATTER, HEAVY HYDROCARBON RESIDUES, AND THE LIKE.

Application filed June 12, 1925. Serial No. 36,718.

Coal tar is produced as a by-product in the manufacture of gas or coke; and a similar by-product or residue is produced in the distillation and cracking of petroleum, and like matter sometimes occurs as a natural product. Such materials may be viscous or semi-solid and they do not yield readily to economical and satisfactory cracking or distilling operation. For instance, coal tar, as produced in the manufacture of coke or gas, contains water, and when the water content ranges above two percent as it frequently does, the attempt to eliminate the water by distillation of a considerable body of tar is slow and difficult and is liable to produce disastrous fires and explosions, due to the steam being trapped and superheated in the viscous mass.

The principal objects of the present invention are: to produce a safe and economical process of dehydrating such tar-like matter to produce a safe and economical process of cracking such matter into lighter products, and to produce a safe and economical process of fractionally distilling such matter. The invention consists principally in maintaining, on the heated floor of a suitable chamber, a bed of nonvolatile mineral matter, such, for instance, as coke or anthracite coal and injecting the tar-like matter into said chamber at a rate slow enough to prevent the accumulation of a body of liquid therein; and it also consists in the operations hereinafter more fully described and claimed.

In the accompanying drawing forming part of this specification and wherein like reference symbols refer to like parts wherever they occur,

Fig. 1 is a cross-section of an oven or retort apparatus suitable for use in my process; and

Fig. 2 is a longitudinal vertical sectional view thereof on the line 2—2 of Fig. 1.

The oven or retort shown in the accompanying drawing comprises an enclosed chamber which has blank or imperforate walls at its sides 1 and rear end 2 and an arched roof or top 3 which has an outlet 4 for vapors, which outlet communicates with suitable receivers and preferably contains a suitable suction device (not shown). The floor 5 of the oven or retort is preferably flat. This floor has no vertical openings therethrough, but it has a series of heating flues 6 extending from front to rear thereof adapted to receive the products of combustion from a suitable furnace and to deliver them to a suitable stack. The floor also preferably has a series of cooling flues 7 arranged longitudinally below the heating flues. The oven has an opening at the front and is provided with a suitable closure therefor. As illustrated, the oven or retort floor extends forwardly beyond the chamber and on it is built a door 8 of brick secured removably in a permanent frame. Said door or closure has an opening through which extends a feed pipe 9 that is arranged to be rotated and moved back and forth by an attendant. Said pipe terminates in a suitable nozzle, whereby the operator can spray the material to be treated over the entire surface of the loose bed of material hereinafter mentioned. The drawing illustrates the oven as heated by gas or oil fuel fed by a pipe 10 from a suitable source of fuel supply to a suitable burner, or burners 11, in the flues 6.

Prior to closing the door, the floor of the oven is covered with a loose or porous bed 12 of nonvolatile matter such as charcoal, coke or anthracite coal. So long as the bed remains loose or porous and thick enough to protect the floor from the deposition thereon of carbon, the size of the lumps and the thickness of the bed may be varied considerably, as will be apparent from what follows hereinafter.

After the floor has been covered with the bed of loose nonvolatile material and the door closed to exclude the air, the oven floor is heated until the bed reaches a suitable temperature, which will vary according to the material and the purpose of the operation. Ordinarily, a bright red heat is sufficient. When the bed of loose material has reached a suitable temperature, the tar-like matter is injected into the oven or retort through the spray pipe or other suitable means, which delivers it in a finely divided state. Preferably the tar-like matter is first heated sufficiently to make it fluid and it is then injected into the oven in a more or less continuous stream whose rate of flow does not materially exceed the capacity of the fur-

nace for continuously volatilizing or cracking the tar-like matter fed into the oven. During this operation, the suction device in the condensing system with which the outlet pipe communicates, is in operation to keep the pressure inside of the oven low and to facilitate the delivery of the distillation products to the condensing system.

In consequence of the tar-like matter being fed into the oven or retort at a rate slow enough to prevent any substantial accumulation of such matter in liquid form, the changes and reactions that such material undergoes are effected almost instantaneously and the resulting products are immediately removed from the retort. Whatever carbon is deposited is deposited on the lumps or fragments, which constitute the loose bed and which thereby save the floor of the oven or retort from the deposition of carbon thereon. When the deposition of carbon or other matter has proceeded far enough to substantially affect the looseness or porosity of the bed, the operation is discontinued, the front door of the oven or retort is opened or removed and the old bed, or a part thereof, is removed and replaced with a fresh bed.

In consequence of the small mass of matter undergoing treatment at any particular time, the danger of explosions due to the trapping of steam or vapor in a viscous mass is entirely eliminated, and the operation of dehydrating is rendered safe, easy and economical.

Most of the physical and chemical changes are effected when the matter first touches the heated bed on the floor of the oven, or even before. Such actions are endothermic and tend to lower the temperature of the top of the bed. If the rate of feed is too rapid to keep the top of the bed sufficiently heated, the tar-like matter tends to flow downwardly in liquid form along the sides of the lumps, but as the heat in the bed increases progressively downwardly all or part of such liquid matter undergoes volatilization or reaction before it reaches the floor of the oven or retort. The fact that the heat of the bed increases downwardly makes it easy for the operator to control the reactions and products. For instance, the matter to be treated may contain ingredients that volatilize or undergo reaction at relatively low temperature and other ingredients that volatilize or undergo reaction at a higher temperature. With such matter, the ingredients that require the least heat for volatilization or reaction undergo volatilization or reaction immediately on contact with the top of the bed (or even without contact) thereby cooling the top of the bed and permitting the remaining ingredients to flow downwardly past the top of the layer thus cooled by endothermic action. However, such ingredients are flowing toward a hotter zone, and, if the bed is deep enough, and if the heating of the retort is continuous and efficient, they undergo volatilization or reaction before reaching the floor.

For the treatment of materials containing a large percentage of heavy pitchy residual matter, it is preferable to use a bed of relatively large lumps so as to provide adequate surface of contact for the liquid and for the deposition of carbon and to afford adequate passageway for the escape of vapors through the bed. For residues of this character, a higher degree of temperature would be used for economic operation than would be necessary for distillation of lighter material containing a small percentage of pitchy matter.

In the distillation of material containing little or no pitchy residue, such as the fractions already obtained by previous distillation, a bed made of smaller lumps may be used. If a higher temperature is maintained it will result in a more rapid recovery of the products because of the less heat required to distill the lighter material. In every case, however, the rate of input of material to be distilled must be gauged by, or depends on, the amount of heat entering the bed. That is, the heat input and rate of injection of material must be maintained in a balanced operation to secure continuous and satisfactory results.

A retort designed to treat only the lighter material containing little or no pitchy matter, preferably should be metal lined with a metal door, to more completely exclude the air and to allow a pressure to develop in the retort. Such a retort would not need the suction device mentioned above.

It is understood that the retort may be of any suitable size and shape to accommodate the bed of material, and it may be provided with recuperators or regenerators for increasing the capacity of the plant and for economy in the use of fuel.

The material for the bed may be varied according to the purpose and the kind of material that is available in different locations. Such materials as coke, charcoal and anthracite are especially valuable, however, because they not only retain their original fuel value throughout the operation, but have such fuel value increased by the deposit thereon of carbon and other combustible residuum.

The products recovered are coke or carbon, which is deposited in the bed, oils that pass out and may be separated by condensation, and gas,—the amount of which depends on the temperature maintained and the character of the material distilled.

While it is usually preferable to inject the matter to be treated into the chamber in the form of liquid, it is sometimes preferable to inject it in solid form, particularly such substances as pitch and other solid residues

which may be fed onto the bed in lumps of any convenient size. Obviously also the process admits of considerable variation without departing from my invention.

What I claim is:

1. The process of treating heavy hydrocarbon matter in liquid form which comprises depositing the same onto and allowing the same to flow downwardly into a bed of loose material which is mostly carbon, within a closed chamber while heating said chamber externally from below so as to maintain at least a portion of said bed that is below the top thereof in contact with said matter at a coking temperature, removing the gases and vapors from the zone of coking temperature upwardly through the portion of the bed thereabove and removing the solid residue as coke.

2. The process of treating heavy hydrocarbon matter in liquid form which comprises depositing the same within a closed chamber onto a bed of loose material which is mostly carbon while heating said chamber externally from below so as to maintain at least a portion of the bed below the top thereof at a temperature sufficient to cause chemical decomposition of said matter, allowing said matter to flow downwardly at least a substantial distance into the zone of decomposition temperature, removing the gases from said zone upwardly through the portion of the bed thereabove, and removing the solid residue as coke.

3. The process of treating heavy hydrocarbon matter in liquid form which comprises depositing the same in divided form onto a thin bed of loose material which is mostly carbon within a closed chamber while heating said chamber externally from below so as to maintain at least a portion of said bed at a temperature sufficient to cause chemical decomposition of the hydrocarbon matter and deposition of carbon on said loose material, allowing the hydrocarbon matter to pass down a substantial distance into said portion of the bed, and removing the gases and vapors upwardly through the portion of the bed thereabove.

4. The process of treating heavy hydrocarbon matter in liquid form which comprises depositing the same in divided form onto a thin bed of loose material which is mostly carbon within a closed chamber while heating said chamber externally from below so as to maintain at least a portion of said bed at a temperature sufficient to cause chemical decomposition of the hydrocarbon matter and deposition of carbon on said loose material, allowing the hydrocarbon matter to pass down a substantial distance onto said portion of the bed, removing the gases and vapors upwardly through the portion of the bed thereabove and periodically stopping the deposition of said matter and removing said loose material with carbon deposited thereon when its looseness becomes substantially reduced by the deposition of the carbon thereon.

5. The process of treating heavy hydrocarbon matter in liquid form, which comprises depositing said matter throughout a vertical column in a closed chamber at such rate as to prevent accumulation of a substantial body of liquid in said chamber, and exposing the liquid to heat supplied from below sufficient to volatilize a portion thereof and to coke the residue of the liquid, the volatilized matter passing upward from the material in the process of coking, through liquid deposited thereabove, the treatment of upper portions of the material being carried on partly by sensible heat carried by the volatiles released from lower portions.

Signed at St. Louis, Missouri, this 10th day of June, 1925.

ALEXANDER STEPHEN KNOWLES.