United States Patent

[11] 3,597,793

[72] Inventors Gerhard H. Weiler
Des Plaines;
Henry Komendowski, Evanston, both of, Ill.

[21] Appl. No. 828,589
[22] Filed May 28, 1969
[45] Patented Aug. 10, 1971
[73] Assignee Automatic Liquid Packaging, Inc.
Elk Grove Village, Ill.

[54] BOTTLES AND THE METHOD AND APPARATUS FOR FORMING THEM
20 Claims, 43 Drawing Figs.

[52] U.S. Cl. ..... 18/5 BF, 18/5 BM
[51] Int. Cl. B29c 1/00
[50] Field of Search ..... 18/5 BF, 5 BM, 5 BZ

[56] References Cited

UNITED STATES PATENTS

3,325,860	6/1967	Hansen	18/5 BF
3,330,006	7/1967	Jenkins	18/5 BZ

Primary Examiner—Gil Weidenfeld
Attorney—Dominik, Knechtel & Godula

ABSTRACT: Improved methods and apparatus are disclosed for blowing, filling and hermetically sealing bottles having end closures such as caps which can be easily removed and thereafter used to reclose or reseal the bottles.

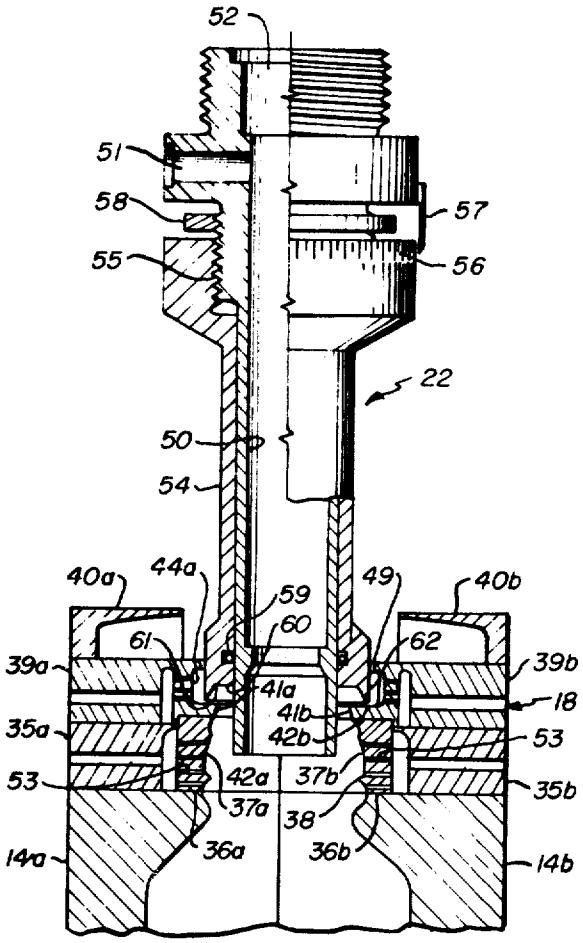

FIG. 1

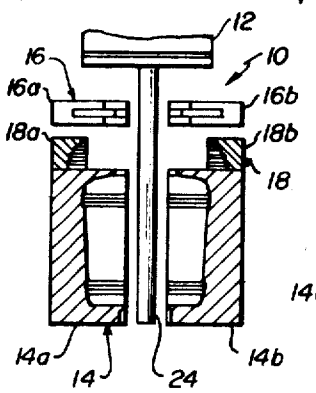

FIG. 2

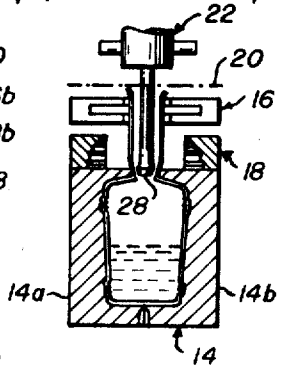

FIG. 3

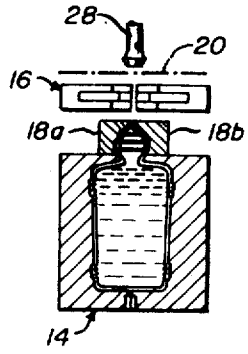

FIG. 4

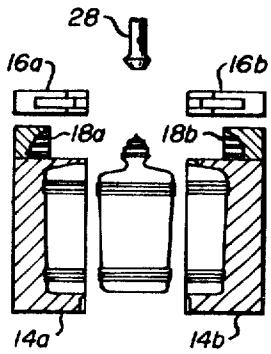

FIG. 5

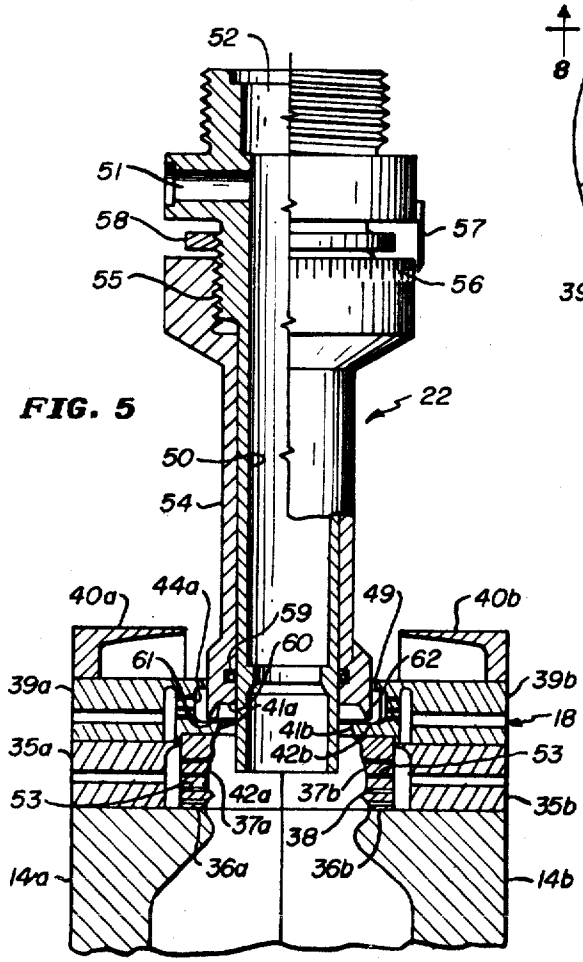

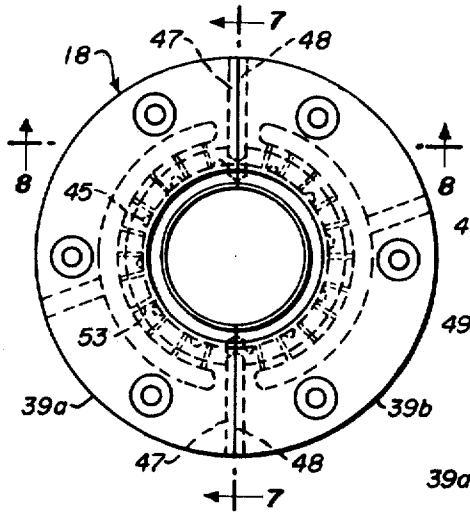

FIG. 6

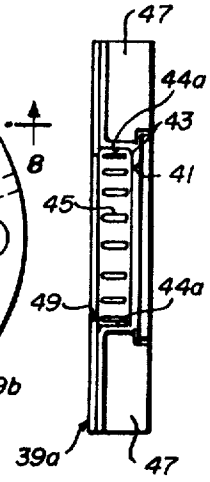

FIG. 7

FIG. 8

INVENTORS
Gerhard H. Weiler
Henry Komendowski
BY
Dominik, Knechtel & Godula
Attys.

FIG. 9

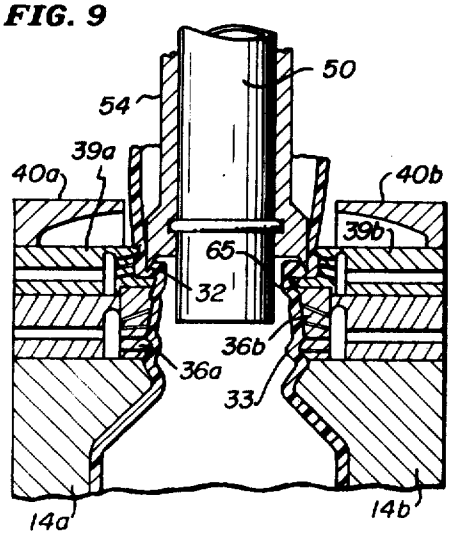

FIG. 10

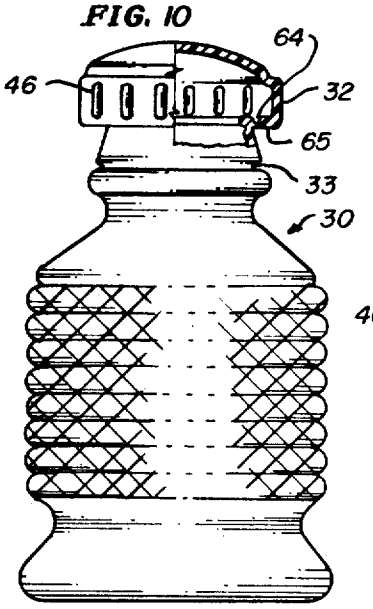

FIG. 11

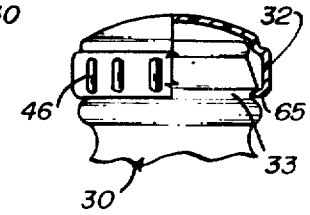

FIG. 14

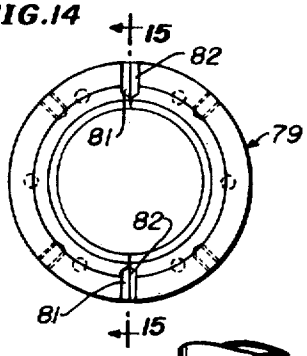

FIG. 15

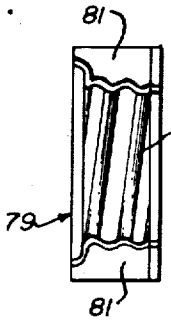

FIG. 16

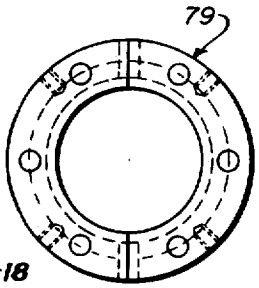

FIG. 12

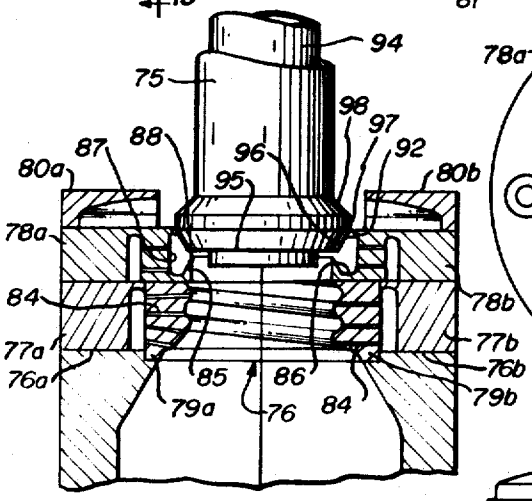

FIG. 17

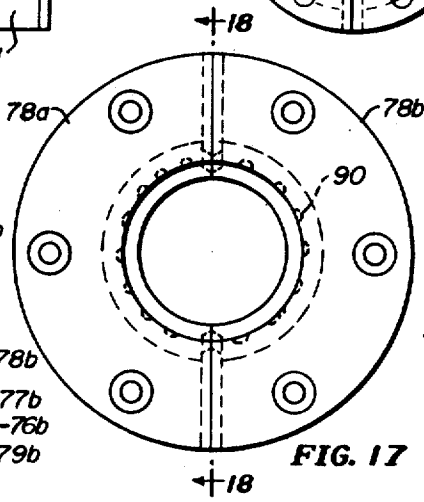

FIG. 18

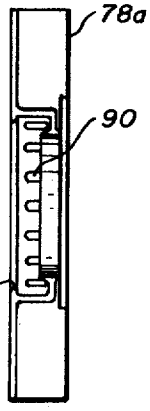

FIG. 13

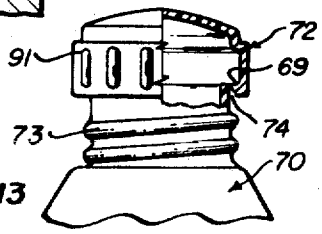

INVENTORS
Gerhard H. Weiler
BY Henry Komendowski
Dominik, Knechtel & Godula
Attys.

FIG. 19

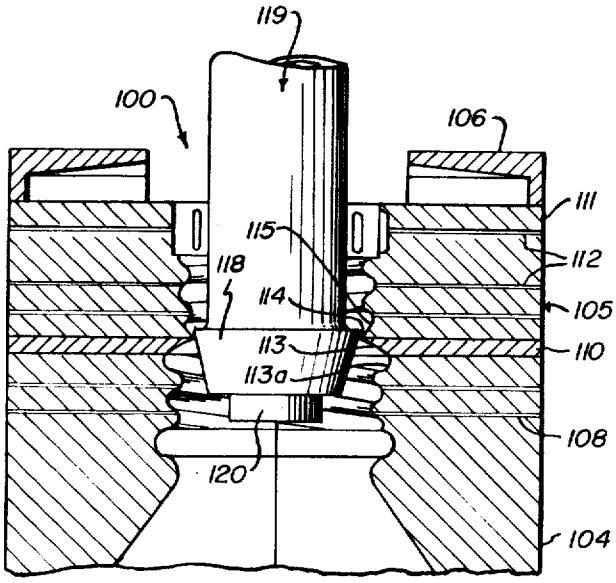

FIG. 20

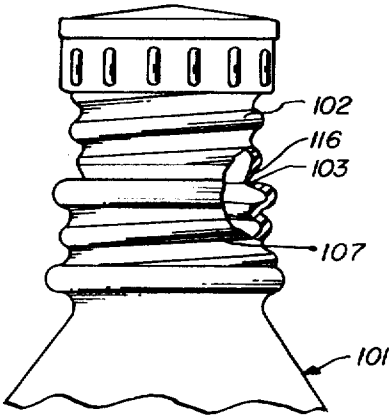

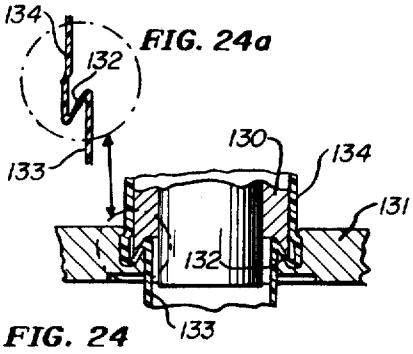

FIG. 24a

FIG. 24

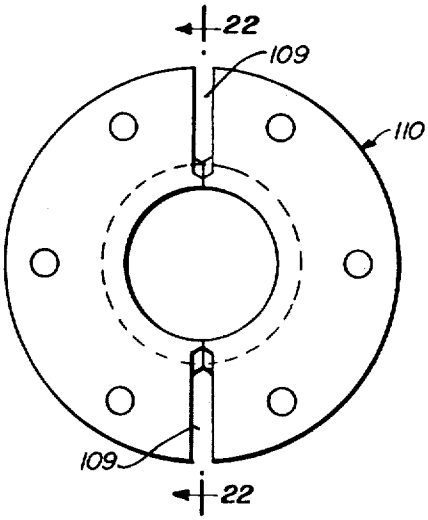

FIG. 21

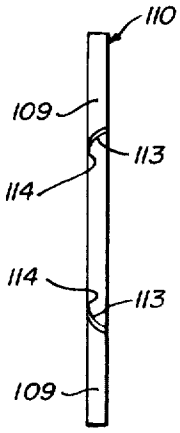

FIG. 22

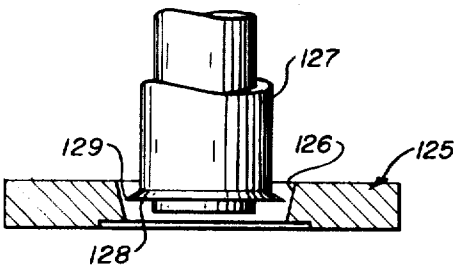

FIG. 23

INVENTORS
Gerhard H. Weiler
BY Henry Komendowski
Dominik, Knechtel & Godula
Attys.

FIG. 25

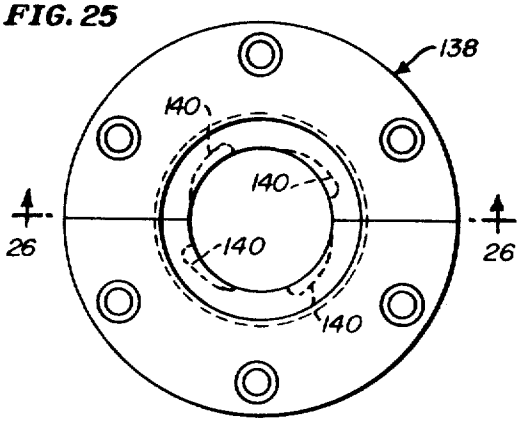

FIG. 27

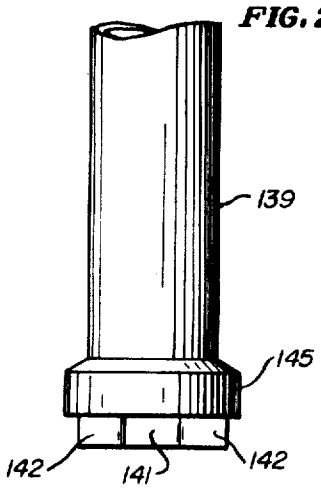

FIG. 26

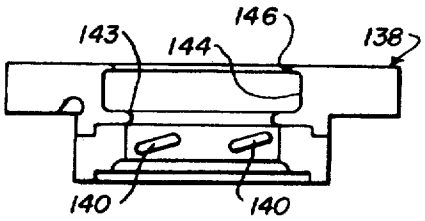

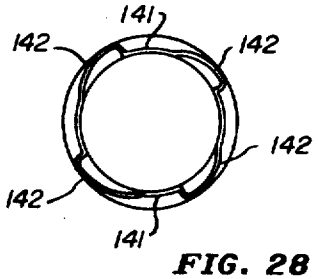

FIG. 28

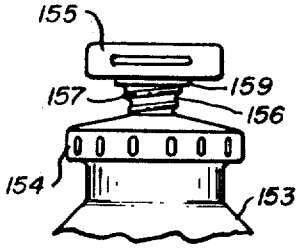

FIG. 31

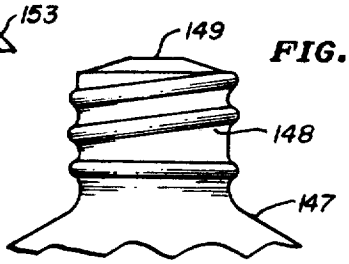

FIG. 29

FIG. 30

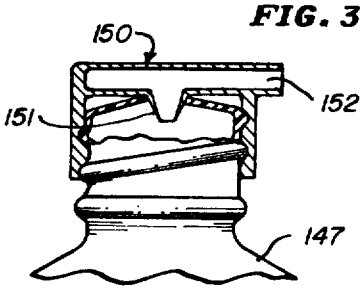

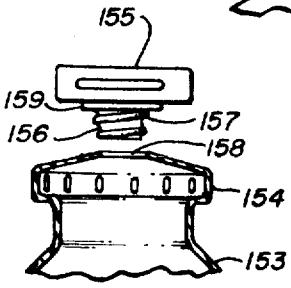

FIG. 32

INVENTORS
Gerhard H. Weiler
Henry Komendowski
BY
Dominik, Knechtel & Godula
Attys.

FIG. 33

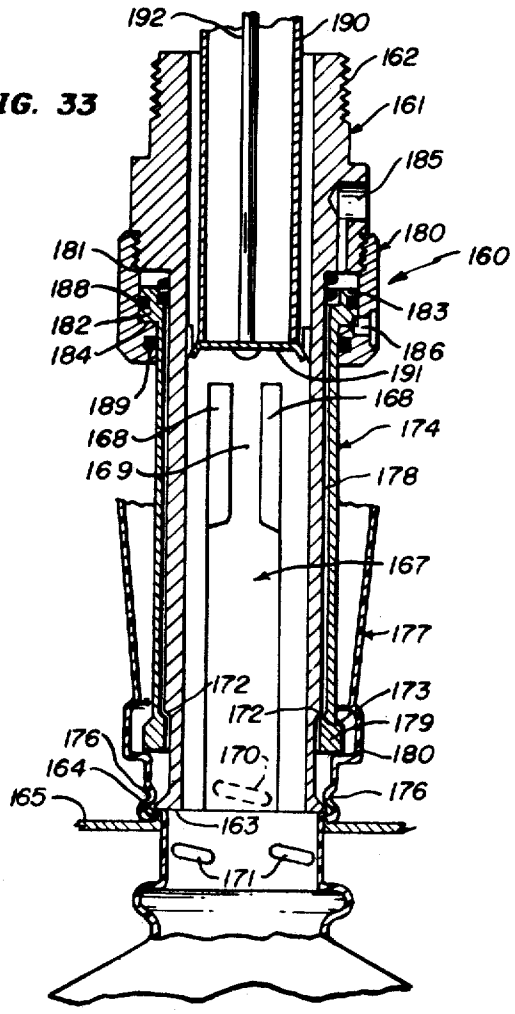

FIG. 38

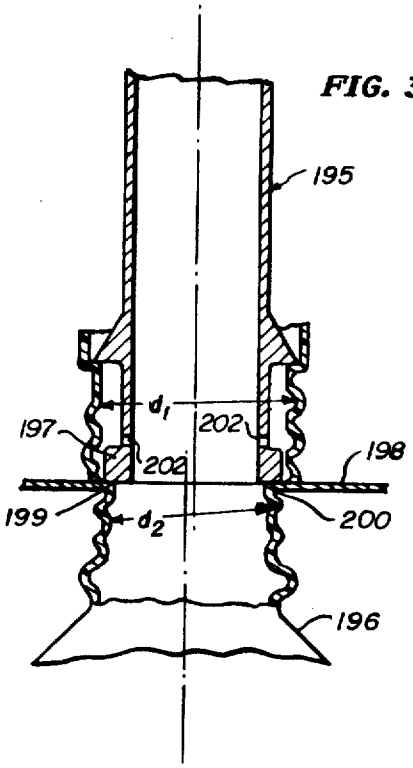

FIG. 34

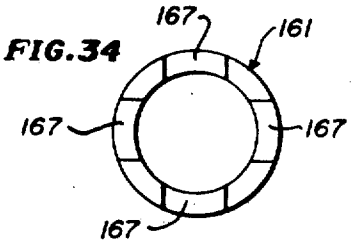

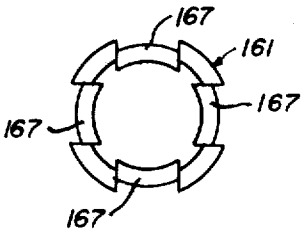

FIG. 35

FIG. 36

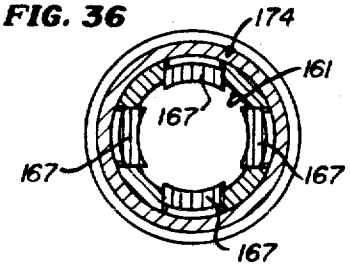

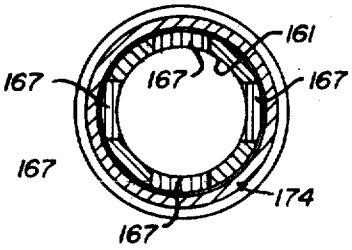

FIG. 37

INVENTORS
Gerhard H. Weiler
Henry Komendowski
BY Dominik, Knechtel & Godula
Attys.

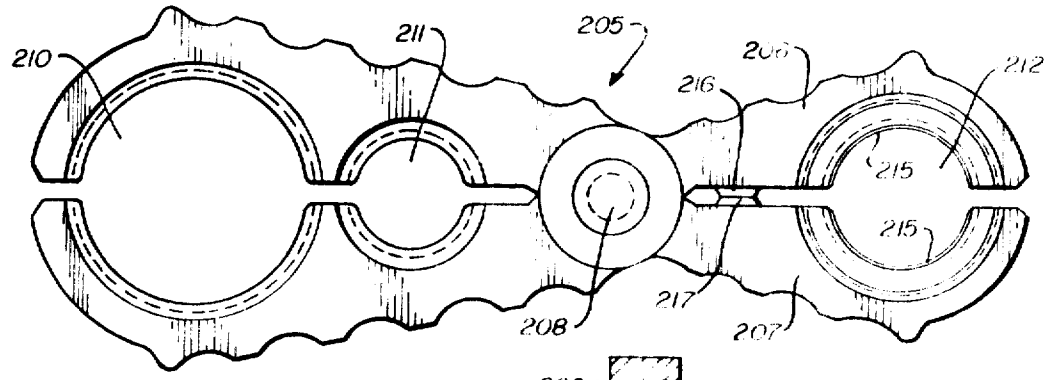

FIG. 39

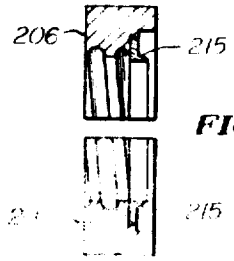

FIG. 40

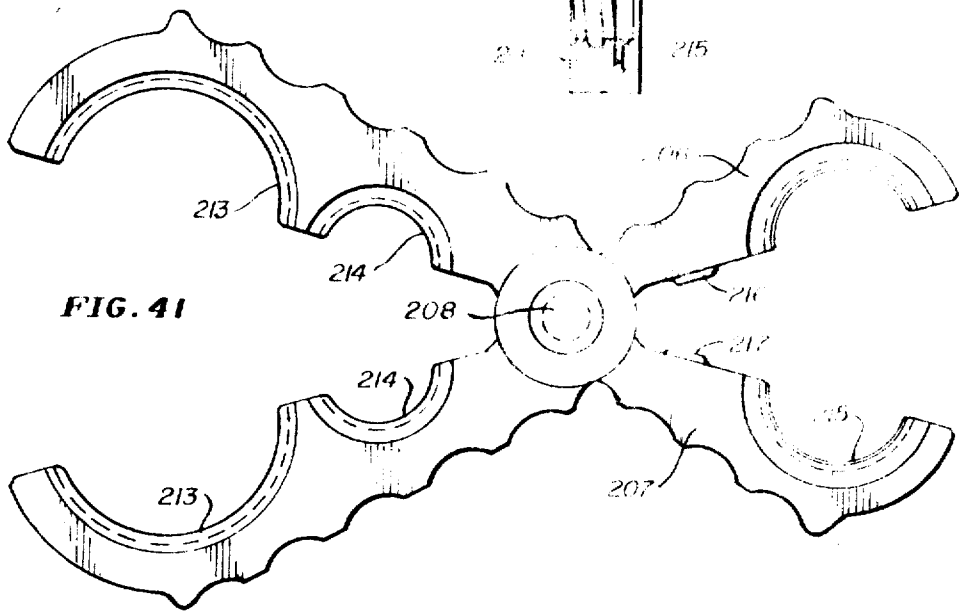

FIG. 41

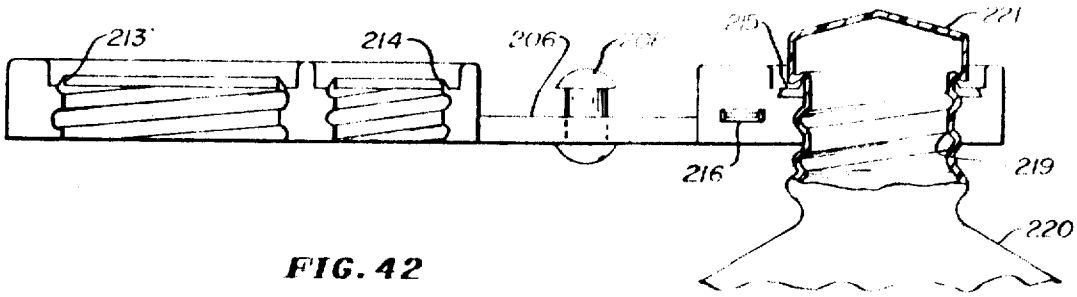

FIG. 42

INVENTORS
Gerhard H Weiler
Henry Komendowski

Dominik, Knechtel & Godulas
Attys

BOTTLES AND THE METHOD AND APPARATUS FOR FORMING THEM

This invention relates to improved methods and apparatus for blowing, filling and hermetically sealing bottles with a single piece of equipment. More particularly, it relates to improved blown bottles and to the methods and apparatus for forming them. These improved blown bottles can be formed with easily removable, integrally formed caps which can be used to reseal the bottles once the latter have been opened.

Many various different types of blown plastic bottles presently are available, however, most of them are hermetically sealed by means of an end closure or cap which is removed by severing it with a knife or the like. Once severed, the bottle remains open since there is no provision made for reclosing or sealing the bottle. Still others have threads integrally formed on a neck portion thereof, and a separate cap is provided for closing or sealing the bottle by threading the cap onto the threaded neck portion. All of these prior arrangements are satisfactory, for one purpose or another. Recently, however, a demand for bottles having integrally formed caps for reclosing or resealing the bottles has occurred. In other words, a demand for a bottle which can be blown, filled and hermetically sealed with an end closure of a type which can be removed and thereafter used to reclose or reseal the bottle once it is opened. The improved bottles of the present invention satisfy this demand.

Accordingly, it is an object of this invention to provide new and improved methods and apparatus for blowing, filling and hermetically sealing bottles, the latter being provided with end closures such as caps which can be easily removed and thereafter used to reclose or reseal the bottles.

Another object is to provide new and improved bottles of the above-described type.

Still another object is to provide improved bottles of the above-described type wherein the end closures are integrally formed therewith during the blowing, filling and hermetically sealing operation.

A still further object is to provide improved methods and apparatus for forming bottles of this last-described type.

In some cases, it is desirable to form these bottles of a substantially strong plastic material which cannot be easily severed to remove the caps integrally formed therewith. Accordingly, still another object is to provide an improved cap removing device for removing the caps in a fashion such as to prevent any of the bottled material from accidentally entering the bottle or the contents thereof, and such that the caps still can be used to reclose the bottle.

For a fuller understanding of the nature and objects of the invention, reference should be had to the following detailed description taken in connection with the accompanying drawings in which:

FIGS. **1—4** are partial sectional views generally illustrating the method of forming, filling and sealing bottles according to the invention;

FIG. **5** is a partial sectional view illustrating the molding apparatus for forming the bottle of FIGS. **10** and **11**;

FIG. **6** is a top plan view of the neck jaw of the molding apparatus of FIG. **5**;

FIG. **7** is a sectional view taken along lines **7–7** of FIG. **6**.

FIG. **8** is a sectional view taken along lines **8–8** of FIG. **6**;

FIG. **9** is a partial sectional view like FIG. **5**, illustrating the hollow tube disposed therein during the forming and filling of the bottle;

FIG. **10** is a side plan view of a bottle formed with the molding apparatus of FIGS. **5** and **9**;

FIG. **11** is a partial view of the top of the bottle of FIG. **10**, illustrating the manner in which its cap can be affixed thereto to reclose it, after the cap is severed;

FIG. **12** is a partial sectional view of molding apparatus adapted to form a cap on a bottle generally of the construction illustrated in FIG. **13**;

FIG. **13** is a partial plan view, partially sectionalized, of a bottle formed with the molding apparatus of FIG. **12**;

FIG. **14** is a top plan view of the neck jaw thread forming insert of the molding apparatus of FIG. **12**;

FIG. **15** is a sectional view taken along lines **15–15** of FIG. **14**;

FIG. **16** is a bottom plan view of the thread forming insert of FIGS. **14** and **15**;

FIG. **17** is a top plan view of the lower cap forming member of the molding apparatus of FIG. **12**;

FIG. **18** is a sectional view taken along lines **18–18** of FIG. **17**;

FIG. **19** is a partial sectional view of molding apparatus adapted to form a bottle of the construction illustrated in FIG. **20**.

FIG. **20** is a partial side plan view of a bottle having a corkscrew-type closure top, the same being formed with the molding apparatus of FIG. **19**;

FIG. **21** is a top plan view of one member of the neck jaw assembly of the molding apparatus of FIG. **19**;

FIG. **22** is a sectional view taken along lines **22–22** of FIG. **21**;

FIG. **23** is a partial view of a mandrel and a neck jaw for forming an annular groove on the interior of a bottle for weakening the latter to permit the cap and said bottle to be severed therefrom;

FIG. **24** is a partial view of still another mandrel and neck jaw for forming an annular angularly disposed flange between the neck portion of a bottle and the cap integrally formed therewith for permitting the latter to be severed from the bottle;

FIG. **24***a* is an enlarged partial sectional view illustrating the flange formed by the apparatus of FIG. **24**;

FIG. **25** is a top plan view of a neck jaw assembly adapted to provide quarter threads on the neck portion of a bottle;

FIG. **26** is a sectional view taken along lines **26–26** of FIG. **25**;

FIG. **27** is a partial side plan view of a mandrel used in conjunction with the neck jaw assembly of FIG. **25**;

FIG. **28** is an end plan view of the mandrel of FIG. **27**;

FIG. **29** is a partial side plan view of a bottle having a threaded, closed neck portion;

FIG. **30** is a partial side plan view, partially sectionalized, of the threaded, closed neck portion of FIG. **29**, illustrating a pour spout type cap affixed to it, the latter being adapted to also open the bottle;

FIG. **31** is a partial side plan view illustrating a bottle having a cap with a twist-off opener affixed to it;

FIG. **32** is a view similar to FIG. **31**; generally illustrating the manner in which the twist-off opener can be used to reclose the bottle;

FIG. **33** is a partial sectional view of a mandrel which can be used to provide quarter threads on the neck portion of a bottle.

FIGS. **34** and **35** are end views of the mandrel of FIG. **33**, illustrating the flexible fingers thereof in an extended and retracted position, respectively;

FIGS. **36** and **37** are sectional views taken along lines **36–36** of FIG. **33**, illustrating the flexible fingers of the mandrel of FIG. **33** in a retracted and an extended position, respectively;

FIG. **38** is a sectionalized partial side view of a mandrel which is axially offset with respect to the axis of the main bottle forming mold;

FIG. **39** is a top plan view of a cap removing device exemplary of the invention;

FIG. **40** is a sectional view of the cap removing device of FIG. **39**, taken along lines **40–40** of FIG. **39**;

FIG. **41** is a top plan view of the cap removing device of FIG. **39**, illustrating the same in an open position; and

FIG. **42** is a side view generally illustrating the manner in which the cap removing device is affixed to a bottle to remove the cap thereon.

Similar reference characters refer to similar parts throughout the several views of the drawings.

Referring now to the drawings, in FIGS. 1—4, there is illustrated apparatus **10** for blowing, filling and hermetically sealing bottles. This apparatus **10** is generally like that disclosed in U.S. Pat. No. 3,325,860 to Gerhard Hansen, and includes an extruder **12**, a two-piece mold **14** including mold halves **14***a* and **14***b*, a holding jaw **16** including jaw halves **16***a* and **16***b*, a head jaw **18** including jaw halves **18***a* and **18***b*, a cutting apparatus **20**, and a composite filling and blow tube **22**. For a full and detailed description of the apparatus **10**, reference can be made to the above-mentioned U.S. Pat. No. 3,325,860. Generally, however, the operation is as follows. A parison in the form of a hollow tube **24** is extruded by the extruder **12**, between the mold halves **14***a* and **14***b*. When the parison or tube **24** is of the required length, the mold halves **14***a* and **14***b* are closed. The lower end of the tube **24** is pinched closed by the mold, and its upper end is positioned and held by the holding jaw **16**, through the application of vacuum applied thereto, and is separated by the cutting apparatus **20**, which may be a heated wire. A mold carriage (not shown) moves the mold **14**, the holding jaw **16** and the head jaw **18** into position for shaping, filling and sealing the bottle.

To fill the bottle, the mandrel **28** of the composite filling, blowing and notching tube **22** moves into the conical neck part **26**, and the hot plastic tube **24** is inflated by a burst of compressed air and pressed against the walls of the mold **14**. At the same time, a precisely metered quantity of the product being bottled fills the bottle via a filling channel (not shown) in the mandrel **28** by a precise metering machine (not shown). The air used for inflating or blowing the bottle is discharged to the outside through an air discharge duct (not shown). As soon as the product hits the plastic walls, the bottle solidifies.

The mandrel **28** is raised, and the jaw halves **18***a* and **18***b* of the head jaw **18** are closed by means of two cylinders (not shown). The head jaw **18** forms and seals the upper bottle head, and thereafter the mold **14**, the head jaw **18** and the holding jaw **16** all open. The filled and hermetically sealed bottles leave the apparatus via a bottle dropout chute (not shown).

The entire operation takes about as much time as the conventional blow molding of an empty plastic bottle, hence it is apparent that numerous advantages are provided. The complete packaging cycle can be kept sterile so that the system can be used in the pharmaceutical industry as well as in other industries to package or bottle items such as fruit juices, edible oils, vinegar, milk, laundry or dishwashing detergents, floor care liquids, cleansers, dyes, machine oils, bubble baths and shampoos, to mention but a few of the whole host of items which can be bottled. Many thermoplastic materials can be used including low and high density polyethylene, including MPE 212 polyethylene produced by Monsanto, polypropylene, polycarbonate acetate, and GEON and ABS, so that virtually any type of flowable product can be packaged or bottled, in a compatible material.

As indicated above, a demand for bottles having integrally formed caps for reclosing or resealing the bottles has developed, which demand probably is due to the wide range of products which now can be packaged or bottled with the above-described apparatus. In FIGS. **10** and **11**, there is illustrated one such bottle **30** having a cap **32** integrally formed thereon, which cap can be removed and thereafter can be snap fitted with an annular recessed groove **33** on the bottle, to reclose or reseal the latter.

The bottle **30** is formed, filled and sealed, in the manner described above, however, a specially designed neck jaw and mandrel is employed, to form the neck portion and the cap of the bottle. As can be seen in FIGS. **5—9**, the mold **14** includes insert halves **35***a* and **35***b*, each of which, for ease of construction, is formed of three members which are affixed together to provide a unitary structure. Obviously, if desired, each of the insert halves can be machined as an integral unit. In this case also, the insert halves **35***a* and **35***b* are removably fixedly secured to respective ones of the mold halves **14***a* and **14***b*, so as to close with the latter when they are closed.

The neck members **36***a* and **36***b* each comprise one-half of an annular ring-shaped bottle neck mold, and the molding surfaces **37***a* and **37***b* thereof are contoured to provide the desired shaped to the neck portion of the bottle **30**. In particular, a substantially pointed annular projecting rib **38** is formed on the molding surfaces **37***a* and **37***b*, which rib **38** provides the annular recessed groove **33** on the neck portion of the molded bottle. The lower cap forming members **39***a* and **39***b* likewise each comprise one-half of an annular ring-shaped mold for forming the lower or body portion of the cap **32** which is integrally formed with the bottle **30**. This lower or body portion ultimately is closed and hermetically sealed by the upper or top cap forming members **40***a* and **40***b* which also comprise one-half of an annular ring-shaped mold for completing the cap **32**, respectively, in a manner described more fully below. These upper or top cap forming members **40***a* and **40***b* are adjustably and slidably affixed to the head jaws **18** *a* and **18***b*, respectively, and are closed independently of the latter by air cylinders or the like (not shown) to complete the cap **32** on the bottle **30**.

The lower cap forming members **39***a* and **39***b* have molding surfaces **41***a* and **41***b* which merge with and constitute an extension of the molding surfaces **37***a* and **37***b*, and molding surfaces **42***a* and **42***b* which form an annular flat, horizontally disposed ledge or shelf **43** that intersects the molding surfaces **41***a* and **41***b* at substantially a right angle. Mold surfaces **44***a* and **44***b* form the sidewalls of the cap **32** and, as can be best seen in FIGS. **6** and **7**, the mold surfaces have recessed elongated cavities **45** formed in them. These cavities **45** provide the serrations **46** (FIG. **10**) on the sidewalls of the cap **32** which permit the cap to be more easily gripped and twisted to remove it.

A number of vacuum ducts **53** preferably are provided in the jaw halves **35***a* and **35***b*, the neck members **36***a* and **36***b*, and the lower cap forming members **39***a* and **39***b* so that vacuum can be used to assist in forming the neck portion and the lower or body portion of the cap **32** during the forming and filling of the bottle **30**. To this end, an annular projecting rib **49** is formed about the mold surfaces **44***a* and **44***b*, at the top edge thereof, to improve vacuum holding and forming. All of the cavities **45** are disposed below this rib **49**, that is, these cavities do not run to the top edge of the mold surfaces **44***a* and **44***b*, so that a generally sealed mold cavity is provided.

The composite filling and blow tube **22**, in this case, includes a spout **50** which is adapted to be vertically raised and lowered, and further has an inlet **51** to which means (not shown) can be affixed for expelling a blast of compressed air into the hollow tube **24** to form the bottle and an inlet **52** to which means (not shown) can be affixed for expelling the product into the blown bottle. The spout **50** also is slidably disposed within a mandrel **54**, and the latter is threadably and adjustably affixed to the spout **50** by means of threads **55** in a fashion such that the mandrel **54** can be vertically adjusted in a micrometerlike fashion, with respect to the spout. Micrometer graduations **56** are provided on the mandrel **54** in functional relationship with a pointer **57** affixed to the spout **50**, so that accurate adjustments can be easily and quickly made. A locknut **58** also is provided for locking the mandrel **54** in a fixed position. An O-ring **59** is provided for sealing, to provide an airtight fit between the spout **50** and the mandrel **54**.

The lower end of the mandrel **54** is sufficiently smaller in diameter than the inside diameter of the rib **49** so that the hollow tube **24** is slightly pinched between the mandrel and the rib **49** to form a seal to improve the vacuum holding and forming of the neck portion and the cap of the bottle **30**. Also, the terminal end of the mandrel **54** has a recessed cavity **60** having a downwardly and outwardly tapered wall **61** formed in it, in a fashion such as to provide a downwardly depending substantially pointed flange **62**. This flange **62** in cooperation with the ledge or shelf **43** provides an annular groove **64** in the interior surface of the inwardly extending lower edge **65** of cap **32**, during the forming of the bottle **30**, as can be best seen in FIGS. **9** and **10**. The mandrel **54** is vertically adjustably posi-

tioned with respect to the ledge 43 to provide a groove 64 of a depth which will permit the cap 32 to be removed by severing it at this groove, upon exerting a simultaneous twisting and lifting motion to the cap. The cap should be relatively easily removed, however, at the same time, the groove 64 should not be such that the seal is easily accidentally broken by dropping or otherwise imposing pressure upon it. The depth of the groove 64 also will vary, depending upon the particular plastic material used. Once the latter is chosen, the depth can be easily determined by running a number of samples and adjusting the mandrel until a satisfactory groove is provided.

It may also be noted that the diameter of the mandrel 54 or, more specifically, that of the flange 62, preferably and advantageously is proportioned so that the inner diameter of the lower edge 65 of the cap, after the latter is severed from the bottle 30, is smaller than the diameter of the neck portion of the bottle at the groove 33. When fashioned or proportioned in this manner, the cap 32 can be snap-fitted to the neck portion by engaging the lower edge 65 of the cap in groove 33, to reseal or reclose the bottle 30, as can be seen in FIG. 11.

In forming, filling and sealing the bottles 30, as indicated above, a parison in the form of a hollow tube 24 is extruded by the extruder 12, between the mold halves 14a and 14b. When the tube 24 is of the required length, the mold halves 14a and 14b are closed. The lower end of the tube 24 is pinched closed by the mold, and its upper end is positioned and held by the holding jaws 16, through the application of vacuum, and is severed by the cutting apparatus 20 In this case, when the mold halves 14a and 14b close, the neck jaw halves 35a and 35b close with them, to partially form the neck portion of the bottle and the cap 32, this latter operation being assisted by the application of vacuum, through the ducts 53. The neck jaw halves 35a and 35b, as can be seen in FIGS. 6—8, have recessed cavities 47 and 48 formed in the abutting edges thereof into which the plastic of the hollow tube 24 can flow or collect when the latter is pinched between them, when the mold halves 14a and 14b close

A mold carriage (not shown) then moves the mold 14 into position, beneath the composite filling, blowing and notching tube 22 which, in this case, includes the spout 50 and the mandrel 54, as illustrated in FIGS. 5 and 9. As the latter are moved vertically downwardly into the top end of the severed tube 24, as can be best seen in FIG 9, the tube 24 is slightly pinched between the mandrel 54 and the rib 49 so as to seal the mold cavity to assist the vacuum forming of the neck portion of the bottle. This action, in combination with the downwardly depending flange 62 embedding into the plastic to form the groove 64, completely seals the interior of the tube 24. The blast of compressed air which is injected into the hollow tube 24 therefore forces or blows the hollow tube 24 so that the latter assumes the shape of the mold cavity in the mold 14. The blown bottle now is filled with the product, via the spout 50, and then the filling and blowing tube 22 is raised to remove it from the open end of the hollow tube 24. The upper or top cap forming members 40a and 40b now are closed, to complete the forming of the cap 32 on the bottle 30. The finished bottle 30 is illustrated in FIG 10, and it can be seen that the cap 32 integrally formed with it hermetically seals the bottle.

To remove the cap 32, the latter is gripped between the fingers and by simultaneously twisting and raising the cap, it can be caused to sever at the groove 64 formed in its lower inwardly extending edge 65. As indicated above, the diameters of this edge 65 where it severs at the groove 64 and that of the groove 33 formed in the neck portion preferably and advantageously are proportioned so that the edge 65 will snap fit into the groove 33 to affix the cap 32 to the bottle 30, to reseal or reclose the bottle.

In FIG. 13, there is illustrated the upper end of another bottle 70 having a cap 72 integrally formed with it, which cap 72 is adapted to be removed and to thereafter be threaded onto the neck portion 73 of the bottle to reseal or reclose it. The cap 72 can be provided with an interior groove like the groove 64 described above, by using a mandrel similar to the mandrel 54 or, alternatively, the cap 72 can be provided with an exterior groove 74, as illustrated. In the latter case, a mandrel 75 and a neck jaw 76 of the type illustrated in FIGS. 12 and 14—18 are used.

The neck jaw 76 likewise comprises jaw halves 76a and 76, each of which, for ease of construction, is formed of a neck forming member 77 and a lower cap forming member 78 affixed together to form a unitary member, however, as in the case of the head jaw 18, they could be formed as integral members, if desired. Also, the neck forming members 77a and 77b preferably are each formed with a thread forming insert 79a and 79b so that the threads provided on the neck portion of the bottle can be easily varied. The neck forming member 77 and the lower cap forming member 78 are removably affixed to the mold 14 so that they open and close with the latter, and upper cap forming members 80a and 80b are adjustably slidably affixed atop the lower cap forming members 78a and 78b. These upper cap forming members 80a and 80b are operated to open and close them, by means of air cylinders or the like (not shown) independently of the mold 14 and the member 77 and 78 affixed to it. Vacuum ducts 84 again are provided to assist in forming the neck portion 73 and the cap 72 on the bottle 70.

The neck forming member 77, or more particularly its thread forming insert 79, as can be best seen in FIGS 14 and 15, is in the form or shape of an annular ring, and the abutting edges thereof have recessed cavities 81 and 82 formed in them for receiving the plastic of the hollow tube 24 pinched between them when the mold 14 is closed. The interior surfaces of the inserts 79 have thread cavities 83 formed in them, which cavities form a continuous thread on the neck portion 73 of the finished bottle as shown in FIG. 13.

The lower cap forming members 78a and 78b have a substantially vertically disposed mold surface 85 which merges and joins with a recessed cavity or groove 86 which in turn flows into another substantially vertically disposed mold surface 87 The arrangement is such as to provide a substantially pointed, upstanding annular flange 88 which functions in conjunction with the terminal flat end of the mandrel 75 to form the groove 74 in the lower edge flange of the cap 72 in the manner described more fully below. As in the case of the lower cap forming member described above, the mold surface 87 has a number of cavities 90 (FIGS. 17 and 18) in it for providing serrations 91 on the rim of the cap 72, and an annular projecting rim 92 for improving the vacuum holding and forming of the cap.

The mandrel 75 has a spout 94 slidably affixed therein as described above, and the mandrel preferably is adapted to be vertically adjustably positioned in a micrometer type fashion with respect to the spout 94 and the edge of the flange 88 The mandrel has a flat surface 95 on its terminal end which cooperates with the flange 88 to form the groove 74 in the cap, and its outer periphery is formed of an outwardly tapering conical surface 96 which flows into a flat surface 97 which constitutes the major diameter of the mandrel The latter surface, in turn, flows into an inwardly tapering conical surface 98. It can be seen, in FIG. 13, that this configuration in combination with that of the lower cap forming member 78 results in a thread receiving groove 69 in the cap 72, for receiving the threads on the neck portion 73 of the bottle 70, so that the cap can be threadably affixed to the bottle after it is severed at the groove 74 The latter is accomplished by simultaneously twisting and lifting the cap 72, until the plastic severs at the groove 74.

As in the above-described operation of the molding apparatus of FIG. 5, after the bottle 70 is blown and filled, the spout 94 and the mandrel 75 are raised to remove them from the open end of the hollow tube 24. Thereafter, the upper cap forming members 80a and 80b are closed, to finish the top of the cap 72.

In FIG. 19, there is illustrated still another molding apparatus 100 which is adapted to form a bottle 101 (partially

shown in FIG. 20) having a corkscrew-type closure top 102. The latter is weakened by means of an annular groove 103 formed at the connection point of the top to the bottle, as best seen in FIG. 20.

The molding apparatus 100 includes a split main mold 104 to which is affixed the respective halves of the sealing mold which includes the neck jaw 105 and the upper cap forming member 106. The sealing mold is slidably adjustably affixed to the main mold 104, so as to be operable independently of the latter to close the top 102, in the manner described above.

The mold 104, in this case, is constructed to form both the bottle 101 and its neck portion 107. Ducts 108 for the application of vacuum to form the neck portion 107 also preferably are provided in the mold 104. The mold 104 has a plate 110 (best seen in FIGS. 21 and 22) affixed to it, and together they function to form the groove 103 and the thread portion of the bottle 101. Vacuum ducts 112 also are preferably provided in the sealing mold, to assist in forming the thread portion of the closure top.

The plate affixed to the mold 104 has a mold surface 113 which merges with the thread forming mold surface in the mold 104 and which tapers inwardly and upwardly so as to form a substantially pointed tip 114. A cavity 113A is provided for plastic to avoid heavy accumulation and obstruction for closure cap entry. The abutting edges of the two halves of the section 110 also are formed to provide cavities 109 for excess plastic pinched between the two halves when the mold closes. The section 111 is formed with similar cavities (not shown). The molding surface 115 of the section 111 of the neck jaw 105 is aligned with the pointed tip 114, and from the lower edge it tapers upwardly and outwardly so as to form a flat, tapered camming surface 116 (FIG. 20) on the lower end of the closure top 102.

The pointed tip 114, of course, extends annularly about the molding surface of the mold 104, and is in spaced relation to the tapered wall 118 of the end of the mandrel 119. The mandrel 119 is adapted to be vertically adjustably positioned with respect to the spout 120 slidably disposed within it, in the manner described above, to adjust the spacing between the wall 118 of the mandrel and the pointed tip 114, to provide a groove 103 of proper depth to permit the closure top 102 to be severed by twisting it. When the hollow tube 24 is pinched between the wall 118 and the pointed tip 114, it also is sealed so that the hollow tube can be blown to form the bottle 101, by the blast of compressed air emitted through the spout.

After the bottle 101 is filled with the product, the mandrel 119 and the spout 120 are vertically retracted from the hollow tube 24. Thereafter, the two halves of the upper cap forming member 106 are closed, to complete the closure top 102 and to hermetically seal the bottle 101.

As indicated above, the closure top 102 is severed from the bottle 101 by twisting it to cause it to sever at the weakened area formed by the groove 103. Once removed, the closure top is adapted to be threaded into the neck portion of the bottle to reclose or reseal it. The camming surface 116 permits the end of the severed closure top 102 to be more easily inserted and initially threaded to affix the top to the bottle.

In FIG. 23, there is shown an alternative construction for the mandrel and the neck jaw, for forming a groove, such as the groove 103, on the interior rather than the exterior of the bottle. In this case, it can be seen that the neck jaw 125 has downwardly and inwardly tapered surface 126, and that the mandrel 127 has an annular flange 128 which tapers downwardly and outwardly to form a pointed tip 129. This pointed tip 129 cooperates with the tapered surface 126 to form a groove at the juncture between the neck portion of a bottle and the closure top in generally the same manner as described above, however, in this case, the groove results in the interior surface.

In FIG. 24, there is illustrated a mandrel 130 and a neck jaw 131 which is a combination of the mandrel 54 of FIG. 5 and the neck jaw 76 of FIG. 12. This combination provides a weakened, angularly disposed flange 132 between the neck portion 133 of a bottle (not shown) and the integrally formed closure top 134, as can be best seen in FIG. 24a which is a partial sectional view of the bottle and the closure top.

In FIGS. 25—28, there is shown a neck jaw 138 and a mandrel 139 which is adapted to form quarter threads on the neck portion of a bottle and on the closure top integrally formed with it, so that the closure top can be threadedly affixed to the bottle to reclose or reseal it. As can be best seen in FIGS. 25 and 26, the neck jaw 138 has a number (four as illustrated) of recessed, angularly disposed, generally rectangular-shaped cavities 140 formed in it. These cavities 140 formed the quarter threads on the neck portion of the bottle.

The terminal end 141 of the mandrel 139, as can be seen in FIGS. 27 and 28, is formed with a corresponding number of shaped flanges 142 which, in combination with the ledge 143 and the molding surface 144 of the neck jaw 138 provide quarter threads on the closure top. These quarter threads, when the closure top is resecured to the bottle, engage and interlock with the quarter threads on the neck portion of the bottle, in a fashion such that the closure top is lockingly engaged with the bottle and its top wall is forcibly urged in sealing engagement with the upper end of the neck portion. The enlarged diameter portion 145 of the mandrel 139 cooperates with the annular rim 146 on the molding surface 144 to form a vacuum chamber, for reasons set forth above.

In FIGS. 29 and 30, there is shown the upper end of a bottle 147 having a threaded neck portion 148 and a closed hermetically sealed top wall 149 which is adapted to be opened by means of a pour spout type cap 150. The cap 150 is adapted to be threaded onto the neck portion 148, and it has a conical shaped puncturing nozzle 151 which punctures and thereby opens the bottle when the cap is threadedly affixed to it. The nozzle 151 is in communication with a dispensing orifice 152 formed in the cap, for dispensing the product from the bottle.

In FIGS. 31 and 32, there is shown the upper end of still another bottle 153 having a cap 154 to which is integrally affixed a wing-shaped stopper 155. The stopper 155 has a truncated cone-shaped plug 156 which has threads 157 provided on it for threadedly engaging the plug 156 into the aperture or opening 158 (FIG. 32) to reclose the bottle 153 after the stopper 155 is severed therefrom. Severance of the stopper is accomplished merely by twisting it, to break the integrally formed connection between the plug 156 and the cap 154. An annularly extending sealing flange 159 also preferably is formed about the upper end of the plug 156, for forming a tight seal with the top of the cap 154. Alternatively, the sealing flange 159 can be replaced with a recessed sealing groove (not shown). In this case, the peripheral edge of the opening 158 in the cap 154 will snap-fit into the sealing groove when the plug 156 is fully threaded into the opening.

In FIGS. 33—37, there is illustrated a mandrel 160 which is adapted for use with a mold and a neck jaw generally of the construction shown in FIG. 19, to form a bottle having a neck portion and a severable cap which is adapted to be threaded exteriorly on the neck portion of the bottle, rather than interiorly thereof, as in the case of the cork-type cap of FIG. 20. In the illustrated embodiment, the neck portion of the bottle and the cap have quarter threads formed on them for removably affixing the cap to the bottle once the cap has been removed, however, full threads can be provided also.

The mandrel 160 includes a sleeve 161 having threads 162 at its upper end for attachment to means for vertically raising and lowering it. Its lower terminal end is formed to provide a flat seat 163 which cooperates with an annular upstanding pointed flange 164 on the plate 165, to form an annular groove in the flange portion connecting the cap to the bottle, in substantially the manner described above, which groove permits the cap to be more easily severed from the bottle. The plate 165 generally corresponds to and is affixed to the main mold in the same manner as the plate 110 is affixed to the mold 104, of the molding apparatus 100.

As indicated above, the neck portion of the bottle and the cap have quarter threads formed on them, which quarter

threads are adapted to interlock to securely refix the cap to the bottle. These quarter threads are formed by means of thread grooves in the neck jaw (not shown) cooperatively related with the main mold, which thread grooves provide the quarter threads generally represented by the reference numeral **171**, and by means of thread projections on the neck-forming portion of the cap mold. One of these latter thread projections **170** is generally illustrated in dotted lines in FIG. **33**, and the threads formed by them are generally illustrated by means of the thread indentations **176**. The manner in which these quarter threads are blown is described more fully below.

One difficulty encountered in forming this type of cap for a bottle is in preventing the lower end of the sleeve **161** which, of necessity, must be slightly larger in diameter than the neck portion of the bottle in order to seal the parison so that the bottle can be blown and to form the annular groove in the flange portion connecting the cap and the neck portion, from engaging and damaging the threads formed in the cap. This can be seen in FIG. **33** where it is apparent that the lower end of the sleeve **161** will engage the interior surface of the thread indentations **176**, if the sleeve is vertically raised. In doing so, normally the plastic material forming the thread is partially scraped off so to form a defective thread. Also, in many cases, the plastic material is left so thin that it is subject to rupturing accidentally.

To avoid any substantial damage to the threads, the sleeve **161** is formed with a number, four in the illustrated embodiment, of flexible fingers **167** which, as can be best seen in FIGS. **34—37**, are displaced 90° from one another. Slots **168** are formed in the sleeve **161**, so as to form a reduced thickness or width area **169** on each of the fingers for better flexing action. The flexible fingers **167** also each have a cam surface **172** on their exterior surfaces which cooperate with an annular cam surface **173** on a cam sleeve **174**, to flex these fingers inwardly of the sleeve **161**, as can be best seen in FIGS. **33** and **34**.

The cam sleeve **174** is concentrically disposed about the sleeve **161**, in spaced relationship to it so as to form an air passageway **178** between the sleeve **161** and the cam sleeve **174**. The terminal end **179** of the cam sleeve **174** cooperates with the cap mold assembly (not shown) to seal the parison **177** at **180**, to permit that portion of the cap between the seal at **180** and the seal formed between the flat seat **163** and the pointed flange **164** to be blown. In the illustrated embodiment, the air passageway **178** is provided for injecting air into the parison **177** to form this portion of the cap, however, it also can be formed by providing a number of air openings in the sleeve **161**. In this latter case, that portion of the cap then is blown simultaneously with the blowing of the bottle.

The cam sleeve **174**, at its upper end, is affixed to the sleeve **161**, by means of a collar **180** which is threadedly affixed thereto. The collar **180** is formed to provide a cavity **181** in which is retained an enlarged flange portion **182** on the end of the cam sleeve **174**, and a spring **183** which bears against the flange portion **182** on the cam sleeve **174** to normally forcibly urge it downwardly so as to seat on the bottom wall **184** of the cavity **181**. In this position, the flexible fingers **167** of the sleeve **161** all are expanded, as illustrated in FIGS. **34** and **37**. An air inlet **185** in the sleeve **161** is in communication with the cavity **181**, and a source of air is coupled to this air inlet for coupling air through the air passageway **178** to blow and thereby form the above-described portion of the cap.

A second air inlet **186** is provided in the collar **180**, and this air inlet also is in communication with the cavity **181** but it is disposed in a fashion such that air injected through it into the cavity **184** engages the underside of the enlarged flange portion **182** on the end of the cam sleeve **174**. The cam sleeve **174** is thereby caused to vertically raise with respect to the sleeve **161**. In doing so, its cam surfaces **173** slidably engage the cam surfaces **174** on the flexible fingers **167** and cause these fingers to flex inwardly of the sleeve **161**, as can be best seen in FIGS. **35** and **36**. With the flexible fingers **167** in this position, the mandrel **160** can be vertically raised, and the lower end of the sleeve **161** is substantially free to bypass the threads formed on the cap without causing any substantial damage to them. O-rings **188** and **189** are provided for sealing the cavity **181** against loss of air.

A filling tube **190** is concentrically and slidably disposed within the sleeve **161**, and is adapted to be vertically raised and lowered. The lower end of the filling tube normally is closed by means of a valve plate **191**, and the latter is operated by a plunger **192** to open the filling tube to permit the product to be injected into the blown bottle.

In FIG. **38**, there is illustrated still another mandrel **195** which is adaptable for use with a main mold to form a bottle having a threaded neck portion and a cap which is adapted, after being severed, to be threadedly affixed externally about the neck portion, to reseal the bottle. It is generally well known that the internal diameter d_1 of the threads on such a cap must substantially correspond to the outer diameter d_2 of the threads on the neck portion of the bottle, to which the cap is to be threadedly affixed. When the cap is integrally molded with the neck portion of the bottle, as it is proposed in the present invention, it is rather difficult to keep or make these diameters d_1 and d_2 equal and still permit the cap to be easily initially threadedly engaged with the neck portion. Also, the threads in the cap normally are damaged, in the manner described above, when the mandrel is withdrawn.

All of these prior problems are overcome with the arrangement illustrated in FIG. **38**. In this case, the mandrel **195** is offset axially with respect to the center axis of the bottle **196** by a very small distance which can be approximately 0.050 inches. In offsetting the mandrel **195** in this manner, its lower terminal end **197** is caused to engage atop the plate **198** which forms the severable flange between the cap and the neck portion of the bottle so as to form a very narrow in width flange about a substantial portion of the diameter of its terminal end. The remaining portion of the flange is a relatively wide in width flange. This can be seen in FIG. **38**, where the flange portion **199** is very narrow in width, whereas the flange portion **200** is relatively wide in width. When the cap is severed from the bottle, the narrow in width flange portion **199** permits at least a portion of the cap threads to threadedly engage the threads on the neck portion of the bottle, so that the cap now is easily threaded onto the bottle. Also, the wide in width flange portion **200** is relatively thin and is flexible so that it can be deflected for cap entry.

The offset or eccentrically located mandrel **195** also provides more space for the parison, and the terminal end of the mandrel can be withdrawn from the blown threaded portion of the cap without causing any substantial damage to the threads. Accordingly, the need for flexible fingers such as the flexible fingers **167** in the sleeve **161** of the mandrel **160** shown in FIG. **33** is eliminated. The threads in this case are blown simultaneously with the bottle **196**, by means of air passing through the air openings **202** in the mandrel.

As indicated above, in some cases it is desirable to form bottles of the above-described type of a substantially strong plastic material which cannot be easily severed to remove the caps integrally formed therewith. In FIGS. **39—42**, there is illustrated a cap removing device **205** which is adapted to remove the caps in a fashion such as to prevent any of the bottle material from accidentally entering the bottle or its contents, and such that the cap can be used to reclose the bottle.

The cap removing device **205** is a plier-type device including two arms **206** and **207** which are fixedly and pivotally affixed together by means of pivot pin **208** so that they can be closed and opened, as illustrated in FIGS. **39** and **41**, respectively. These two arms **206** and **207** are correspondingly formed to provide a number, three in the illustrated example, of generally circular-shaped sockets **210**, **211** and **212** for receiving therein neck portions of various diameters. As can be best seen in FIGS. **40** and **42**, each of these sockets **210—212** is threaded, and furthermore has a cutting blade insert **213**, **214** and **215** disposed within a recessed pocket thereof, respectively. Stop members **216** and **217** are provided on the

arms **206** and **207**, respectively, for preventing the arms from closing tightly about the neck portion of a bottle.

In use, the appropriate one of the sockets **210—212** is selected to fit about the neck portion **219** of a bottle **220**, as illustrated in FIG. **42**. Preferably the neck portion **219** is not squeezed between the arms **206** and **207**, but is instead just snugly held, with the threads within the socket threadedly engaged with the threads on the neck portion **219**. Once the neck portion **219** is captivated within the socket in this fashion, the cap removing device **205** or the bottle **220** is rotated. As can be seen in FIG. **42**, the cutting point of the cutting blade insert **215** will engage the flange connection between the cap **221** and the neck portion **219**, and will sever it as the bottle **220** or the cap removing device **205** is continued to be rotated.

In the illustrated embodiment, the cutting blade inserts **213—215** are shown having relatively sharp cutting points on them. In such cases, it is preferred to have these cutting points covered in some fashion, to prevent them from cutting anyone. This can be done by inserting the cutting blade inserts with recessed pockets, as illustrated, or alternatively, a removable handle grip or the like can be slipped over the arms to cover the sharp cutting points. Normally, however, these cutting points need not be sharp and therefore no protective means are necessary. They need not be sharp since only a pushing action rather than a cutting action generally is required to remove the caps.

A generally similar type cap removing device which can be, for example, incorporated into a vending machine to remove the caps on the containers can be constructed by fixedly securing the two arms **206** and **207** in parallel spaced relation. In this case, only one socket would be formed at one end of the two arms. The containers would be slidably engaged on the arms with the latter disposed about the neck portion of the container, below the cap. To remove the container and the cap, the container would be released in any suitable manner presently used to release the containers when they are purchased. Thereafter, the containers are slidably displaced on the two spaced apart arms until the socket at the one end is reached. The container then is rotated to remove the cap in the manner described above, by rotating it manually or automatically. The removal of the cap would then permit the container to be removed from the vending machine.

It will thus be seen that the objects set forth above, among those made apparent from the preceding description, are efficiently attained and certain changes may be made in carrying out the above method and in the construction set forth. Accordingly, it is intended that all matter contained in the above description or shown in the accompanying drawings shall be interpreted as illustrative and not in a limiting sense.

We claim:

1. Apparatus for molding, filling and sealing containers from a tube of thermoplastic material comprising: a pair of relatively movable mold forms for forming a main body portion of the container including the bottom part of the container; a pair of neck jaw mold forms affixed respectively to said pair of movable mold forms for forming the neck portion of the container and the main body portion of a cap for said container; a pair of slidable upper cap forming mold forms for forming the top of said cap to seal said container; a mandrel including a filling spout, means for introducing said filling spout into the open end of a length of said tube, means associated with said filling spout for supplying fluid under pressure into said tube to expand it into contact with said mold forms to form the main body portion of the container and for supplying a flowable material into the formed container, said mandrel and said pair of neck jaw mold forms having means cooperating to provide a weakened flange connection between the upper end of the neck portion of the container and the cap integrally formed therewith so as to permit said cap to be severed from said container by simultaneously twisting and lifting it, or by twisting and downwardly engaging said cap with said container.

2. The apparatus of claim **1**, wherein said pair of neck jaw mold forms have a flat, horizontally disposed molding surface, and the terminal end of said mandrel has an annular downwardly depending pointed flange which cooperates with said molding surface to pinch the tube therebetween to form an annular groove in the flange connection between the upper end of the neck portion of the container and the cap integrally formed therewith on the interior of said cap to thereby weaken said flange connection to permit said cap to be severed from said container by simultaneously twisting and lifting it.

3. The apparatus of claim **2**, wherein said mandrel is adjustably affixed to said filling spout so as to be vertically adjustably displaced with respect to it to adjust the spacing between the pointed flange on the terminal end thereof and the molding surface on said pair of neck jaw mold forms, whereby the depth of said annular groove can be controlled.

4. The apparatus of claim **1**, wherein said pair of neck jaw mold forms are formed to provide an upstanding pointed annular flange, and the terminal end of said mandrel has a flat horizontally disposed molding surface on it which cooperates with said annular flange to pinch the tube therebetween to form an annular groove in the flange connection between the upper end of the neck portion of said container and the cap integrally formed therewith on the exterior surface thereof to thereby weaken said flange connection to permit said cap to be severed from said container by simultaneously twisting and lifting it.

5. The apparatus of claim **3**, wherein said mandrel is adjustably affixed to said filling spout so as to be vertically adjustably displaced with respect to it to adjust the spacing between the molding surface on its terminal end and the annular pointed flange on said pair of neck jaw mold forms, whereby the depth of said annular groove can be controlled.

6. The apparatus of claim **2**, wherein said neck jaw mold forms are adapted to form an annular recessed groove in the neck portion of said container, and wherein said mandrel and said neck jaw mold forms are proportioned to form an annular groove in the flange connection between said neck portion of said container and the cap integrally formed therewith of a diameter such that the peripheral edge of the severed portion of said flange connection which remains integral with said cap when the latter is severed from said container will snap-fittingly engage in said recessed groove in the neck portion of said container to affix said cap to said container to reclose it.

7. The apparatus of claim **4**, wherein said neck jaw mold forms are adapted to form an annular recessed groove in the neck portion of said container, and wherein said mandrel and said neck jaw mold forms are proportioned to form an annular groove in the flange connection between said neck portion of said container and the cap integrally formed therewith of a diameter such that the peripheral edge of the severed portion of said flange connection which remains integral with said cap when the latter is severed from said container will snap-fittingly engage in said recessed groove in the neck portion of said container to affix said cap to said container to reclose it.

8. The apparatus of claim **1**, wherein said pair of neck jaw mold forms have an annular pointed flange which is disposed to extend horizontally into the mold cavity formed therebetween, and wherein said mandrel has a conical-shaped end portion which tapers inwardly from the top to the bottom thereof, said conical-shaped end portion cooperating with said annular pointed flange of said pair of neck jaw mold forms to provide a substantially horizontally disposed recess in the flange connection between the neck portion of said container and the cap integrally formed therewith, to thereby weaken said flange connection to permit said cap to be severed from said container.

9. The apparatus of claim **1**, wherein said pair of neck jaw mold forms are adapted to form interior peripheral threads on the neck portion of said container and have an annular pointed flange which is disposed to extend horizontally into the mold cavity formed therebetween at the terminal edge of

said neck portion, a pair of cap forming mold forms affixed atop said pair of neck jaw mold forms for forming the main body portion of a cap and a neck portion having external peripheral threads on it on said main body portion of said cap, said neck portion and the threads thereon being proportioned to threadably fit into the neck portion of said container to reclose said container when said cap is severed from said container, said pair of slidable upper cap forming mold forms being disposed atop said pair of cap forming mold forms, said mandrel having a conical-shaped end portion which tapers inwardly from the top to the bottom thereof, said conical-shaped end portion cooperating with said annular pointed flange of said pair of neck jaw mold forms to provide a substantially horizontally disposed recess in a flange connection between the neck portions of said container and said cap, to thereby weaken said flange connection to permit said cap to be severed from said container.

10. The apparatus of claim **1**, wherein said pair of neck jaw mold forms have an upstanding annular pointed flange formed on them, and wherein the terminal end of said mandrel has an annular downwardly depending pointed flange which cooperates with the annular pointed flange on said pair of neck jaw mold forms to pinch the tube therebetween to form an annular weakened flange connection between the upper end of the neck portion of the container and the cap integrally formed therewith, to permit said cap to be severed from said container by simultaneously twisting and lifting it.

11. The apparatus of claim **1**, wherein said pair of neck jaw mold forms are formed to provide a conical-shaped mold cavity therebetween which tapers inwardly from the top to the bottom thereof, and wherein the end of said mandrel has a conical-shaped flange on it which tapers downwardly and outwardly to form a pointed mold surface, said pointed mold surface cooperating with said conical-shaped mold cavity to pinch said tube therebetween to form an annular groove in the flange connection between the neck portion of the container and the cap integrally formed therewith to thereby weaken said flange connection to permit said cap to be severed from said container.

12. The apparatus of claim **2**, wherein said neck jaw mold forms are adapted to form peripheral threads on the neck portion of said container, and wherein said mandrel and said neck jaw mold forms are proportioned to form an annular groove in the flange connection between said neck portion of said container and the cap integrally formed therewith of a diameter such that the peripheral edge of the severed portion of said flange connection which remains integral with said cap when the latter is severed from said container will threadedly engage with the peripheral threads formed on the neck portion of said container to affix said cap to said container to reclose it.

13. The apparatus of claim **4**, wherein said neck jaw mold forms are adapted to form peripheral threads on the neck portion of said container, and wherein said mandrel and said neck jaw mold forms are proportioned to form an annular groove in the flange connection between said neck portion of said container and the cap integrally formed therewith of a diameter such that the peripheral edge of the severed portion of said flange connection which remains integral with said cap when the latter is severed from said container will threadedly engage with the peripheral threads formed on the neck portion of said container to affix said cap to said container to reclose it.

14. The apparatus of claim **1**, wherein said mandrel comprises a tubular sleeve, the lower terminal end of said sleeve cooperating with said pair of neck jaw mold forms to weaken the flange connection between the upper end of the neck portion of the container and the cap integrally formed therewith, the sidewalls of said tubular sleeve being formed to provide a plurality of flexible fingers therein, a cam surface on each of said flexible fingers, a cam sleeve slidably concentrically disposed about said sleeve having a cam surface therein which is disposed to engage said cam surfaces on said flexible fingers to cause said flexible fingers to bend inwardly of said sleeve, and cam sleeve operating means for operating said cam sleeve to engage the cam surface therein with said cam surfaces on said flexible fingers, said filling spout being slidably disposed within said sleeve.

15. The apparatus of claim **14**, further including an enlarged outwardly extending flange portion about the upper end of said cam sleeve, a collar removably affixed to said sleeve having an annular cavity therein for receiving and retaining therein the flange portion on said cam sleeve to affix the latter to said sleeve, biasing means within said cavity engaged with said flange portion for normally biasing said cam sleeve to disengage the cam surface therein from the cam surfaces on said flexible fingers, said cam sleeve operating means operating said cam sleeve against said biasing means to engage said cam surfaces.

16. The apparatus of claim **15**, wherein said biasing means normally bias said cam sleeve vertically downwardly with respect to said sleeve, an air inlet in said collar in communication with the cavity therein for impinging air beneath the flange portion on said cam sleeve to vertically raise said cam sleeve with respect to said sleeve to engage the cam surfaces to bend said flexible fingers, said cam sleeve operating means comprising a source of air coupled to said air inlet and means for controlling the supply of air from said source to said air inlet.

17. The apparatus of claim **15**, wherein said cam sleeve is concentrically disposed about said sleeve in spaced relation thereto so as to provide an air passageway between said sleeve and said cam sleeve which is in communication with said cavity in said collar, an air inlet in said sleeve in communication with said cavity in said collar for supplying air into said cavity and through said air passageway to blow the neck portion of said closure cap, and a source of air coupled to said air inlet in said sleeve.

18. The apparatus of claim **1**, wherein said mandrel is axially offset with respect to the center axis of said pair of relatively movable mold forms and said pair of neck jaw mold forms.

19. The apparatus of claim **1**, wherein said mandrel comprises a tubular sleeve, the lower terminal end of said sleeve cooperating with said pair of neck jaw mold forms to weaken the flange connection between the upper end of the neck portion of the container and the cap integrally formed therewith, the sidewalls of said tubular sleeve being formed to provide a plurality of flexible fingers therein, the lower terminal end of said flexible fingers cooperating with said pair of neck jaw mold forms to form a corresponding number of outwardly extending cavities in the neck portion of a closure cap for receiving therethrough partial threads formed on the neck portion of a container, a cam surface on each of said flexible fingers, a cam sleeve slidably concentrically disposed about said sleeve having a cam surface therein which is disposed to engage said cam surfaces on said flexible fingers to cause said flexible fingers to bend inwardly of said sleeve, and cam sleeve operating means for operating said cam sleeve to engage the cam surface therein with said cam surfaces on said flexible fingers, said filling spout being slidably disposed within said sleeve.

20. The apparatus of claim **1**, wherein said mandrel is axially offset with respect to the center axis of said pair of relatively movable mold forms and said pair of neck jaw mold forms so as to form a narrow in width flange connection about a substantial portion of the diameter of the neck portion of a container and a relatively wide in width flange connection about the remaining portion of the diameter.