United States Patent [19]

Scherr et al.

[11] **3,945,409**

[45] **Mar. 23, 1976**

[54] **DEVICE FOR FEEDING LENGTHS OF WIRE TO A PROCESSING MACHINE**

[75] Inventors: **Rudolf Scherr; Walter Jamnig; Hans Gött; Klaus Ritter,** all of Graz, Austria

[73] Assignee: **EVG Entwicklungs- und Verwertungs-Gesellschaft m.b.H.,** Graz, Austria

[22] Filed: **May 30, 1975**

[21] Appl. No.: **582,247**

[30] **Foreign Application Priority Data**

May 30, 1974 Austria 4500/74

[52] **U.S. Cl.** ..... **140/112;** 198/26; 214/1 P; 221/105

[51] **Int. Cl.**[2] **B21F 23/00**

[58] **Field of Search**..... 140/112; 214/1 P; 198/26, 198/104; 221/11, 81, 82, 84, 85, 104, 105

[56] **References Cited**

UNITED STATES PATENTS

1,923,369	8/1933	Gronemeyer	140/112
2,660,287	11/1953	Ames et al.	198/26
3,127,829	4/1964	Rossi	198/104
3,373,868	3/1968	Missioux et al.	198/104

FOREIGN PATENTS OR APPLICATIONS

1,101,336	3/1961	Germany	140/112

Primary Examiner—Lowell A. Larson
Attorney, Agent, or Firm—Ernest F. Marmorek

[57] **ABSTRACT**

Device for feeding lengths of wire to a processing machine, particularly a lattice welding machine, by separating a bundle of wire into smaller portions, aligning the smaller portions, and removing individual wire lengths from the smaller portions for conveyance to the processing machine.

14 Claims, 4 Drawing Figures

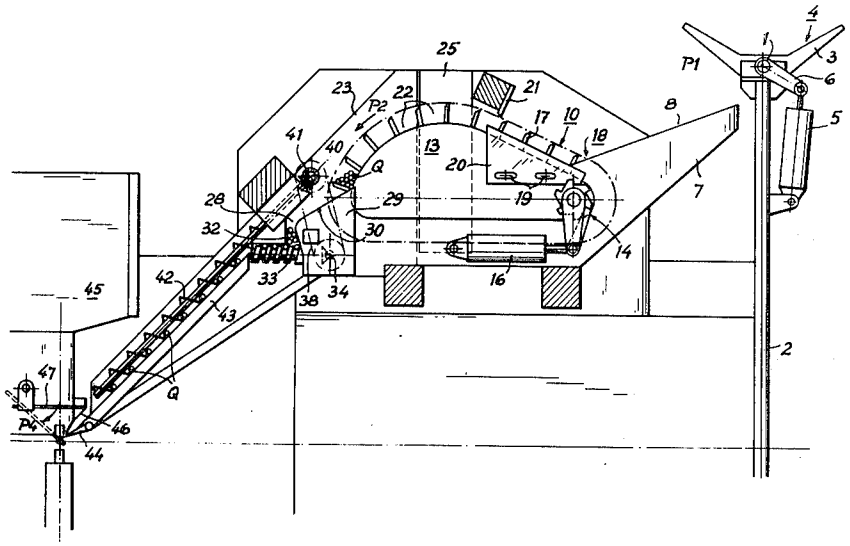

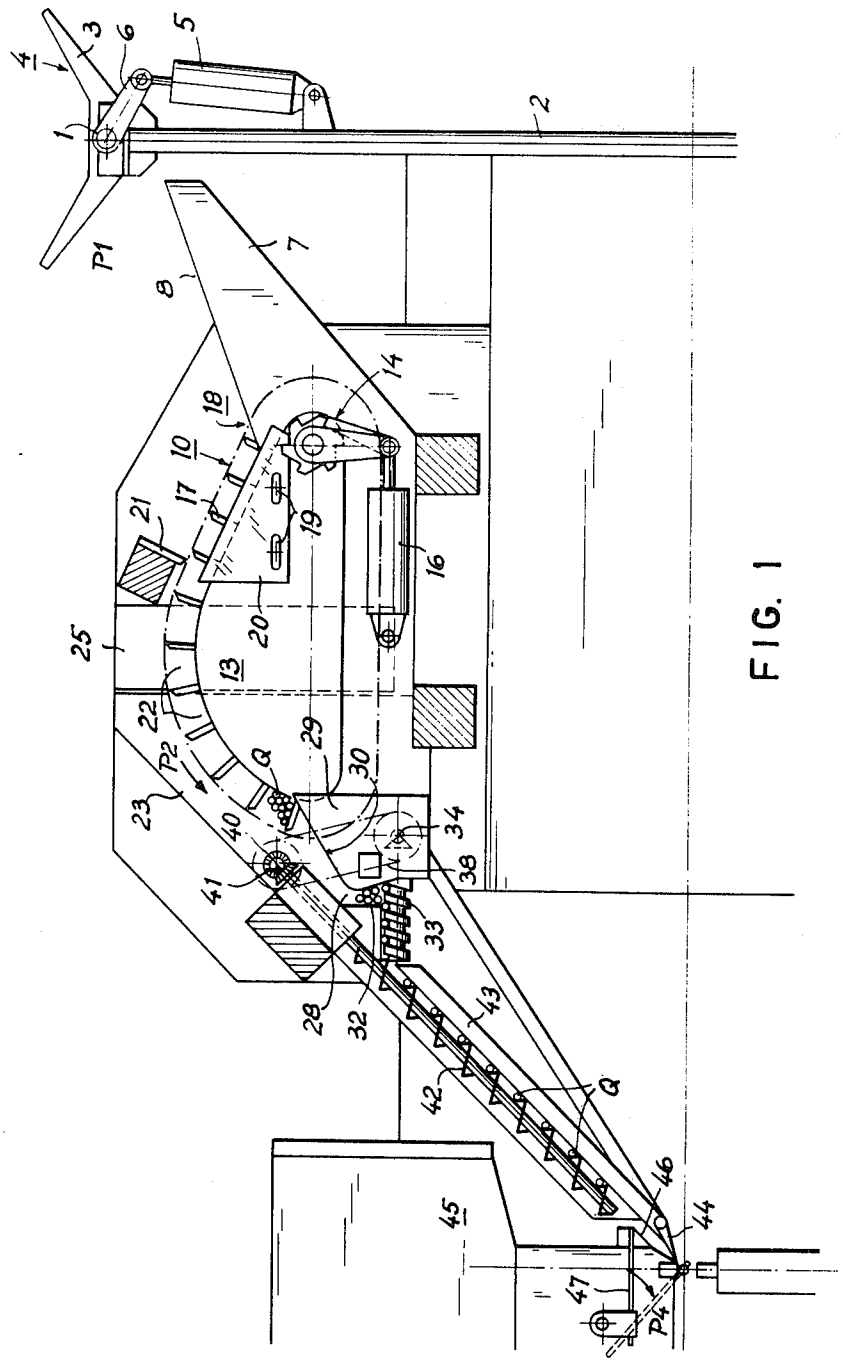
1
2
3
4
5
6
7
8
10
13
14
16
17
18
19
20
21
22
23
25
28
29
30
32
33
34
38
40
41
42
43
44
45
46
47
P1
P2
P4
Q

FIG. 1

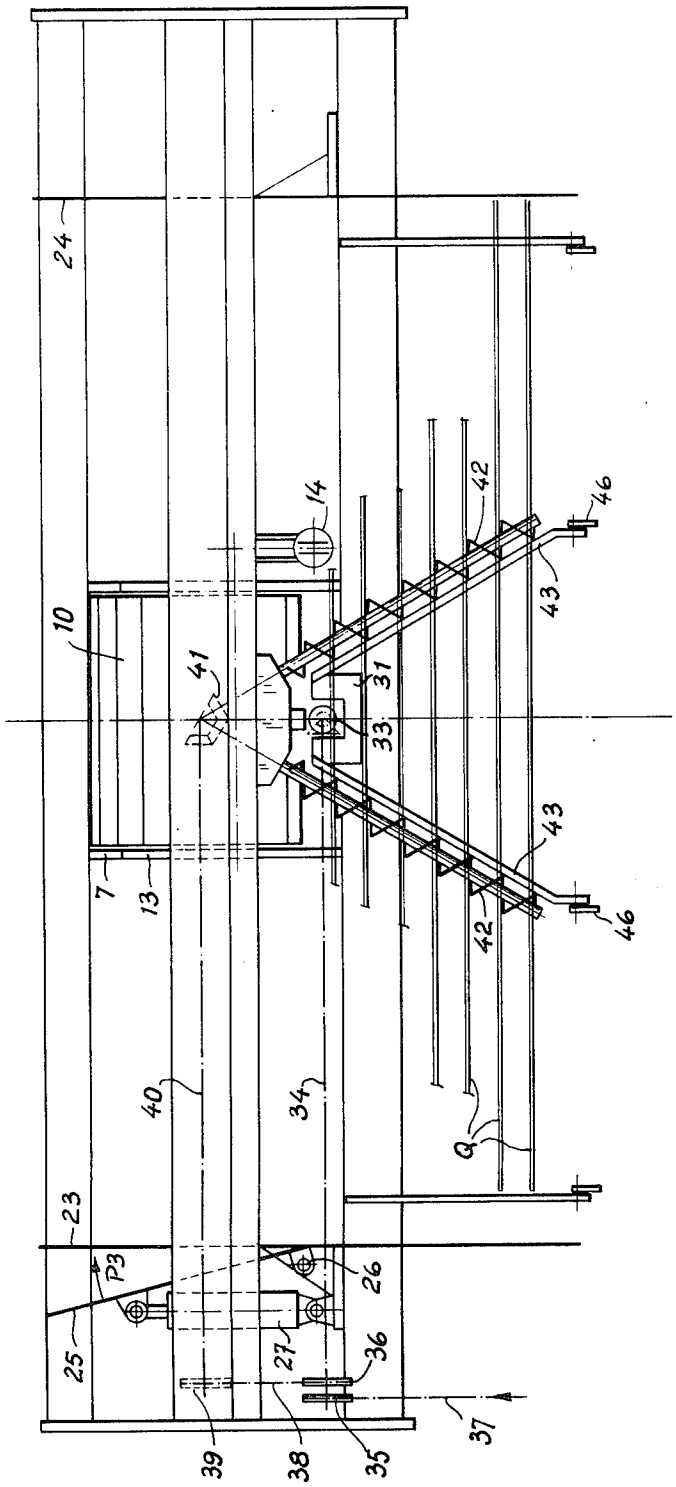
24
14
42
46
43
10
41
31
33
43
7
13
42
46
40
34
Q
23
P3
26
25
27
36
39
38
35
37

FIG. 2

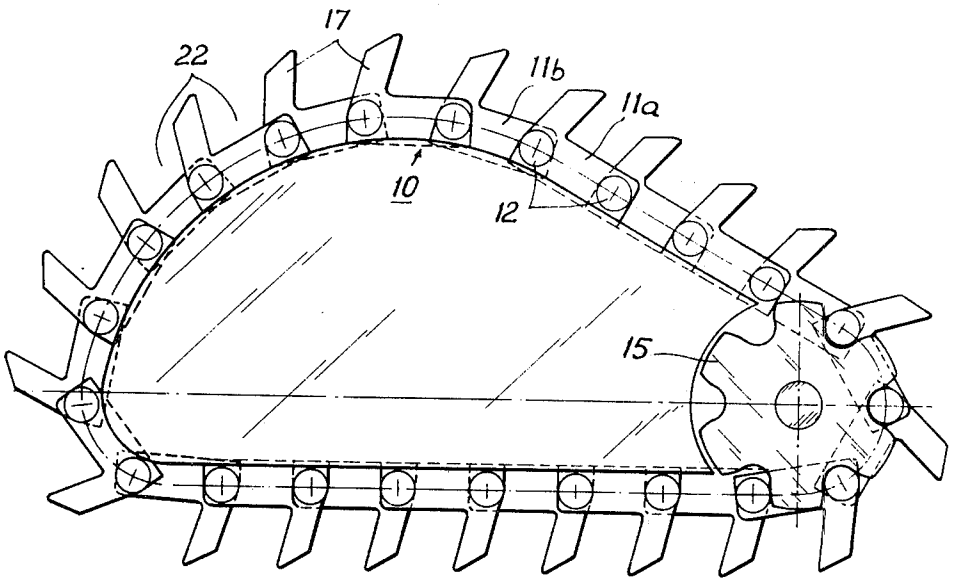

FIG. 3

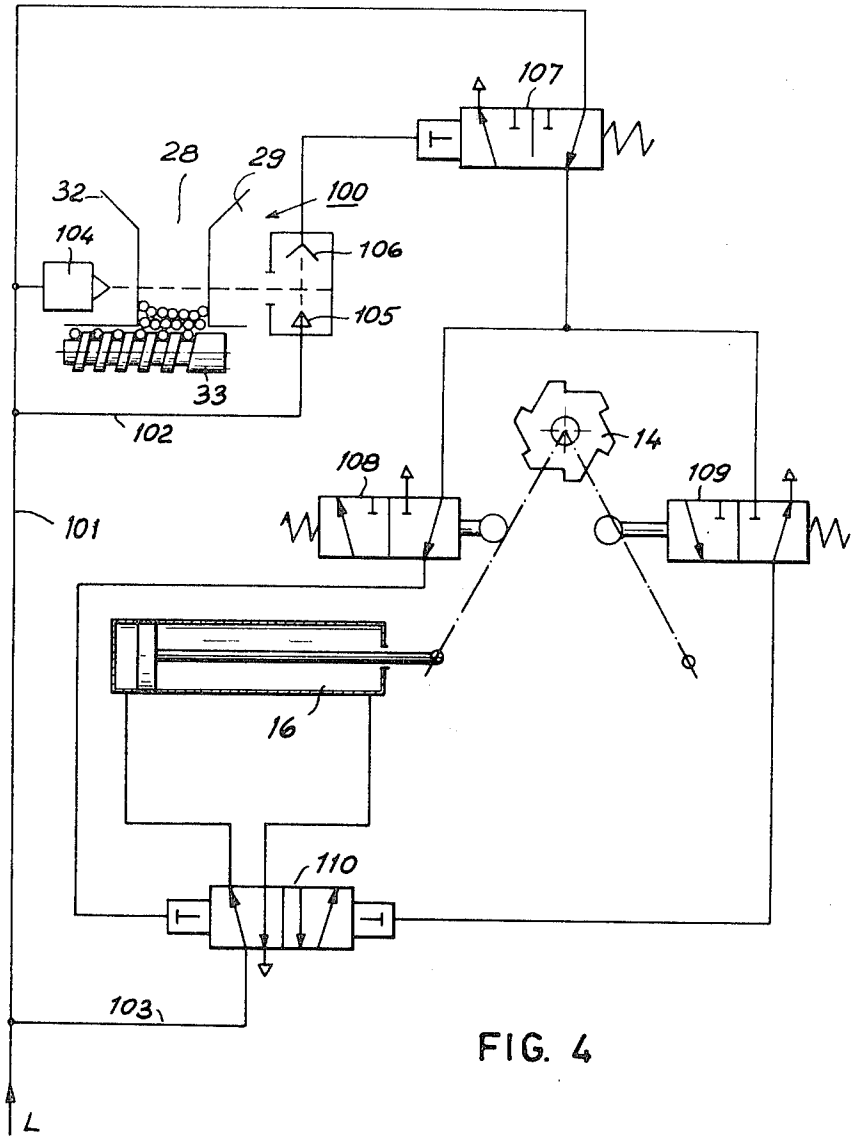

FIG. 4

DEVICE FOR FEEDING LENGTHS OF WIRE TO A PROCESSING MACHINE

BACKGROUND OF THE INVENTION

The invention relates to a device for feeding lengths of wire to a procesing machine, by means of a separating member acting as a holder separator means for releasing individual wire lengths from a bundle, e.g., a threaded spindle or disc with peripheral grooves cooperating with a stripper member. It is particularly intended to use the device according to the invention for feeding transverse lengths of wire to a lattice welding machine.

From OE-PS No. 189 890 it is known to separate individual wires from bundles of wires and to pass the separate wired on to a processing machine in an orderly manner by picking up the wires at the outer circumference of the loose bundle at a relatively small zone compared to the wire length by means of for example a threaded spindle or disc with peripheral grooves and a separating member cooperating with a stripper and by rotating the spindle or disc at right angles to the longitudinal direction of the wires to separate the wires first of all in the area of the said zone and then to gradually and progressively pull out the wires from the bundle and to completely separate the wires from the bundle.

In the practical application of such devices it is desirable to reduce the operating and attendance time to a minimum, which necessitates in particular that the device be supplied at relatively long time intervals. This necessarily requires that the device be able to handle large quantities of wire at a time. This however results in the danger, particularly with long wires, that the wires in the large bundles deviate considerably from the relative parallel position so that a wire grasped by the separating member cannot be pulled out of the wire bundle without receiving substantial deformation as a result of having been jammed together with the other wires.

The invention deals with the problem of solving this disadvantage and to provide a device of the type referred to at the beginning, on the one hand for directly feeding to it large bundles of wire lengths and on the other hand for enabling it to work the separated wires without interruption and without unacceptable deformations. This object is achieved according to the invention in that the separating member has provided in front of it an endless belt with paddle devices extending away from it to form a rotating endless row of paddles. In an area of upwardly moving paddles in conjunction with slide paths sloping downwards toward the row of paddles there is formed a trough for holding the bundles of wire lengths. The compartment formed between each pair of adjacent paddles of the row of paddles acts as a wire retaining compartment having a storage capacity substantially smaller than the storage capacity of the trough. Directly in front of the separating member there is provided an intermediate storage chamber which has the same storage capacity as that of a compartment of the row of paddles and which receives wires from the compartments.

In the device according to the invention the paddle chain therefore picks up from the trough pre-measured smaller quantities of wires, filling each time a compartment on the paddle chain. These smaller quantities of wire lengths are fed to an intermediate store, in front of the separating member, whose capacity corresponds only to that of a compartment of the paddle chain. From the relatively small wire bundle in the intermediate storage chamber it is then possible by means of the separating member to pick out separate wire lengths safely and without danger of deformation.

In the intermediate storage chamber there is preferably provided a sensor for sensing the presence of a predetermined minimum quantity of wire lengths and which in the absence of this minimum quantity through a control device actuates means for advancing the paddle chain forward one step.

Advantageously along a part of the upwardly moving path of the row of paddles there are provided fixed but preferably adjustable limiter plates which limit the depth of the compartments of the row of paddles. This ensures that after "filling to the brim" of the compartments, by sliding the wires off the limiter plates above the wire bundle, by adjusting the plate a selected part of each compartment remains empty, thereby permitting safe further conveyance of the wire lengths. This aim may be further advanced in that in the area of the upper end of the limiter plates above the path of travel of the paddles there is provided a stripper member. It is then impossible to get a jam between the wires in the various compartments and the wires are further transported in essentially parallel alignment with each other.

According to a further feature of the invention on one side of the row of paddles there is provided a rigid abutment surface for one of the wire ends and on the opposite side there is provided a movable abutment surface for the other wire ends, e.g., in the form of a pivotable flap. By operating the movable abutment surface or the movable flap, which preferably takes place in synchronism with the movement of the row of paddles, it is possible to bring the ends of the wires into a relatively compact position.

According to a still further feature of the invention in the area of the revolving path of the row of paddles opposite the trough there are provided guide panels which form downwardly sloping slide paths extending from the revolving path of the compartments of the row of paddles to the intermediate storage chamber. This has the effect that the wires are fed in an essentially orderly manner and in parallel alignment from the compartments into the intermediate storage chamber.

In a preferred embodiment of the invention the row of paddles has the form of a paddle chain with interlinked L-shaped chain links; such a paddle chain enables a good adjustment of the path of revolution to the desired working conditions of the device.

Further features of the invention will become obvious from the following description and drawings of an example of an embodiment of the invention.

BRIEF DESCRIPTION OF THE DRAWINGS

FIG. 1 is a schematic side elevation of the device according to the invention for feeding transverse lengths of wire to a lattice welding machine.

FIG. 2 is a schematic plan view of the device according to FIG. 1.

FIG. 3 shows a view of the paddle chain of this invention on an enlarged scale.

FIG. 4 represents a sensing and control device for the step-by-step forward movement of the paddle chain.

In the device according to FIGS. 1 and 2 a support, extending the whole width of a welding machine and swivelably fixed to a stand 2 by a bearing bolt 1, is provided with V-shaped supporting surfaces 3 arranged

at intervals parallel to each other. These V-shaped supporting surfaces **3** form a basket-like container **4** for receiving a large quantity of evenly aligned transverse lengths of wire. The transverse wire lengths are placed into the container **4** as a loose bundle.

By means of a pneumatic or hydraulic cylinder **5** and a lever **6** non-rotatably connected with one of the bearing bolts **1** it is possible to tip the container **4** from its rest position in the direction of the arrow **P1.** The transverse lengths of wire stored in the container **4** are thus deposited onto two parallel supporting members or inclined-holding conveyor means **7** arranged at a distance from each other and laterally displaced relative the supporting surfaces **3.** The upper edges **8** of the members **7** are inclined and form sliding surfaces. The container **4,** after each return movement into its rest position, can immediately be re-supplied with fresh transverse lengths of wire.

Between the two supporting members **7** there is arranged in a housing a continuous paddle chain **10,** separately shown on its own in FIG. **3,** from which paddles **17** extend upwards normally essentially over the whole circumference of the chain. The entire chain is composed of two types of links, e.g., outer links **11***a* and inner links **11***b*. The two types of links are shaped so that they can be meshed in a cog-like manner at the interconnecting swivel points. Each of the two essentially L-shaped chain links has two drillings, one in the link at which the two arms of the L meet, and the other in the end of the longer arm. These drillings contain guide bolts which carry guide rollers **12** on the outside. On the side walls **13** of the chain housing there are provided guide grooves for the rollers **12.** The chain **10** is driven for example by a pneumatic or hydraulic cylinder **16** and a pawl drive **14** which rotates a chain wheel **15.**

The upwardly extending arms of the chain links **11***a*, **11***b* form the paddles **17** which extend at right angles over the central area of the supply path of the transverse wire lengths. In conjunction with the sloping upper edges **8** of the supporting members **7** the paddle chain **10** forms an essentially V-shaped trough **18** into which the transverse wire lengths are tipped out of the container **4.** As a result of the slope of the upper edges **8** of the supporting members **7** towards the paddle chain **10** the transverse wire lengths supported by the members **7** slide or roll towards the deepest point of the trough **18,** i.e., towards the paddles **17.** Then, when the paddle chain **10** is rotated in the direction of the arrow **P2** a number of transverse wires are deposited in box-like compartments **22,** formed between adjacent paddles **17,** and conveyed along by the continuously moving paddle chain. The carrying capacity of the compartments **22** is substantially smaller than that of the trough **18.**

On both sides of the paddle chain **10** there are screw-lockable limiter plates **20** displaceably arranged in oblong holes **19** for limiting the depth of the box-like wire retaining compartments **22** formed by the paddles **17** near the area in which the transverse wires are transferred from the supporting members **7** to the paddle chain **10.** This has the effect that fewer transverse wire lengths are received than could be accommodated between two adjacent paddles **17** because of the size of each box-like compartment **22.** Near the upper end of the limiter plates **20** there is provided a stripper **21** for stripping off any transverse wire lengths which protrude beyond the upper limit of the paddles **17.**

When a compartment **22,** formed of two adjacent paddles **17,** is advanced to the far end of the rear edge of the limiter plates **20** the transverse wire lengths **2** drop down until they come to rest on the two side walls **13** of the chain housing. They are now positioned deep inside the compartment **22** formed by the two adjacent paddles **17** and can thus be safely further conveyed.

During transport the transverse wire lengths are laterally guided by two limiting panels **23, 24,** which can be seen in FIG. **2.** A flap **25** swivelling about an axis **26** is provided on the side of the limiting panel **23** and in front of the same in the advancing direction of the transverse wires. A pneumatic or hydraulic work cylinder **27** can move the flap **25** from a position indicated by arrow **P3** (FIG. **2**) into the plane of the limiting panel **23** and back again into its rest position. This movement aligns all the transverse wire ends in precisely the same plane. The drive of the flap **25** is synchronized with the pawl drive **14** of the paddle chain **10** in such a way that simultaneously with each forward step of the paddle chain the flap **25** is pivoted into the plane of the limiting panel **23** and back again.

In the area of the path of the paddle chain **10** opposite the V-shaped trough there are provided guide walls **29** on the forwardly sloping upper edges **30** of which the transverse wire lengths, resting in a compartment **22** between two adjacent paddles **17** of the chain **10,** are placed. Under the effect of gravity the transverse wire lengths then roll or slide along the sloping upper edges **30** of the guide walls **29** until they reach an intermediate storage chamber **28,** which is flanked by the forward edges of the guide wall **29,** the two arms of a small U-shaped platform **31** (FIG. **2**) and the vertical edge of a second stripper member **32,** and which has a capacity which corresponds approximately to that of the compartment **22.**

According to FIG. **4** compressed air from a source L is fed into feed pipes **101, 102, 103.** The feed pipe **101** supplies the nozzle **104** from which the air can escape. The air jet from the nozzle **104** passes across the storage chamber **28,** insofar as wires arranged in this chamber do not deflect it. The air jet thus determines a level and simultaneously senses the wires located at this level.

The nozzle **105** supplied by the feed pipe **102** simultaneously discharges a jet of air which in the unimpeded condition is directed into a funnel shaped collector **106.** The sensor formed of the nozzle **105** and the collector **106** is connected via an air pipe with a spring loaded sensor valve **107.** shaped

In FIG. **4** it is assumed that there are so few wires in the storage chamber **28** that the air jet from the nozzle **104** is able to cross the storage chamber **28** unimpeded. The air jet from the nozzle **104** strikes the air jet from the nozzle **105** sideways and causes this to deflect in such a way that it does not hit the collector **106.**

The sensor valve **107** is therefore not actuated by the collector **106** and is thus retained by its spring in the position indicated in which it connects the feed pipe **101** and branch pipes with two pneumatic terminal switches **108** and **109** which sense the position of the pawl drive **14** or the piston of the pneumatic cylinder **16,** respectively.

In the position indicated the piston of the cylinder **16** is in its forward dead centre position and the terminal switch **108** acts against the action of its spring in such a way that the control valve **110** is actuated from the left and releases the compressed air to flow from the

feed pipe **103** to the front face of the piston **16.** The piston thus performs a work stroke.

As soon as the piston starts to move from the indicated position to the right, the terminal switch **108** under the effect of its spring cuts off the air supply to **110.** The control valve **110** however remains in the position indicated, since no external forces act upon it now, until the pawl drive actuates the terminal switch **109,** whereby a control pulse is transmitted to the right-hand side of the control valve **110** which reverses this in such a way that the piston in the cylinder **16** is actuated from right to left.

When the number of wires in the storage chamber **26** are such that the air jet from the nozzle **104** is deflected, then the air jet from the nozzle **105** hits the collector **106.** This has the effect of operating the sensor valve **107** against the action of its spring, interrupting the feed pipe **101** through the sensor valve **107** and simultaneously releasing the air from this sensor valve to the terminal switches **108, 109.** The control valve **110** remains in the position it has attained at that moment. Since the operation of the terminal switch for limiting the momentary movement of the piston is now unable to effect a reversal of the control valve **110,** because the branch pipes to the terminal switches have now been emptied, the piston in the cylinder **16** completes its travel and remains in its momentary dead center position until a new control sequence initiated by the control valve **107** starts a new operating cycle.

In this way the intermediate storage chamber is intermittently supplied with measured quantities of transverse lengths of wire.

For separating the transverse lengths of wire there is arranged between the two arms of the small platform **31** a threaded spindle **33,** which is driven by a shaft **34** and a pair of bevel gears (only roughly indicated). The shaft **34** carries two chain wheels **35** and **36** at the end facing away from the spindle **33.** The chain wheel **35** is driven by a chain **37** which in its turn is driven by a continuously operating motor (not shown). A chain **38** connects the chain wheel **36** with chain wheel **39** which drives a shaft **40.** Through a bevel gear **41** the shaft **40** finally drives two straddled V-shaped threaded spindles **42,** which are arranged symmetrically to the spindle **33,** which serve to further convey the transverse lengths of wire. The threaded spindles **33** and **42** are thus continuously kept in rotating motion.

The grooves between the threads of the spindle **33** are of such depth and width that only one single transverse length of wire Q can rest in it at any one time and to be passed through beneath the stripper **32.** Of all the transverse wire lengths located in the already mentioned intermediate storage chamber **28,** with its limited capacity, only one is picked up by the spindle **33** about roughly in the centre, freely drawn away from the remaining smaller number of the transverse wire lengths located in the intermediate storage chamber **28,** and advanced towards the conveying spindles **42.** Each one of the wire lengths reaching the spindles **42** is now conveyed between the threads of these spindles and, with the aid of guide rails **43** cooperating with these spindles, conveyed along these guide rails to the electrodes of a known type of welding machine **45,** whereby the supporting points of the transverse wire lengths divide at the point where the spindles **42** and the guide rails **43** start to straddle, thereby firmly holding the transverse wire lengths.

When a transverse wire length has reached the lower end of the spindle **42** it continues to slide under the effect of gravity until it comes to rest between a stop **46** on the actual welding machine and a spring-loaded flap **44** at the lower end of the guide rail **43.** When it pivots from its rest position into the position indicated by the broken lines in the direction of the arrow P4 the transverse wire length feeder **47** of the welding machine presses against the transverse wire length, thereby opening the spring loaded flap **44** and conveying the transverse wire length between the electrodes of the welding machine.

For simplifying the drawing, the transverse wires Q in FIGS. **1** and **2** are shown only in one compartment **22** of the paddle chain **10,** in the intermediate storage chamber **28** and in the threads of the spindles **33** and **42.**

This example of an embodiment according to the invention is of course not restricted to it and various modifications can be employed. For example, in place of the continuous paddle chain a rotating paddle wheel may be used. In place of the threaded spindle for separating the wire lengths it is also possible to use rotating discs with peripheral grooves which cooperate with a stripper. Also with respect to the control of the device, which in the example of the embodiment is pneumatically or hydraulically operated, there are of course also numerous other possible variations.

We therefore wish it to be understood that we do not desire to be limited to the exact details of construction shown and described, for obvious modifications will occur to a person skilled in the art.

Having thus described the invention, what we claim as new and desire to be secured by Letters Patent, is as follows:

1. An apparatus for feeding aligned lengths of wire from a bundle to a processing machine, such as a lattice welding machine,

comprising, in combination:

an inlet means operable to convey and hold the bundle for division into smaller portions;

conveyor means disposed near said inlet means, operable to convey portions of wire away from said inlet means;

divider means associated with at least one of said conveying or inlet means and operable to divide said bundle into portions of wire;

holder-separator means disposed near said conveyor means and being operable to receive the portion of wire from said conveyor means and separate it into individual wires in a predetermined alignment, for conveyance to the processing machine.

2. An apparatus, as claimed in claim **1,** wherein

said conveyor means further includes aligning-quantity control means operable to control the size of the portion of wire and acting to insure that the individual wires in the portion of wire being conveyed, are aligned to within predetermined tolerances; and

said holder-separator means being operable to substantially align the portion of wire received into it.

3. An apparatus, as claimed in claim **2,** wherein said aligning-quantity control means includes a stripper member, disposed above said paddle devices and operable to limit the height of wires held in said compartments above said belt and thereby limit the quantity of wires in each compartment.

4. An apparatus, as claimed in claim **1,** wherein

said inlet means includes a first inclined holding-conveyor means being downwardly inclined from a receiving end and operable to receive a bundle of loose lengths of wire at said receiving end;

said conveyor means including a movable endless belt being disposed adjacent said first holding-conveyor means and having a moving means operable to move it, said belt including spaced apart paddle devices extending away from said belt to form wire retaining compartments on said belt, each retaining compartment having a smaller capacity than said holding-conveyor means, said holding-conveyor means being operable to convey said loose wire lengths into said retaining compartments whereby a portion of the bundled wire will be conveyed from said holding-conveyor means by the movement of said movable belt;

a storage chamber;

said holder-separator means comprising a second downwardly inclined holding-conveyor means operable to receive the wires from said belt and convey them into said storage chamber and a separating member disposed adjacent the wires contained in said storage chamber, operable for separating them into individual wires and conveying the individual wires to the processing machine.

5. An apparatus, as claimed in claim **4,** wherein said endless belt travels in an upward direction over at least part of the conveyance path of the portion of wire from said holding means to said storage chamber, wherein said aligning-quantity control means includes a depth limiting means disposed adjacent said belt and operable to limit the depth to which said portion of wire can be held in each compartment during filling.

6. An apparatus, as claimed in claim **4,** wherein said holder-separator means includes a rigid abutment surface disposed along one edge of said endless belt; and

a pivotable abutment surface disposed opposite said rigid abutment surface along the other edge.

7. An apparatus, as claimed in claim **6,** including a device for pivoting said pivotable abutment surface in a direction toward and away from said rigid abutment surface, in synchronism with the movement of said belt.

8. An apparatus, as claimed in claim **4,** said second holding-conveyor means comprising guide panels disposed near each edge of said belt and having downwardly sloping upper edges forming an inclined path into said storage chamber.

9. An apparatus, as claimed in claim **4,** wherein said belt comprises interlinked L-shaped chain links, whereby part of the L-shape forms said paddle.

10. An apparatus, as claimed in claim **4,** said separating member comprising a first threaded spindle disposed near the bottom of said intermediate chamber.

11. An apparatus, as claimed in claim **10,** said separating member further comprising two threaded spindles operable to receive a single wire from said first threaded spindle and convey it substantially parallel to the processing machine; and

guide walls disposed along said threaded spindles and having upper edges substantially parallel to said threaded spindles, to guide the single wires conveyed by said threaded spindles.

12. An apparatus, as claimed in claim **1,** further comprising moving means for activating said conveying means, and

sensing means for said holder-separator means operable for sensing the quantity of wires and for actuating said moving means to advance said conveying means when the quantity of wires falls below a predetermined level in said holder-separator means.

13. An apparatus, as claimed in claim **12,** said moving means operating in a stepwise manner when activated thereby advancing said conveying means for a predetermined distance.

14. An apparatus, as claimed in claim **12,** wherein said sensing means comprises

first means operable to direct a first stream of gas through said holder-separator means at a predetermined height,

a gas stream receiver including a switch, and

second means operable to direct a second stream of gas towards said switch in said receiver, said switch being actuatable when said second stream impinges thereagainst to actuate said moving means,

said first gas stream flowing in the direction towards said second gas stream in said receiver when the wires are below said predetermined level, to deflect said second gas stream away from said switch.

* * * * *