March 29, 1938. B. L. VAUGHAN 2,112,721

YARN HOLDER

Filed July 6, 1936

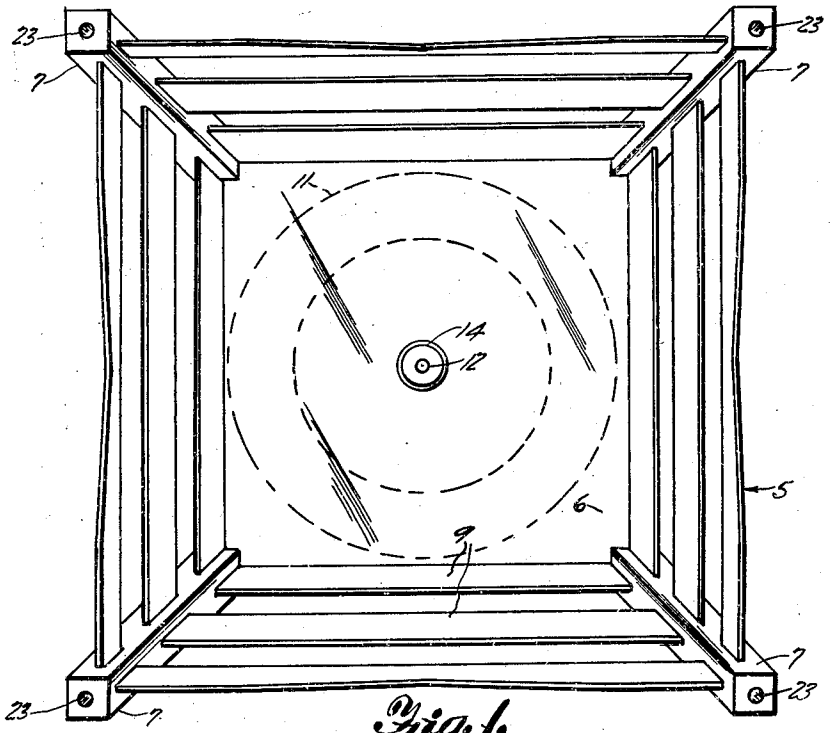

Fig. 1.

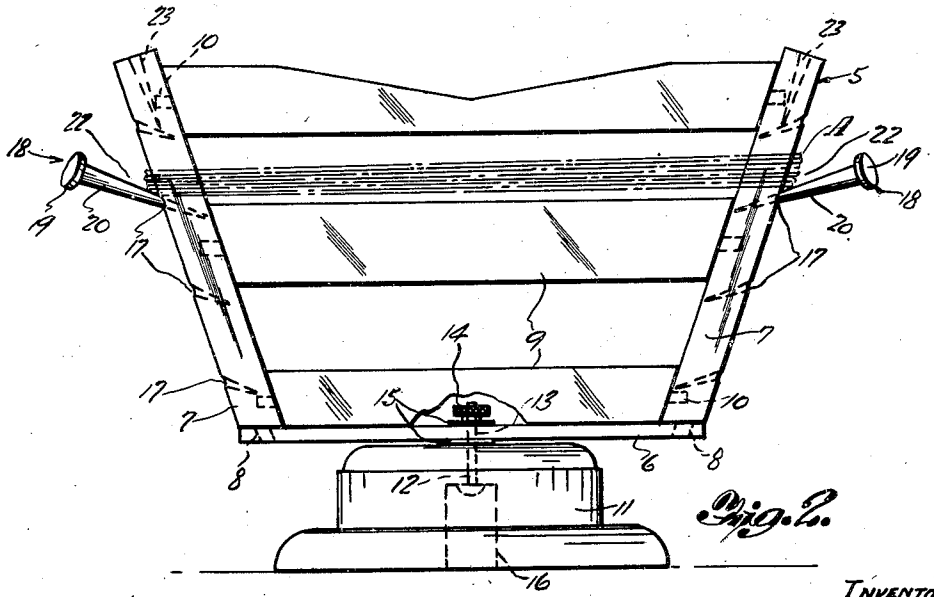

Fig. 2.

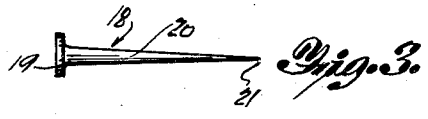

Fig. 3.

INVENTOR
BESSIE LEA VAUGHAN
By Adam E. Fisher
ATTORNEY

Patented Mar. 29, 1938

2,112,721

UNITED STATES PATENT OFFICE

2,112,721

YARN HOLDER

Bessie Lea Vaughan, Joplin, Mo.

Application July 6, 1936, Serial No. 88,941

1 Claim. (Cl. 242—77)

My invention relates to improvements in yarn holders.

The main object of my invention is to provide a rotatable device on which yarn may be wrapped and then fed off as it is wound into balls.

Another object is to provide a device of this kind comprising a basket-like member rotatably seated on a base and including upwardly and outwardly flaring corner posts having sockets along their length into which pegs may be inserted to form channels in which yarn may be wound, the said basket-like member serving also for use as a work or sewing basket when desired.

With these and other objects in view the invention resides in the novel construction and arrangement of parts as hereinafter fully set forth and claimed, reference being had to the accompanying drawing as showing a preferred embodiment of my invention for purposes of exemplification.

In the drawing:

Figure 1 is a plan view.

Figure 2 is a side view.

Figure 3 is a side view of one of the pegs alone.

In carrying out my invention I provide a basket-like body member designated generally at 5 comprising a bottom 6 preferably, but not necessarily, of square shape and having corner posts 7 attached at its corners by dowels 8 and extending upward in outwardly flaring relation therefrom as shown. These posts 7 are joined by spaced side bars 9 forming sides for the body member and these bars are secured to the posts by short dowels or pins 10.

The basket-like member thus formed is mounted atop a base 11 by a screw 12 extended up centrally through the base and loosely through an aperture 13 in the bottom 6, a thumb nut 14 being provided at the upper end of the screw so that the body member and base are connected. Washers 15 are provided above and below the bottom to permit free rotation of the body member 5 on the base 11 and the base is recessed out at 16 at its underside to clear the screw head.

Sockets 17 are formed in vertically spaced relation along the outer sides or corners of the posts 7 and are arranged in horizontal alignment around the body member 5. These sockets taper downwardly and inwardly to their inner ends and open outwardly in an upward direction at their outer ends as shown. A peg 18 is then provided for each post 7 and each peg comprises a head 19 and a shank 20 tapering from the head toward the point 21.

In use the pegs 18 may be inserted by their points 21 into the sockets 17 where the pegs are frictionally held in an upwardly and outwardly extended position as shown and then yarn as shown in broken lines at A may then be wound around the posts 7 above the pegs. The outward inclination of the posts 7 together with the upward inclination of the pegs 18 together form clefts 22 for the reception of the yarn as will be understood. The yarn may then be readily wound into balls and as it is pulled off the body member 5 rotates on the base 11. When not so in use the thumb screw 14 may be turned down tight and the device used as a work or sewing basket. The legs 7 have downwardly extended axial sockets 23 in their upper ends for the reception and storage of the pegs 18 when not in use. Additional pegs (not shown) may be provided for insertion in the sockets 17 when it is desired to wind more than one color or kind of yarn on the device.

While I have herein set forth a certain preferred embodiment of my invention it is understood that I may vary from the same in minor structural details, so as best to provide a practical device for the purposes intended, not departing from the spirit of the invention and within the scope of the appended claim.

I claim:

In a device of the kind described, a basket like member rotatably mounted on a base, the same including a bottom, a plurality of outwardly flared posts extended circumferentially from the bottom, a plurality of side bars horizontally connecting the posts, the posts being pierced along their outer faces by a plurality of transversely aligned and downwardly and inwardly inclined sockets, and a plurality of pegs removably inserted in said sockets, whereby yarn winding clefts are formed between the pegs and the posts with the circumferential extent of the clefts increasing from the bottom to the top of the structure.

BESSIE LEA VAUGHAN.