Jan. 12, 1954 K. ALBRECHT 2,665,465

CUFF LINK

Filed Oct. 14, 1950

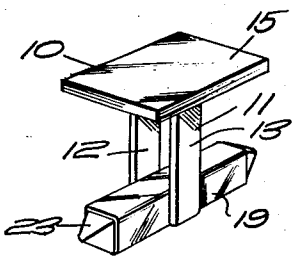

FIG.1

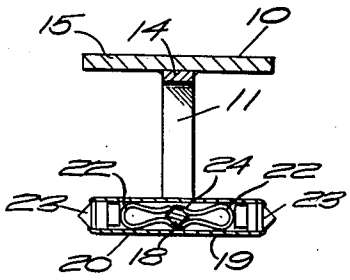

FIG.2

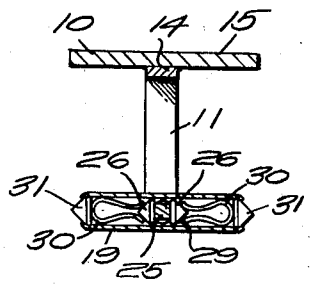

FIG.4

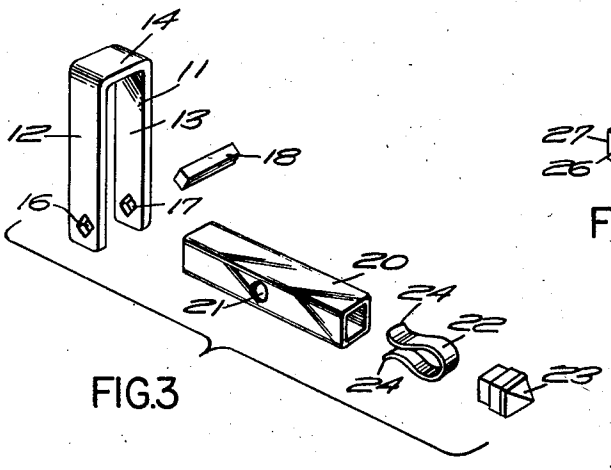

FIG.3

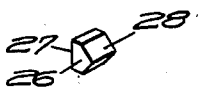

FIG.5

INVENTOR.

BY Karl Albrecht

Nathaniel Finston

ATTORNEY

Patented Jan. 12, 1954

2,665,465

UNITED STATES PATENT OFFICE

2,665,465

CUFF LINK

Karl Albrecht, Maplewood, N. J., assignor to Forstner Chain Corporation, a corporation of New Jersey

Application October 14, 1950, Serial No. 190,219

1 Claim. (Cl. 24—97)

1

The present invention relates to the manufacture of jewelry, and has particular reference to a novel construction for a cuff link.

The principal object of the invention is to provide a novel cuff link having an ornamental head and a movable head, the movable head being selectively snap retained in parallel relation to the ornamental head and at right angles thereto.

Another object of the invention is to provide a novel spring construction for releasably holding the movable head in its selected position.

A further object of the invention is to use a small number of simple parts for a cuff link, which can be readily manufactured and assembled.

With the above and other objects and advantageous features in view, the invention consists of a novel arrangement of parts more fully disclosed in the detailed description following, in conjunction with the accompanying drawings, and more specifically defined in the claim appended thereto.

In the drawings,

Fig. 1 is a perspective view of an illustrative cuff link embodying the invention;

Fig. 2 is a transverse vertical section therethrough, the movable head being shown in parallel relation to the ornamental head;

Fig. 3 is an exploded view showing the detail parts of the cuff link of Fig. 2;

Fig. 4 is a view similar to Fig. 2 showing a modified construction; and

Fig. 5 is a perspective view of the abutment block of Fig. 3.

It has been found desirable to improve the construction of snap action cuff links of the aeroplane type, by providing a more effective spring control for and increasing the spring resistance. To this end, I mount a square pivot rod between the shanks of the center post, for pivotally receiving the movable head, and I position two U-shaped springs in the movable head to engage selective sides of square pivot rod, the engagement being direct or through abutment blocks, whereby the spring ends of the U-springs exert the desired releasable retaining action .

Referring to the drawings, the cuff link 10 includes a center post 11 of U shape, having sides 12, 13 and a base 14 to which an ornamental head 15 is secured, as by soldering. The outer

2

ends of the sides 12, 13 have square openings 16, 17 blanked or formed therein, to accommodate the ends of a square pivot rod 18. A movable head 19 is pivotally mounted on the rod 18 between the sides 12, 13, and includes a hollow box or shell 20 which has circular openings 21 on opposite sides thereof for turning on the rod 18, and U-shaped springs 22 on each side of the rod 18, see Fig. 2, which are held in place by ornamental end closure elements 23, preferably soldered in place and closing the ends of the shell 20.

The springs 22 have their ends 24 bent outwardly, to normally rest on the opposite sides of the rod 18 as shown in Fig. 2, the rod 18 having its sides and the post side openings having its edges angularly positioned with respect to the post, whereby the movable head may be snap turned and releasably locked against the resistance of the spring ends. The snap action is very effective and has long life, as the snap effect results from the engagement of the four spring ends with the four rod sides.

Since the life of the cuff link is dependent on the duration of a substantial snap action, it may be desirable for certain constructions to provide separate wear resisting elements for cooperating with the spring ends. Referring to Figs. 4 and 5, the cuff link is similar to the cuff link of Fig. 2, but the pivot rod 25 has its sides positioned in parallel relation and at right angles to the post as illustrated, the post side openings being correspondingly aligned, and two movable abutments 26 are positioned on the sides of the pivot rod, the abutments having plane ends 27 contacting the rod sides and having sloping or tapered faces 28 for engagement by the spring ends 29 of the U-shaped springs 30, the end closure elements 31 being slightly smaller than the end closure elements 23 of Fig. 2 to compensate for the height of the abutments 26.

Although I have described specific constructional embodiments of my invention, it is obvious that changes in the size, shape and arrangement of the parts may be made to provide cuff links of different designs, without departing from the spirit or the scope of the invention as defined in the appended claim.

I claim:

A cuff link construction comprising a center

post having spaced parallel sides, an ornamental head secured to one end of said post, a pivot rod of square cross-section secured to the other end of said post and extending between the post sides, a hollow movable head pivotally mounted on said rod for turning movement between the post sides, the sides of said rod being angularly disposed with respect to the post, a U-shaped spring in each end of the movable head having its ends directed inwardly and bent to normally contact the contiguous angularly positioned rod sides, and closure elements closing the movable head ends and engaging the U-shaped springs, whereby the springs selectively retain the movable head

in alignment with the post and at right angles thereto.

KARL ALBRECHT.

References Cited in the file of this patent

UNITED STATES PATENTS

Number	Name	Date
2,093,723	Hone	Sept. 21, 1937
2,149,132	Carlson	Feb. 28, 1939
2,177,443	Schupbach	Oct. 24, 1939
2,270,677	Cronan	Jan. 20, 1942
2,548,930	Bagnall	Apr. 17, 1951