March 29, 1960 J. SIMER ET AL 2,930,326

PUMP CONSTRUCTION

Filed Dec. 23, 1955

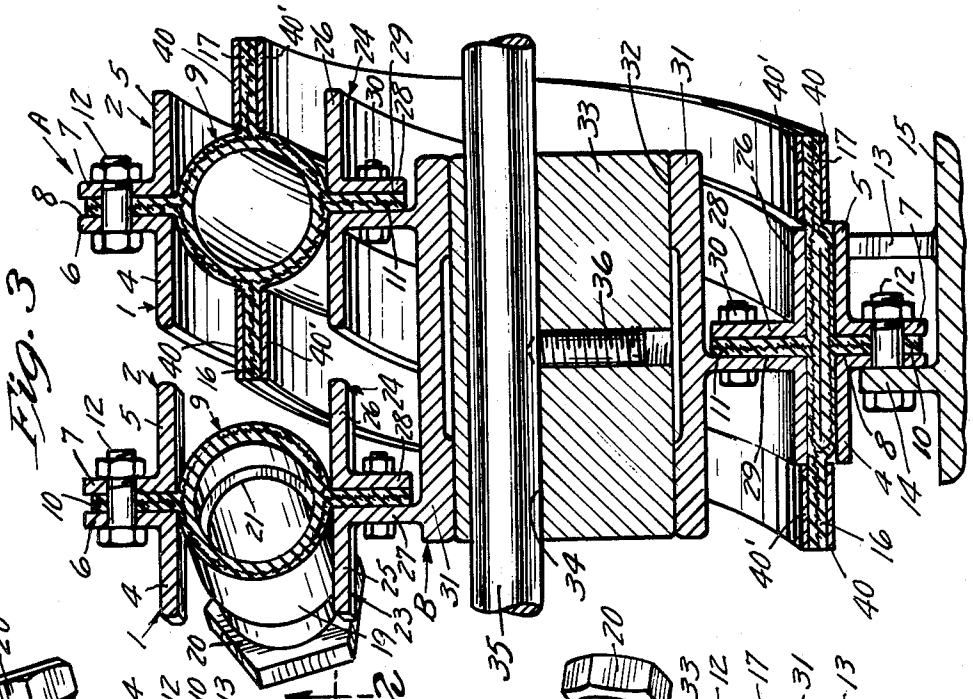

Fig. 3

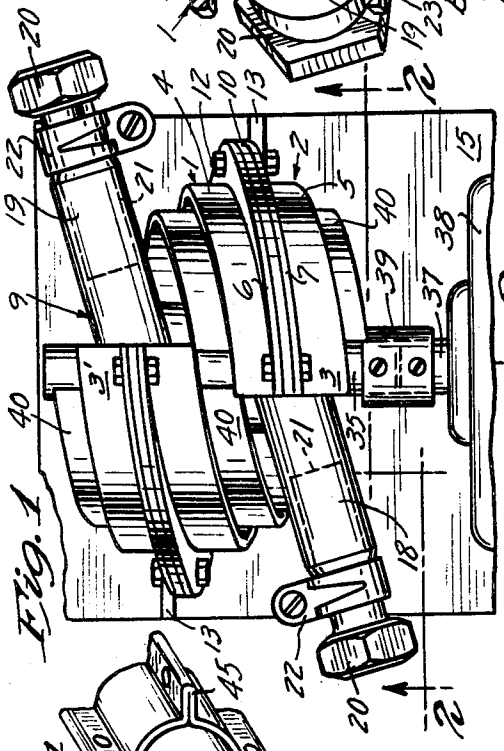

Fig. 1

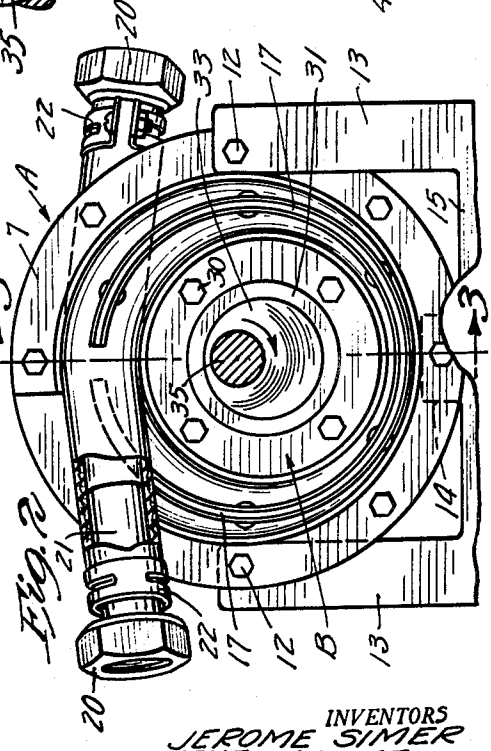

Fig. 2

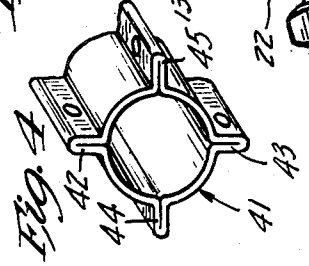

Fig. 4

INVENTORS
JEROME SIMER
HSUE FU LEE
BY
Merchant & Merchant
ATTORNEYS

United States Patent Office 2,930,326
Patented Mar. 29, 1960

2,930,326

PUMP CONSTRUCTION

Jerome Simer and Hsue Fu Lee, Minneapolis, Minn., assignors, by mesne assignments, to said Jerome Simer

Application December 23, 1955, Serial No. 555,045

5 Claims. (Cl. 103—149)

Our invention relates generally to pumps and more specifically to improvements in pumps of the type involving a coiled flexible tube and means for successively collapsing circumferentially spaced portions of the tube whereby to apply pumping pressure within the discharge end portion of the tube and suction to the inlet portion thereof.

Pumps of this type have been heretofore used with varying degrees of success where relatively low pressure was required, and wherein the pump was located relatively close to and at substantially the level of the source of fluid to be pumped. The use of this type of pump has been limited to an extremely small field in the pump art, wherein the requirements of volume and pressure were relatively low. Attempts have been made, without success, to apply this type of pump to uses necessitating the location of the pump at a level considerably above that of the source of fluid. In such applications, difficulty has been encountered in obtaining a tube which would be easily collapsed by a roller or other compressor element moving circumferentially about the coil, but which would resist collapsing due to pressure differential between the interior and exterior of the tube intermediate the compressor element and the inlet end portion of the tube. It has been found that, in order to utilize a tube having walls sufficiently rigid to withstand such pressure differential, the working life of the tube was shortened to a marked degree, inasmuch as the relatively rigid walls would crack or fracture under continuous collapsing thereof by the roller or like compressor. Moreover, pumps of the above type, utilizing one or more rollers to compress or collapse the tube, caused the tube to be placed under excessive wear, further tending to lessen the length of tube life; and the relatively small area of the tube engaged by the roller at any given time caused the tube to be placed under a relatively severe flexing strain.

An important object of our invention is the provision of a pump of the type set forth which is applicable to a wide variety of fluids, and which is capable of creating sufficient suction at the inlet end thereof without collapsing of the tube to enable the pump to be installed at an appreciable height above the source of fluid and at a relatively long distance therefrom.

Another important object of our invention is the provision of a pump of the character herein disclosed comprising a generally cylindrical casing element, a generally cylindrical compressor element contained in the casing element and eccentric thereto, a flexible tube extending circumferentially between said element, and novel means whereby one of said compressor elements is moved in an orbit about the axis of the other thereof but is anchored against rotation on its own axis with respect to the other of said elements and said tube.

Another important object of our invention is the provision of a pump of the above type wherein the flexible tube is made from relatively thin-walled highly flexible material, enabling the same to be used for relatively long periods of time without replacement.

Still another object of our invention is the provision of a pump utilizing a coiled tube and having a novel means for permitting spaced portions of the tube circumferentially of the coil to be successively collapsed in a direction radially of the coil, and for holding portions of the tube diametrically opposite said collapsed portions against collapse such as might be caused by pressure differential between the interior and exterior thereof.

Another object of our invention is the provision of a pump as set forth which is relatively simple and inexpensive to manufacture, which is highly efficient in operation, and which is rugged in construction and durable in use.

The above and still further highly important objects and advantages of our invention will become apparent from the following detailed specification, appended claims, and attached drawings.

Referring to the drawings which illustrate the invention, and in which like reference characters indicate like parts throughout the several views;

Fig. 1 is a fragmentary view in top plan of a pump built in accordance with our invention, and a drive motor therefor;

Fig. 2 is a view partly in side elevation and partly in section taken substantially on the line 2—2 of Fig. 1, some parts being broken away;

Fig. 3 is a vertical section taken on the line 3—3 of Fig. 2, some parts being broken away; and

Fig. 4 is a fragmentary section view in perspective of a modified form of the flexible tube of our invention.

In the preferred embodiment of our invention illustrated in Figs. 1–3, a generally cylindrical casing, indicated in its entirety at A, is shown as comprising a pair of cooperating casing sections 1 and 2 formed to provide one convolution or turn of a helix. As shown in Fig. 1, the opposite ends 3 and 3′ of the casing are disposed in overlapping relationship with respect to the vertical plane of the axis of the casing. The casing sections 1 and 2 include generally cylindrical axially projecting flanges 4 and 5 respectively, and helically extending radially outwardly projecting flanges 6 and 7 respectively, said flanges 6 and 7 defining opposite side walls of a radially inwardly opening channel 8 which extends substantially the entire circular length of the casing sections 1 and 2.

A flexible tube 9 extends generally circumferentially or helically within the casing A and is formed to provide a pair of longitudinally extending, diametrically opposed outer and inner radial flanges 10 and 11 respectively, the former of which is contained in the channel 8 defined by the flanges 6 and 7. A plurality of circumferentially spaced nut-equipped bolts 12 extend through aligned apertures in the flanges 6, 7, and 10 to rigidly anchor the casing sections 1 and 2 and flexible tube 9 together. Preferably and as shown, circumferentially spaced ones of the clamping bolts 12 extend through suitable apertures in outer supporting legs 13 and an intermediate supporting leg 14 which extend upwardly from a supporting base 15, whereby to rigidly support the casing A at a predetermined height above the base 15. The tube 9 is further provided with a pair of longitudinally extending flanges 16 and 17 which project radially outwardly from the tube 9 in opposite directions axially with respect to the casing A. The purpose of the flanges 11, 16 and 17 will be hereinafter described. The flexible tube 9 is preferably made from elastic material such as natural or synthetic rubber, and is shown as being reinforced with woven fabric which permits easy flexing and collapsing of the tube walls, but which restrains the tube against undue expansion due to pressure of fluid therein. Also preferably and as shown, the tube 9 is normally of a circular cross section. However, if desired, the tube 9 may be made without the fabric reinforcing and with different cross sectional shapes, depending upon the volume and

pressure requirements. As shown particularly in Figs. 1 and 2, the flanges **10** and **11** as well as the flanges **16** and **17** terminate substantially at the ends **3** and **3'** of the casing A; and the opposite ends **18** and **19** of the tube **9** extend substantially tangentially outwardly from the ends **3** and **3'** respectively, of the casing A. Said opposite ends **18** and **19** of the tube **9** are shown as being provided with commercially available fittings **20** having tubular stems **21** that are telescopically received in the adjacent end portions of the tube **9**, and held by conventional hose clamps **22**. The fittings **20** are adapted to connect the end portions **18** and **19** to suitable conduit means not shown. Although either end **18** or **19** of the tube **9** may be utilized as the inlet end of the tube, for the purpose of the present example, the end **18** will hereinafter be designated as the inlet end whereas the end portion **19** of the tube **9** will be designated as the discharge end thereof.

A compressor, indicated in its entirety at B, is contained within the casing section A radially inwardly of the tube **9** and eccentric to the casing A and tube **9**. The compressor B comprises a pair of compressor sections **23** and **24** which include generally cylindrical helically extending flanges **25** and **26** respectively, and helically extending radially inwardly projecting flanges **27** and **28** respectively. The flanges **27** and **28** define opposite sides of a radially outwardly opening helically extending channel **29** for the reception of the tube flange **11**. A plurality of circumferentially spaced nut-equipped bolts or the like **30** extend through aligned apertures in the flanges **11**, **27** and **28** to rigidly anchor the flange **11** between the flanges **27** and **28**.

The flange **27** is integrally formed with and projects radially outwardly from an axially extending hub **31** having a bar **32** concentric with the flanges **25** and **26** but eccentric to the flanges **4** and **5** of the casing A. A rotor **33** is journalled for rotation in the bar **32**, and is provided with an axially extending aperture **34** through which extends a shaft **35**. The shaft **35** is held against rotation relative to the rotor **33** by a setscrew or the like **36**. Preferably and as shown, the axis of the shaft **35** is eccentric to the rotor **33** and coincident with the axis of the casing A. The shaft **35** is connected to the drive shaft **37** of a motor **38** by a suitable coupling **39**.

With reference to Figs. 2 and 3, it will be seen that the eccentricity of the compressor B with respect to the casing A is such that when one portion of the flexible tube **9** is collapsed, another portion diametrically opposite the collapsed portion is in a normal expanded condition. Assuming that rotation is imparted to the shaft **35** and the rotor **33** in a clockwise direction with respect to Fig. 2, the inlet end **18** is subject to sub-atmospheric pressure or suction. On the other hand, the opposite end portion **19** of the tube **9** is under pressure from the inside greater than atmospheric pressure. It will be noted that the compressor element B is held against rotation about its own axis by its connection to the casing A through the tube **9** and flanges **10** and **11**. Thus, when rotation is imparted to the rotor **33**, the compressor B partakes of orbital movement about the common axis of the casing A and drive shaft **35**, but no rotation of the compressor B about its own axis takes place. During this orbital movement of the compressor B, circumferentially spaced portions of the tube coil will be successively collapsed by the flanges **25** and **26** of the compressor B whereas diametrically opposed portions of the tube **9** opposite the collapsed portions will be successively expanded to the normal cross sectionally circular shape of the tube by the positive engagement of the flanges **27** and **28** with the tube flange **11**. In other words, the connection between the opposed flanges **10** and **11** and their respective casing and compressor flanges insures expansion of the tube when relatively heavy suction is applied intermediate the compressor collapsed portion of the tube and the inlet end **22** thereof.

For the purpose of permitting collapsing of the tube **9** by the compressor B during its orbital movement but preventing collapse thereof in a direction axially of the casing intermediate the compressor collapsed portion and the inlet end **18**, we provide cooperating pairs of relatively rigid generally circular bands **40** and **40'** that are substantially coextensive with and that are adhered to the radially inner and outer surfaces respectively of the tube flanges **16** and **17**. As shown, the bands **40** and **40'**, like the axially projecting flanges of the casing and compressor, form a convolution of a helix, and each of the bands **40** and **40'** are sufficiently resilient to permit slight variations in the helical pitch thereof during progressive compressor imparted collapsing of the tube **9**. It will be seen, by reference to Fig. 3, that portions of the bands **40** and **40'** of the flange **16** at the collapsed portion of the tube **9** are moved axially away from corresponding portions of the bands **40** and **40'** associated with the flange **17**. The relatively rigid quality of the bands **40** and **40'** tend to cause the portions thereof at the expanded part of the tube opposite that of the collapsed portion thereof to spread apart in like manner, thus preventing collapse of the tube in a direction axially of the casing, which might otherwise occur due to the negative pressure within the tube intermediate the compressor collapsed portion of the tube and the inlet end **18** thereof. Thus the tube **9** is positively held against collapse in either radial or axial directions and a relatively high degree of suction or negative pressure may be achieved in the inlet end **18** of the tube. Furthermore, the above-described arrangement permits the use of a tube having a relatively thin wall with extreme flexibility; and inasmuch as there is no relative rotary movement between the compressor and the tube nor between the tube and the casing, frictional wear on the tube by the other pump elements is avoided. As above indicated the end **19** of the tube may be utilized as the inlet end thereof, while the end **18** thereof may be utilized as the discharge end, it being only necessary that the shaft **35** and rotor **33** be rotated in a counterclockwise direction with respect to Fig. 2.

The modified form of tube shown fragmentarily in Fig. 4 differs from that of Fig. 1–3, in that the modified tube, indicated at **41**, has opposed flanges **42** and **43** that are formed by folding longitudinally extended circumferentially spaced portions of the tube wall along fold lines extending longitudinally of the tube, and anchoring the folded portions into face to face contact. Other opposed flanges **44** and **45**, normal to the flanges **42** and **43**, are similarly formed. Thus, the tube **41** may, if desired, be formed from a length of relatively large diameter tubing or hose. Although the tube **41** is shown as being devoid or reinforcing fabric it may be assumed that this tube, like the tube **9**, may be likewise provided with reinforcing fabric if desired.

By using a natural or synthetic rubber tube in a pump of the type herein set forth, or a tube of material having such rubber-like flexible characteristics, we have been able to pump liquids containing abrasives and other materials which heretofore created considerable damage to metallic pumps due to abrasion and corrosion. Moreover, we have been able to achieve a much higher degree of suction in the inlet end of the pump with considerably longer pump life than has heretofore been attained in pumps of this general character.

While we have shown and described a commercial embodiment of our novel pump structure, and one modified form, it will be understood that the same is capable of further modification without departure from the spirit and scope of the invention as defined in the claims.

What we claim is:

1. In a fluid pump, a generally cylindrical casing element, a flexible tube extending circumferentially about the inner surface of said casing element, the ends of said tube extending outwardly from said casing element, a generally cylindrical compressor element mounted in

said casing element eccentric thereto and to said tube, means for imparting orbital movements to one of said elements about the axis of and relative to the other of said elements whereby to successively collapse circumferentially spaced portions of said tube in a direction radially with respect to said casing element, means on said tube and elements for anchoring said elements and tube against rotary movement relative to each other during said orbital movement, and means for holding said tube against collapse in a direction axially of said elements, said last-mentioned means comprising a pair of relatively rigid helical reinforcing bands secured to said tube between said casing element and compressor element and projecting radially outwardly therefrom in a direction axially of said elements.

2. In a fluid pump, a generally cylindrical casing defining a radially inwardly opening circumferentially extending channel, a generally cylindrical compressor contained within said casing eccentric thereto and defining a radially outwardly opening channel extending circumferentially thereof, a flexible tube extending generally circumferentially of said casing and compressor, said tube having a pair of diametrically opposed radial flanges extending longitudinally thereof, each of said flanges being anchored in a different one of said channels, said tube having a second pair of diametrically opposed longitudinally extending radial flanges substantially normal to said first-mentioned flanges, a pair of relatively rigid generally circular bands each coextensive with one of the flanges of said second pair and rigidly anchored in face to face relationship with a different one thereof, and means for imparting orbital movement to said compressor about the axis of said casing to successively collapse circumferentially spaced portions of said tube in a direction radially of said casing and to simultaneously successively expand portions of said tube diametrically opposite the collapsed portions thereof, said bands holding said expanded portions of the tube against collapse in a direction axially of said casing.

3. The structure defined in claim 2 in which each of the flanges of said pairs thereof comprises a longitudinally extended portion of the wall of said tube folded along fold lines extending longitudinally of the tube to provide cooperating pairs of flange sections, said flange sections being secured together in face to face contact.

4. The structure defined in claim 2 in which said compressor is provided with an axial bore, and in which said means for imparting orbital movement to said compressor comprises an eccentric rotor journalled in the bore, the axis of rotation of said rotor being coincidental with the axis of said casing.

5. In a fluid pump, a generally cylindrical casing element, a flexible tube extending circumferentially about the inner surface of said casing element, the ends of said tube extending outwardly from said casing element, a generally cylindrical compressor element mounted in said casing element eccentric thereto and to said tube, means for imparting orbital movements to one of said elements about the axis of and relative to the other of said elements whereby to successively collapse circumferentially spaced portions of said tube in a direction radially with respect to said casing element, means on said tube and elements for anchoring said elements and tube against rotary movement relative to each other during said orbital movement, and means for holding said tube against collapse in a direction axially of said elements, said last-mentioned means comprising a relatively rigid reinforcing device engaging said tube between said casing element and said compressor element and projecting radially outwardly therefrom in a direction axially of said elements.

References Cited in the file of this patent

UNITED STATES PATENTS

2,251,235	Weydell	July 29, 1941
2,414,355	Bogoslowsky	Jan. 14, 1947
2,693,766	Seyler	Nov. 9, 1954