Feb. 8, 1944. J. H. OWENS 2,341,116

HYDRAULIC FLUSH VALVE MECHANISM

Filed June 3, 1943

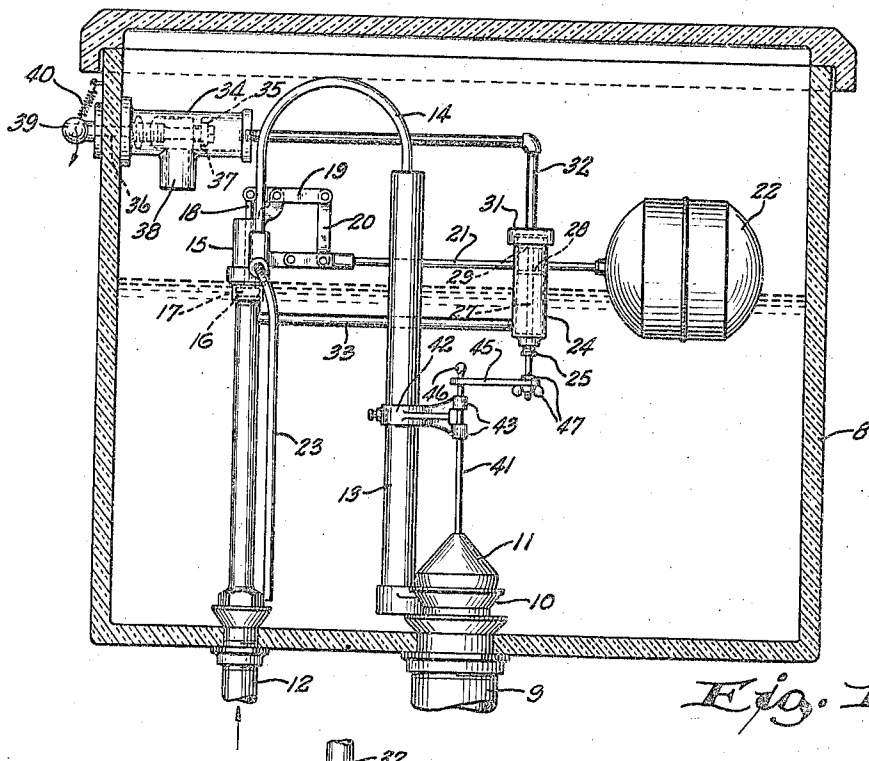

Fig. 1.

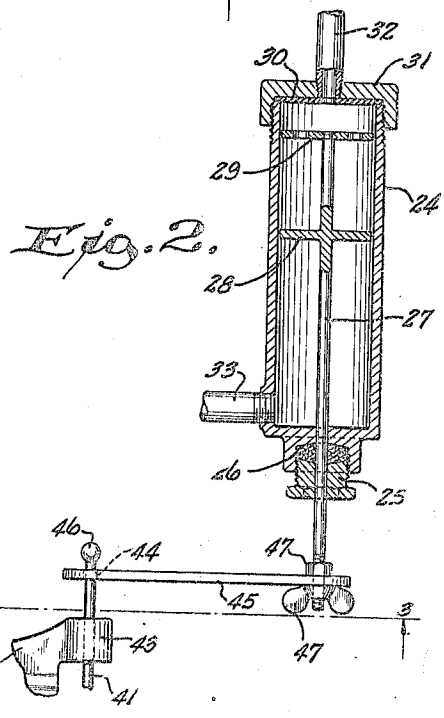

Fig. 2.

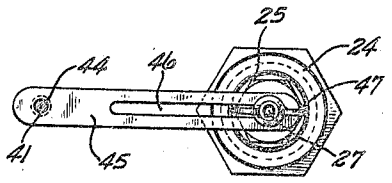

Fig. 3.

INVENTOR.

BY John H. Owens,
Morsell & Morsell
ATTORNEYS.

Patented Feb. 8, 1944 2,341,116

UNITED STATES PATENT OFFICE

2,341,116

HYDRAULIC FLUSH VALVE MECHANISM

John H. Owens, Racine, Wis.

Application June 3, 1943, Serial No. 489,488

2 Claims. (Cl. 4—41)

This invention relates to improvements in hydraulic flush valve mechanisms.

Flush valve mechanisms are customarily employed in the flush or water tanks of toilets or water closets. The tank contains a supply of water which may be discharged through a valve-controlled outlet pipe to flush the toilet bowl. Unseating the valve is effected, in the usual structures, by connecting links and levers which extend to and are operated by a manual crank handle swingably mounted on an exterior portion of the water tank. The conventional flush valve operating mechanisms referred to are entirely mechanical and due to the various connections therein are somewhat haphazard in operation because of lost motion and the tendency of the parts to stick or bind.

It is, therefore, a primary objective of the present invention to overcome the objections inherent to the conventional flush valve mechanisms by providing an hydraulic flush valve mechanism which is positive, quick and responsive in its actions, and which is motivated by the liquid supplied to the flush tank of the structure.

A further object of the invention is to provide an hydraulic flush valve mechanism with which the ordinary water closet flush tank may be equipped with little modification, and which utilizes a minimum of parts, many of which are presently standard.

A further object of the invention is to provide an hydraulic flush valve mechanism, which, because of its hydraulic actuation and control, eliminates mechanical parts and connections which are apt to get out of adjustment and repair, the parts of the improved hydraulic flush valve mechanism being susceptible of easy access for adjustments, repairs and replacements should the same become necessary.

A further object of the invention is to provide an hydraulic flush valve mechanism which is of very simple construction, is strong and durable, is efficient and positive in its operation, is inexpensive to manufacture and install, and is well adapted for the purpose described.

With the above and other objects in view the invention consists of the improved hydraulic flush valve mechanism, and its parts and combinations, as set forth in the claims, and all equivalents thereof.

In the accompanying drawing in which the same reference characters indicate the same parts in all of the views:

Fig. 1 is a vertical longitudinal sectional view through the water tank of a toilet showing the improved hydraulic flush valve mechanism;

Fig. 2 is an enlarged, fragmentary, detail view of a cylinder and hydraulically operated piston and its associated parts forming part of the improved mechanism, the cylinder being shown in vertical section; and

Fig. 3 is a detail view taken on line 3—3 of Fig. 2 with the valve rod being shown in section.

Referring now more particularly to the drawing it will appear that the flush or water tank of a toilet installation is indicated by the numeral 8. The tank, of conventional structure, is of rectangular form in horizontal section, and is enclosed. Extending into a central bottom portion of the tank is a relatively large diameter outlet or water discharge pipe 9 whose open end portion within the lower portion of the tank is provided with a valve seat 10 to receive a movable valve 11. In actual practice the discharge pipe 9 extends to and opens into the bowl of a toilet or water closet structure (not shown) to discharge water from the tank into said bowl for flushing purposes.

As is common in flush tank structures a water supply pipe 12 extends vertically through a lower portion of the tank 8 and terminates in an upper interior portion of the tank, said supply pipe 12 being spaced from another pipe 13 which connects with the discharge pipe 9 below the valve 12, the pipe 13 serving as an overflow and relief for water accumulated in the upper portion of the supply pipe 12 by means of a connecting curved tube 14. Exteriorly of the tank 8 the supply pipe 12 extends to a suitable source of water supply (not shown) under pressure.

The upper end portion of the supply pipe 12 is formed as a chamber 15 having its base portion formed with an internal valve seat 16 controlled by a vertically movable valve 17 carried by the lower end of a valve rod 18. The structure of the pipe 12, valve 17 and valve operating mechanism is conventional, the latter comprising suitably mounted articulated links 19 and 20 and a lever arm 21. At the free end of the pivotal lever arm 21 there is a ball float 22 adapted to rise and fall with the level of the water within the tank 8 and to thereby, through the members 18, 19, 20 and 21, unseat and seat the valve 17. The inlet end of a drop tube 23 enters the chambered portion 15 of the pipe 12 above the valve 17. Hence, water from the source of supply is admitted to the drop tube 23 when the valve 17 is open. The drop tube discharges into the lower portion of the tank 8 and is for the purpose of replenishing the supply of water in the tank up to a certain level,

after discharge of the tank contents through the discharge pipe 9.

Suitably supported relatively centrally and in an elevated position within the tank 8 is a vertical cylinder 24. Through the base of the cylinder which is equipped with a packing nut 25 and packing 26 a piston rod 27 vertically reciprocatably extends. Carried fast by the piston rod within the cylinder is a piston 28 of a diameter to afford clearance relative to the internal wall of the cylinder so that water may seep past the piston. An extension of the piston rod carries a perforated stop disc 29 adapted to abut against a cushioning pad 30 within a cap 31 removably closing the upper end of the cylinder. Thus, the abutment of the disc 29 with the pad 30 limits the upward movement of the piston 28 and rod 27. The apertured nature of the stop disc 29 permits water forced through the cylinder to pass the disc. One end portion of a small diameter pipe 32 enters the cap 31 and affords communication with the upper end of the cylinder. The lower inner end portion of the cylinder 24 is connected by a small diameter pipe 33 with the water supply pipe 12 at a point below the valve 16.

Mounted against an inner upper wall portion of the tank 8 is a valve casing 34 into one end of which the pipe 32 extends. A valve 35 carried by the inner end of a turnable valve stem 36 controls a port 37 whereby the flow of water from the pipe 32 to a depending, integral discharge spout 38 is controlled. The valve stem 36 is suitably mounted to extend through the tank wall and its outer free end carries fast thereon a manipulating lever 39 which, after being manually depressed or moved to open the valve 35, is automatically returned to closing position by a spring 40, the latter being schematically shown in the drawing.

The large valve 11 for the control of the tank discharge pipe 9 is carried by the lower end of a vertical rod or stem 41. For the reciprocatable support of the latter it is convenient to adjustably affix a clamping bracket 42 to the pipe 13 at a suitable elevation from the valve seat 10. The bracket 42 is provided with outwardly projecting bored bosses 43 through which the stem 41 slidably extends. The upper end portion of said stem also slidably passes through an aperture 44 in the adjacent end of a connecting plate 45. The upper end of the stem 41 is formed with a knob 46 for abutment with the plate 45 upon an elevation of the cylinder piston rod 27 for lifting the stem 41 and unseating the valve 11.

The lower end of the piston rod 27 depends from the cylinder 24 and is adjustably extended through an elongated slot 46 in the other end of the connecting plate 45. Adjustable securement of the depended end of the piston rod within the plate slot is effected by means of a pair of nuts 47.

The operation of the improved hydraulic flush valve mechanism should be obvious from the foregoing description. Normally the tank 8 is filled with water to about the level indicated in Fig. 1. The water level maintains the ball float 22 and lever arm 21 as shown and the valve 17, controlling water flow into the chambered portion 15 of the pipe 12 is closed, preventing the addition of water to the tank. It should also be noted that the main discharge valve 11 is seated and that the valve 35 controlling discharge through the spout 38 from the cylinder 24 and the pipe 32 is closed. There is, therefore, an equalization of water pressure against the piston 28 and it is thereby maintained in the normal lowered position illustrated.

If it be desired to discharge water from the tank 8 to flush equipment to which the discharge pipe 9 extends, it is only necessary for the operator to momentarily, manually depress the operating lever 39. This action will move the valve 35 to open the port 36 allowing water in the connections to discharge into the tank through the spout 38. The discharge of water thus effected lowers the pressure against the top face of the piston 28 so that there is then unequal pressure on the piston and it will be forced upwardly in its cylinder 24, the movement being limited by contact of the stop disc 29 with the top pad 30. The raising of the piston causes an upward reciprocation of the piston rod 27. The latter carries at its lower end the connecting plate 45 whose outer end then slides upwardly on the valve stem 41 to engage the knob 46 and further lifting of the piston rod will then cause the plate 45 to lift the valve stem 41 to a predetermined extent thereby raising and unseating the main discharge valve 11 relative to its seat on the discharge pipe 9. The valve 11 is of the conventional semi-buoyant type and remains in a water supported position above the valve seat until the water in the tank reaches a low level and suction returns the valve 11 to its seated position. Obviously when the valve 11 is unseated and elevated water from the tank 8 discharges therefrom through the outlet pipe 9 to perform its equipment flushing function. During discharge of water from the tank the water level therein drops, lowering the ball float 22. The dropping of the float causes a downward pivotal movement of the lever arm 21 and ultimately such movement, through the connections 20, 19 and 18 will unseat the valve 17 allowing water to flow from the inlet pipe 12 into and through the tank replenishing drop tube 23.

Only momentary pressure on the operating lever 39 is necessary. Upon release of pressure thereon the spring 40 will return the valve parts to normal closing position so as to prevent further jetting of water through the spout 38. The momentary relief of pressure in the line 32 was, however, sufficient to cause the elevation of the piston 28 previously described with the corresponding elevation of the connecting plate 45 and valve stem 41. Upon the closing of the valve 35 water under pressure flows from the inlet pipe 12 through the connection 33, through the cylinder 24 and past the piston 28 and disc 29 to completely refill the upper connection 32 and the chambered portion of the valve casing 34 thereadjacent. A recoil action takes place which then drops the piston, piston rod and associated connections to the positions illustrated and equalizing pressures on both faces of the piston are reestablished to maintain the parts in the last-mentioned position. Before the water in the tank reaches a predetermined low level and upon return of the piston and piston rod to normal position, the buoyant nature of the valve 11 maintains it and its stem 41 elevated but the free end of the plate 45 may slide downwardly on the valve stem 41 away from the knob 46, during lowering movement of the piston rod 27.

As previously mentioned, when the water level in the tank 8 reaches a low level such action together with suction in the pipe 9 will cause the main valve 11 to drop and seat and thus terminate further water discharge from the tank 8,

which completes the flushing operation. The drop of said valve 11 will pull with it the stem 41, the latter being free to slide in the bosses 43 of the bracket 42 and in the apertured end of the plate 45. Of course at this stage due to the lowered position of the ball float 22 the inlet pipe valve 17 will be open and water will flow into the tank through the tube 23. The water level in the tank will now gradually rise and when the ball float 22 attains a predetermined elevation, through the connections previously described the supply pipe valve 17 will be automatically closed terminating further replenishing of the water contents of the tank. Everything is then as illustrated, ready for a reflushing operation.

It should be noted that the actuation of the main flush tank valve 11 is accomplished by hydraulically operated means which are simple, effective and positive in operation. Available water flowing through the supply pipe 12 is utilized as the hydraulic medium. The mechanism is not open to the objections inherent to the conventional mechanical flush valve mechanisms and will function without service or difficulty for exceedingly long periods. The improved hydraulic flush valve mechanism is furthermore inexpensive and novel, and is well adapted for the purposes described.

What is claimed as the invention is:

1. In combination, a liquid tank, an outlet pipe therefor, a movably mounted discharge valve controlling said outlet pipe, a liquid inlet pipe entering said tank for replenishing the same, float valve means controlling the discharge end of said inlet pipe, a conduit system filled with liquid, a reciprocatable member within an intermediate portion of said conduit system against which the liquid reacts, a liquid connection between the liquid inlet pipe and one end of the conduit system to maintain the latter constantly filled with liquid, manually controlled valve means in the other end of the conduit system to exhaust liquid therefrom to vary the liquid pressure relative to the reciprocatable member, and motion transmitting connections between the reciprocatable member and said discharge valve.

2. Manually controlled flush valve mechanism for a tank adapted to contain a body of liquid, comprising an outlet pipe extending from a lower portion of the tank through which liquid from the tank is selectively discharged for equipment flushing purposes, a movably mounted discharge valve within the tank controlling said outlet pipe, a liquid inlet pipe entering said tank for replenishing the same, float valve means automatically controlling the discharge end of said inlet pipe, an elongated conduit within the tank and constantly filled with liquid and connected at one end with an intermediate portion of said liquid inlet pipe, a cylinder within an intermediate portion of said conduit, a reciprocatable piston within the cylinder against both faces of which liquid in the conduit reacts, said piston having a piston rod extending externally of the cylinder, a valve controlling the other end of the conduit to exhaust liquid therefrom to vary the liquid pressure in the conduit relative to the piston, manually manipulatable operating means for the last mentioned valve extending externally of the tank, and motion transmitting connections between the piston rod and the discharge valve.

JOHN H. OWENS.