I. A. WEAVER.

AUTOMOBILE JACK.

APPLICATION FILED MAY 22, 1916.

1,211,373. Patented Jan. 2, 1917.

2 SHEETS—SHEET 1.

Fig. 1

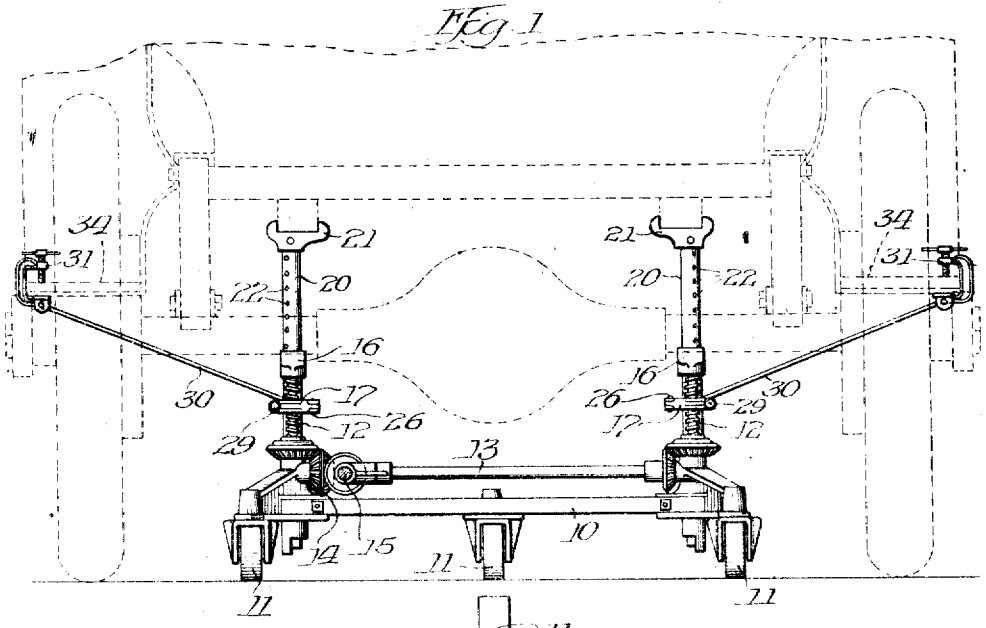

Fig. 2

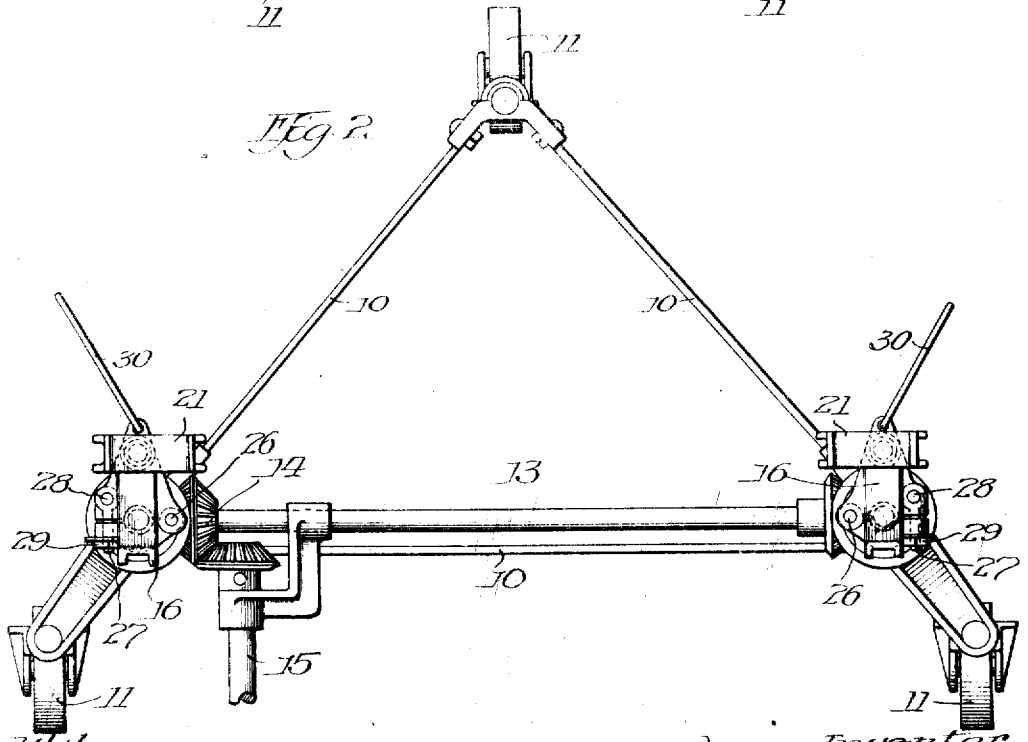

Witnesses:

Geo. C. Davison

C. F. Morrey

Inventor

Ira A. Weaver

By C. Edwin Thomas

Atty.

I. A. WEAVER.

AUTOMOBILE JACK.

APPLICATION FILED MAY 22, 1916.

1,211,373. Patented Jan. 2, 1917.

2 SHEETS—SHEET 2.

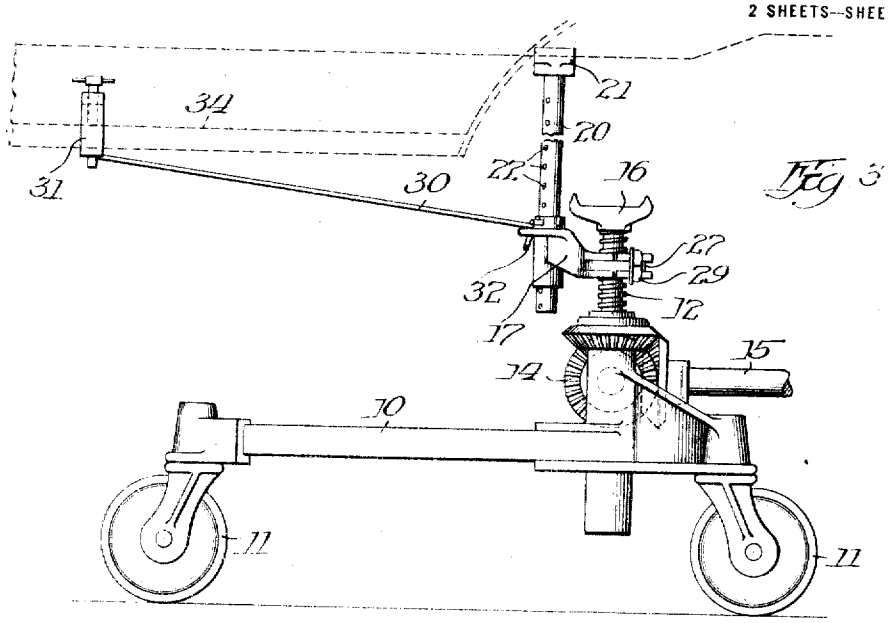

Fig 3

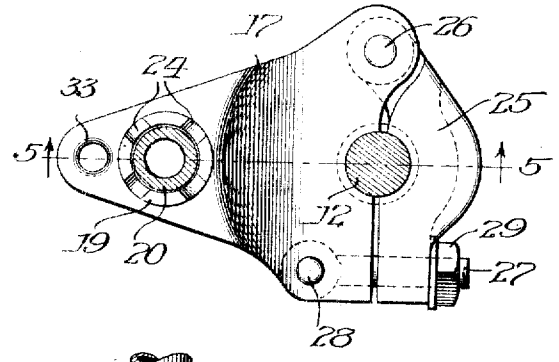

Fig 4

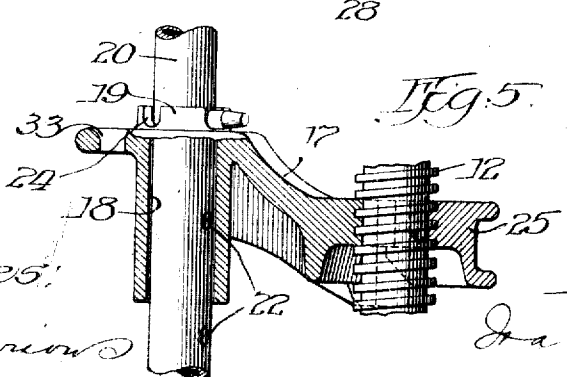

Fig 5.

Witnesses:

Fred. Davison

C. V. Morrow

Inventor

Ira A. Weaver

By C. C. Linthicum

Atty.

UNITED STATES PATENT OFFICE.

IRA A. WEAVER, OF SPRINGFIELD, ILLINOIS.

AUTOMOBILE-JACK.

1,211,373. Specification of Letters Patent. Patented Jan. 2, 1917.

Application filed May 22, 1916. Serial No. 99,072.

To all whom it may concern:

Be it known that, I, IRA A. WEAVER, a citizen of the United States, and resident of Springfield, in the county of Sangamon and State of Illinois, have invented certain new and useful Improvements in Automobile-Jacks, of which the following is a specification.

My invention relates to jacks, and has particular reference to a novel extension or attachment to a jack of the type illustrated in my Patent No. 1,114,829, of October 27, 1914.

An object in the present construction is to provide means adapted to be applied to an automobile jack whereby the extensible standards of the jack are lengthened, to the end that the standards may engage the frame or body of the car and lift the same independently of the axle. A construction having the same object in view is disclosed and claimed in my Patent No. 1,088,049 of February 24, 1914. An advantage in the present construction, however, is in that the extensions of the standard are secured directly to the jack standard, the securing means being of very simple form. By this means several of the parts of the device heretofore referred to have been eliminated without detracting in any manner from the effectiveness of the device. In addition, I have provided a brace rod adapted to be secured to the standard and to extend to a rigid portion of the car which is being supported, in order to act as a brace and obviate the possibility of upsetting or overbalancing the jack.

The invention will be more readily understood by reference to the accompanying drawings, wherein—

Figure 1 is an elevation of a jack constructed in accordance with my invention, the same being shown in association with a portion of an automobile; Fig. 2 is a plan view of the jack; Fig. 3 is a side elevation of the construction as shown in Fig. 1; Fig. 4 is a sectional view, showing in detail one of the clamps, the main and extension standards being shown in section, and Fig. 5 is a section on the line 5—5 of Fig. 4.

In the drawings, it will be seen that the jack of my invention comprises a triangular frame 10, having wheels 11 at three corners thereof. At two of the corners I provide threaded standards 12 adapted for simultaneous actuation by the shaft 13, miter gears 14 and operating shaft 15. At the upper end of the standards are mounted the feet 16, which are intended to engage the axle of an automobile. However, when it is desired to lift the body of the automobile without the axle, it is necessary to provide an extension to the standard 12 and this I accomplish in the following manner. As the devices which are applied to each of the standards are duplicates I will describe but one thereof. A bracket member 17 is provided with a vertical aperture 18 and a notched vertical flange 19 surrounding the aperture at the upper end. Within this aperture an extension standard 20 is accommodated, the upper end of which is surmounted by a foot 21, similar to the foot 16, and adapted to engage a portion of the frame or body of an automobile as shown in Fig. 1. As a means for adjusting the height of a standard and holding the same in adjusted position, I provide apertures 22 in the extension standard and pass a pin 23 through one of said apertures, the pin lying in the notches 24 formed in the vertical flange 19. As a means for securing the bracket member to the threaded standard, I provide a clamp including the arm 25, pivoted at 26 to an apertured lug on the casting 17, the clamping element comprising a bolt 27, pivoted at 28 to another portion of the casting and adapted to swing into engagement with the forked end of the arm 25 and be rigidly held by means of a nut 29. A threaded aperture is provided between the bracket member and the arm, one half of said aperture being in each of said members. The pitch of the threads in this aperture is the same as that of the threads on the standard 12. Therefore, the brackets may be engaged with the standard and swung into the proper position, whereupon the clamp is tightened and the brackets held rigidly in a fixed position.

As it frequently is desirable to elevate a car body and thereafter remove the axle and wheels, as well as move the car about after having removed the axles and wheels, I provide means which tend to obviate the possibility of tipping over the jack. To this end I provide a brace rod 30, having a clamp 31 at one end and a hook 32 at the other end. The hook 32 is adapted to engage an apertured ear 33 on the bracket member 17, while the clamp 31 is adapted to engage the running board 34, or some similar part of the

automobile body. By this means the danger of tipping the jack is obviated.

An advantage in the present construction is in that the standard is fixed to the threaded standard of the jack in the most convenient manner without regard to the other standard or without regard to the differential casing or other portions of the axle. The constructions has many advantages which will be apparent to those skilled in the art, and it is obvious that modifications may be made therein. Such modifications as are within the scope of my claims I consider within the spirit of my invention.

By reason of the construction of the clamp and the fact that the support for the standard 20 is laterally offset with relation to the axis of the screw threaded standard 12, the space between adjacent standards 20 may be adjusted by swinging the clamps on the threaded standards. The position of the feet 21 is determined by rotating the standard 20 in its socket.

I claim:

1. In a jack, the combination of a threaded standard, a bracket adapted to be clamped to the threaded portion of said standard, and a second standard mounted in said bracket with means for vertically adjusting said last mentioned standard, substantially as described.

2. In a jack, the combination of a threaded standard, means for raising and lowering said standard, a clamp adapted to engage the threaded portion of said standard, an apertured extension from said clamp, and a second standard mounted in said aperture with capacity for vertical adjustment, substantially as described.

3. In a jack, the combination of a threaded standard, a bracket having a vertical aperture, a clamp associated with said bracket and adapted to engage the threaded portion of said standard, an extension standard adapted to occupy the aperture in said bracket, and a brace-rod extending from said bracket to the article to be supported by said jack, substantially as described.

4. In a device of the class described, the combination of a casting having a vertical aperture therein and provided with an apertured lug, an arm hinged to said lug, screw means for engaging and holding said arm, a threaded aperture being provided between said extension and said arm, one-half of said threaded aperture being in each of said portions, said threaded aperture being adapted to engage the threaded standard of a jack, and an extension standard adapted to occupy the first named aperture in said casting, substantially as described.

5. In a device of the class described, the combination of a member having a vertical aperture, an apertured ear and an apertured lug, a clamping member associated with said apertured lug whereby said member may be attached to a vertically adjustable portion of a jack, and a brace-rod adapted to be secured to said apertured ear, substantially as described.

6. In a jack, the combination of a threaded standard, a bracket adapted to be clamped to the threaded portion of said standard, and a second standard mounted in said bracket with means for vertically adjusting said last mentioned standard, said bracket being rotatable about said threaded standard as an axis, substantially as described.

7. In a jack, the combination of a pair of standards, means for vertically adjusting said standards, a pair of brackets, one of which is adapted to be secured to the threaded portion of each of said standards, said brackets being each provided with a vertical aperture which is eccentric to the point of attachment of the bracket to said threaded standard, said brackets being mounted for rotation on the standard, and extension standards mounted in the vertical apertures of said brackets and provided with means for securing a vertical adjustment of said extension standards relative to said brackets, the arrangement being such as to provide for adjusting said extension standards toward and from each other by rotating one thereof about the threaded standard to which it is connected, substantially as described.

Signed at Springfield, Ill., this 15 day of May, A. D. 1916.

IRA A. WEAVER.

Witnesses:
H. C. BENNETT,
H. E. JABUSCH.