F. RAUSCH.

RACK FOR MAIL SACKS.

APPLICATION FILED AUG. 5, 1912.

1,068,448.

Patented July 29, 1913.

2 SHEETS—SHEET 1.

Fig. 1.

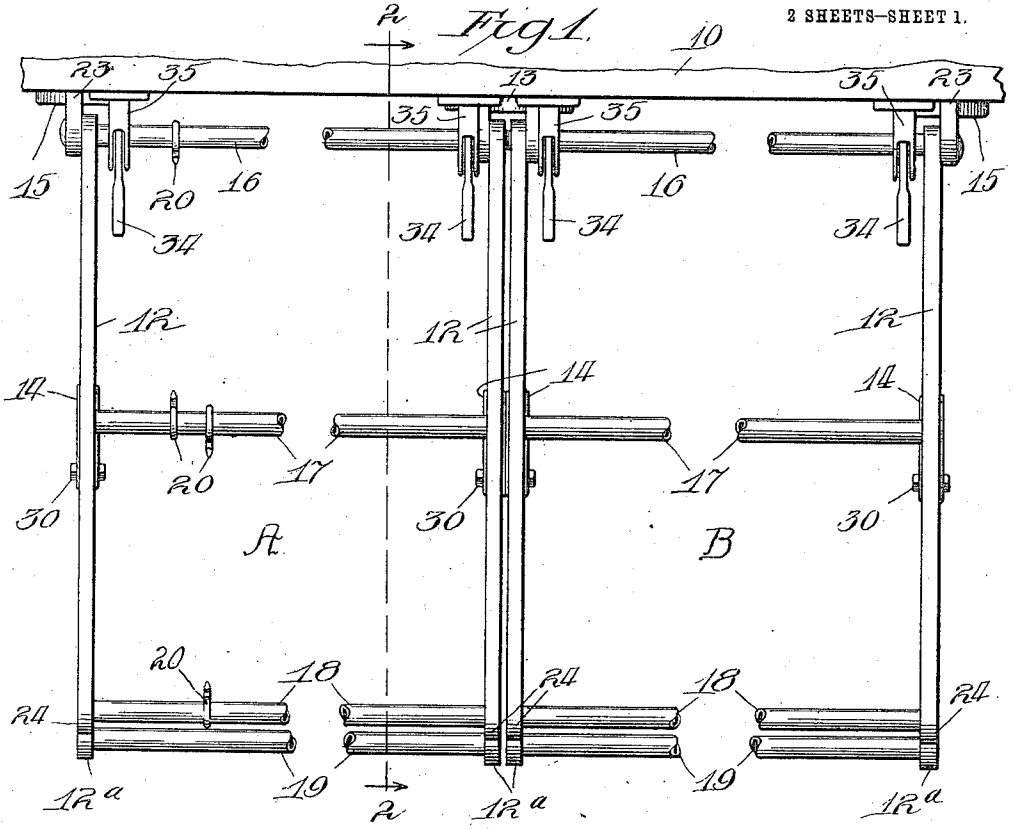

Fig. 4.

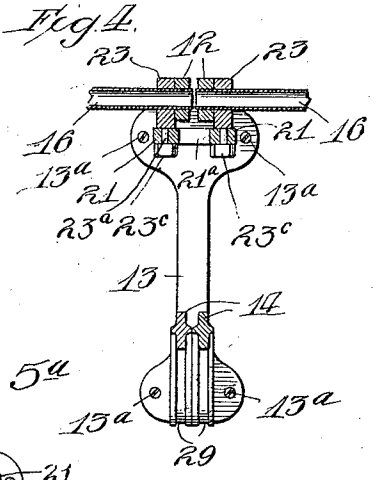

Fig. 5.

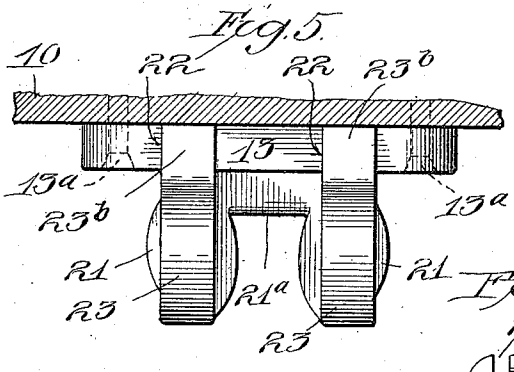

Fig. 5a.

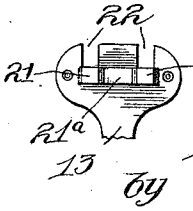

Witnesses:

Harry S. Gaither

Chas. H. Poole.

Inventor:

Fred Rausch

by Poole & Cromer

Atty's

COLUMBIA PLANOGRAPH CO., WASHINGTON, D. C.

F. RAUSCH.

RACK FOR MAIL SACKS.

APPLICATION FILED AUG. 5, 1912.

1,068,448.

Patented July 29, 1913.

2 SHEETS—SHEET 2.

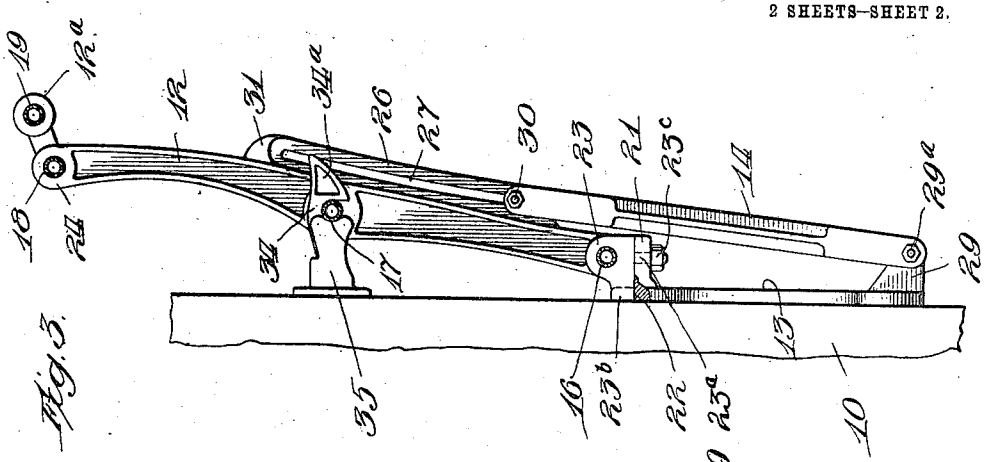

Fig. 3.

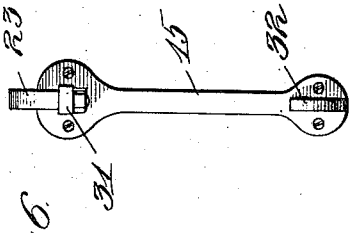

Fig. 6.

Fig. 2.

Witnesses:
Harry S. Gaither
Clinton Poole.

Inventor.
Fred Rausch
by Poole & Crowner
Atty's

COLUMBIA PLANOGRAPH CO., WASHINGTON, D. C.

UNITED STATES PATENT OFFICE.

FREDERICK RAUSCH, OF CHICAGO, ILLINOIS, ASSIGNOR OF ONE-HALF TO JOSEPH DAVIS, OF CHICAGO, ILLINOIS.

RACK FOR MAIL-SACKS.

1,068,448. Specification of Letters Patent. Patented July 29, 1913.

Application filed August 5, 1912. Serial No. 713,274.

To all whom it may concern:

Be it known that I, FREDERICK RAUSCH, a citizen of the United States, and a resident of Chicago, in the county of Cook and State of Illinois, have invented certain new and useful Improvements in Racks for Mail-Sacks; and I do hereby declare that the following is a full, clear, and exact description thereof, reference being had to the accompanying drawings, and to the letters of reference marked thereon, which form a part of this specification.

This invention relates to improvements in mail-sack-supporting racks and particularly relates to improvements in that class of mail-sack-supporting racks especially designed for use in mail-cars or similar vehicles for supporting a plurality of mail-sacks, into which mail is distributed according to the intended destination of the several different sacks.

It is the object of this invention to provide an improved construction for a device of the class described by which are eliminated undesirable features of the various forms of devices for the same purpose now in use and which embodies features that greatly increase the efficiency of mail-car service, as will be fully pointed out in the following parts of this specification.

The invention consists in the matters hereinafter described and more particularly pointed out in the appended claims.

In the drawings, Figure 1 is a top plan view of my improved mail-sack-supporting rack attached to the side wall of a mail-car, showing two similar sections of the same; Fig. 2 is a cross sectional view taken on line 2—2 of Fig. 1, with a detail view of a retaining hook, forming part of the device; Fig. 3 is a view similar to that of Fig. 1 with the rack shifted to its lifted position, occupied thereby when not in use; Fig. 4 is a vertical section taken on line 4—4 of Fig. 2; Fig. 5 is an enlarged detail plan view of the double supporting bracket and removable bearing blocks therein; Fig. 5^a is a detail view of the top part of the bracket shown in Figs. 4 and 5; Fig. 6 is a detail view of a single supporting bracket.

Referring to the drawings, the racks are secured to the side walls 10 of a mail-car and at the proper distance above the floor; said distance being in accordance with regulations relating thereto and as specified by the Post Office Department. The various elements of the racks are further proportioned so that the above mentioned regulations relating thereto are met as regards the distance the same shall extend outwardly into the interior of the car and the distance that the lowest portion of the said elements shall be elevated above the floor, so as not to interfere with steam pipes in the car. The racks occupy the spaces along side walls of the mail-car, provided therefor; the same comprising several separate units or sections.

Referring to Fig. 1, a rack is shown comprising two units or sections A and B arranged side by side and mounted on the wall 10 of the mail-car. The two units or sections A and B are identical in structure and operation and each embraces two like supporting arms 12, 12, pivotally connected with the side wall 10 of the car and arranged parallel with each other and transversely of, or at right angles to said side wall. Associated with each of said supporting arms 12 is an arm or brace 14 which is pivotally connected at its lower end with the wall of the car at a point below the inner or pivoted end of the said supporting arm and which has limited sliding connection at its upper end with said supporting arm; said brace being so arranged that when the supporting arm is in its horizontal position, the brace will stand in an oblique position and will act to support or sustain the arm. The arms 12 and the braces 14 of the sections A and B are pivotally connected with vertical brackets 13 and 15, which are secured against the face of the wall 10. The bracket 13 is a double bracket, affording support for the adjacent supporting arms 12, 12 and braces 14, 14 of the two sections, while the brackets 15, 15 (Fig. 6) are adapted each to support a single arm 12 and brace 14. The two sections A and B are independent of each other except for the fact that the double bracket 13 serves to sustain the supporting arms and braces of the two sections; such double brackets being used to bring the sections A and B into close relation with each other, with attendant saving of space. Each rack section A and B comprises, in addition to the two supporting arms 12, 12, four horizontal rods or bars 16, 17, 18 and 19 extending in a direction lengthwise of the car and secured at their ends in said arms. Each of said rack

sections A and B, comprising the rigidly connected arms 12, 12 and rods or bars 16, 17, 18 and 19, when in normal position or when in use, stands in horizontal position or extends outwardly from the wall 10 of the car at right angles to the same; being sustained in this position by the braces 14, 14, as seen in Fig. 2. Each of said rack sections is, moreover, so constructed that it may be thrown or folded upwardly against the wall of the car, through the sliding engagement of the outer ends of the braces 14 with the arms 12, as clearly seen in Fig. 3. The rods 16, 17 and 18 are equally spaced longitudinally of the arms 12 so as to form two equal spaces between the three rods, the rod 16 being located at the inner ends of the said arms, the rod 17 at the center thereof, and the rod 18 adjacent to the outer end of the arms. Said rods 16, 17 and 18 are provided with a plurality of hooks 20, of which those mounted upon the inner and outer rods 16 and 18, face toward the center rod 17, and those mounted upon the said central rod 17 face alternately toward the said inner and outer rods 16 and 18; there being a hook on said center rod to correspond with each of the hooks of the inner and outer rods 16 and 18. Said hooks are adapted to support a plurality of mail-sacks (not shown) arranged in two rows, of a convenient number each, and which occupy the spaces between the rods 16, 17 and 18. The rod 19 is located adjacent to the rod 18 and slightly below and outside of the said rod 18. The purpose of the rod 19 is to provide means for partially supporting the sorting trays (not shown), which latter are provided with hooks adapted to detachably engage the said rod 19 in a familiar manner. The said rod 19 is located slightly below the level of the other rods, in order that the said sorting trays, when supported between said rod 19 and another supporting rod provided in mail-cars for the purpose, will be at the same level with the open upper ends of the mail-sacks.

The central or double bracket 13 (Fig. 4) comprises an elongated flat plate having laterally enlarged portions at both ends, through which extend screws 13^a, by means of which the bracket is secured in a vertical position to the wall 10 of the car. At the upper end of said bracket 13 are provided outwardly projecting, horizontal lugs 21 (Figs. 4 and 5) strengthened by a rib 21^a extending therebetween. Extending from the base of said lugs to the upper margin of the bracket are vertically extending, locking slots 22 (Figs. 3 and 5). Bearing blocks 23 are supported on and extend upwardly from said lugs 21. Said blocks 23 are attached to said lugs by means of shanks 23^a, integral with said bearing blocks, which extend downwardly through said lugs and are provided with nuts 23^c having screw-threaded engagement therewith and bearing against the under faces of the lugs 21. Said bearing blocks are further provided with locking projections 23^b adapted to engage the slots 22, thereby insuring a fixed relation between the lugs and the bearing blocks, when the parts are assembled. The lower extremity of the said double bracket is provided with two outwardly extending lugs 29, 29 arranged upon either side of the central axis of the bracket. The braces 14, 14 are pivotally connected with said lugs 29 by horizontal pivot bolts 29^a. The single brackets 15 (Fig. 6) are similar to the double brackets 13, and each supports a single arm 12 and brace 14 of the rack. Said single brackets 15 are for that reason proportionately narrower and provided with single lugs 31 and 32 at the upper and lower ends thereof. The lugs 31 are like the lugs 21 and have attached thereto bearing blocks corresponding with the bearing blocks 23 on the double bracket 13. The lug 32 corresponds with the lug 29 on the said double bracket, and the brace 14 associated with the said single bracket is pivoted to said lug 32, as hereinbefore described. The rod 16 extends through and is journaled within the said bearing blocks 23 and has its ends rigidly secured in the extremities of the supporting arms 12, 12. Said supporting arms 12, 12, (Fig. 2), are shown as made of cast metal, and provided with upper and lower, longitudinal stiffening flanges 25 and with bosses 24 located at the points at which the several rods 16, 17, 18 and 19 are secured thereto. The upper margins of said supporting arms are preferably curved downwardly in their portions between the central bosses thereof and the extremities of the arms, so that the upper margins of the arms are brought near the level of the openings of the sacks, thereby facilitating the delivery into the proper sacks of the mail matter when tossed from a point at a distance therefrom or from the vicinity of the adjoining rack. Extending downwardly and outwardly from the outer extremity of each supporting arm 12 is a short arm 12^a adapted to support one extremity of the rod 19. Upon the under side of each supporting arm is a downwardly projecting longitudinal rib 26, of a length equal to approximately one-half of the length of the said arm. Said rib 26 is provided with a slot 27 extending substantially the entire length of said rib and approximately parallel with the supporting arm. Said slot affords sliding connection with the arm 12 of the upper end of the associated brace 14, which is provided at such upper end with a pivot bolt 30 secured in the brace and passing through said slot.

As shown, each of the braces 14 has forked extremities, the lower one of which strad-

dles the lug 29 or 32, and is pivotally connected therewith by the pivot bolt 29ª. The upper forked extremity of said brace straddles the rib 26 and the bolt 30 extends through the extremities of the forked portions of the braces and the slot 27, thereby loosely connecting the upper extremity of the brace 14 with the supporting arm 12. Said bolt 30 is adapted to travel within the slot when the arm 12 is swung upwardly on its pivotal axis. When the rack is in its operative position (Fig. 2), the brace acts to rigidly support the arm 12, by reason of the contact of the bolt 30 with the outer end of the slot 27. A portion of the stress is removed from the bolt 30 by the provision of bosses 31 (Fig. 3) formed upon either side of the outer extremity of the rib 26. Said bosses form inwardly facing and concaved shoulders, conforming with the shape of the extremity of the brace 14, and which coact with the same when the supporting arm is in its operative position.

For the purpose of holding each rack in its lifted or vertical position, when swung up against the wall 10 of the car, as shown in Fig. 3, a plurality of hooked detents 34 is mounted on said wall 10 above the racks and in such position that when the racks are swung up against the wall, said detents will engage the central rod 17 at points adjacent to the supporting arms 12. Each of said detents has the form of a hook pivoted within a recessed bracket or casing 35, which is attached to the said wall 10. Said detent 34 is provided with a head 34ª having an inclined or beveled lower face which is acted on by the rod 17, in such manner that the rod acts to lift and pass beneath said head. The detent is also provided with a shank portion 34ᵇ, through which the pivot bolt 35ª passes and which extends within the casing 35. The inner end or arm of said shank 34ᵇ is adapted for contact with a downwardly facing stop surface 35ᵇ on said casing, so as to hold the hook in a horizontal position, and with the inclined surface of its head 34ª in position to be engaged by the rod 17. The parts are so arranged that if the rack be swung upwardly when the detent is in its normal position, and the rod 17 comes in contact with the inclined lower face of the head 34ª, the hook will be lifted to permit the passage of the rod 17 and will then fall by gravity into position to engage said rod. The said inner end of the shank 34ᵇ is, moreover, so arranged that when the hook is thrown backwardly to the position shown in dotted lines in Fig. 2, said shank will project beyond the outer edge of the casing 35 in position for contact of the rod 17 therewith, so that when the rod 17 is swung backwardly against the casing 35, the hook 34 will be thrown forwardly and downwardly into engagement with said rod. Each detent 34 is arranged to be held by gravity in its inoperative position, so that when it is desired to lower the rack, all of the detents engaged therewith may be thrown backwardly by the hand and will remain out of engagement with the rod 17, thereby leaving the operator free to use both hands in lowering the rack. When the rack is again lifted all of the detents will engage the rod 17 without any manipulation of said hooks by the operator. As shown, the side plates of the casing 35 are so arranged that their outer margins 35ᶜ form stop shoulders against which the rod 17 strikes when the rack is thrown into its upright position.

In the use of the supporting racks described, the mail sacks are hung upon the hooks 20 and fill the spaces between the rods 16, 17 and 18; the openings of the sacks being then distended in readiness to receive the letters and other articles in sorting the mail. While the mail sacks are being filled the rack is in its horizontal position, as shown in Fig. 2. In case the rack is not in use, and the floor space below the same is required for storing the filled mail sacks, the rack will be swung upwardly to its vertical position and there held by means of the detents 34. The sacks need not be removed from the racks when the same are so swung upwardly. When it is desired to return the rack to its operative position, the several detents 34 are thrown backwardly and the rack may then be lowered to its horizontal position. As the rack is swung upwardly, the upper ends of the braces 14 are carried to the lower ends of the slots 27 and said braces reach a position approximately parallel with the supporting arms 12, thus leaving no portion of the rack projecting outwardly into the interior of the car.

One important advantage gained by the use of a supporting rack adapted to be swung upwardly against the wall of the car, as described, is that when such racks are in position against the upper part of said wall, the floor space and wall space below the racks is left clear of any obstruction and may be used for the temporary storage of mail sacks and other bulky matter. Moreover, in the use of the form of rack described, the mail sacks, whether filled or empty, need not be removed from the hooks thereof before swinging the racks upwardly from its horizontal position. It is evident that this would not be possible with a form or rack that folds or swings downwardly. This feature, therefore, not only gives added storage space for the sacks, but it saves a large amount of time and labor by avoiding the necessity of removing the sacks from the racks before they are placed in folded position. The construction described in the supporting arms and braces is such as to afford a large degree of strength combined with

lightness of weight. The use of the double and single brackets permits the racks to be divided into sections or units of suitable size without appreciable waste of space in the car; it being understood that one or more of said sections or units being independent of the others, may be used separately or together, depending upon the amount of mail matter to be handled. The details of construction described in the brackets and means for pivotally connecting the racks therewith, afford a simple, cheap and convenient construction in these parts.

It is to be understood that the particular details of construction shown in the drawings and hereinbefore described may be variously modified in practice, without departure from the spirit of my invention, and I do not, therefore, desire to be limited to such specific details, except so far as the same may be pointed out in the appended claims as constituting parts of my invention.

I claim as my invention—

1. In a supporting device for mail sacks, the combination of brackets adapted to be secured to the wall of a car and provided at their upper ends with outwardly extending bearing members and at their lower ends with outwardly extending lugs, a rack member comprising supporting arms and a plurality of horizontal rods rigidly attached to, and extending between said arms, one of the rods of said rack extending through said bearing members on the upper end of said bracket, thereby forming a pivotal support for said rack, and braces pivoted at their lower ends to the said lugs on the lower ends of the brackets and having sliding connection at their upper ends with said arms.

2. In a supporting device for mail sacks, the combination of brackets adapted to be secured to the wall of a car and provided at their upper ends with outwardly extending bearing members and at their lower ends with outwardly extending lugs, a rack member comprising supporting arms and a plurality of horizontal rods rigidly attached to, and extending between said arms, one of the rods of said rack extending through said bearing members on the upper end of said bracket, thereby forming a pivotal support for said rack, braces pivoted at their lower ends to the said lugs on the lower ends of the brackets and having sliding connection at their upper ends with said arms, and vertically swinging detents mounted upon the wall of the car above the rack adapted to engage one of the horizontal rods of said rack to hold the same in its vertical position.

3. In a supporting rack for mail-sacks, the combination of brackets adapted to be secured to the wall of a car and provided with outwardly extending lugs, bearing blocks secured to the lugs on the said brackets, a rack member comprising supporting arms and a plurality of rods rigidly attached to and extending between said supporting arms, the rod adjacent to the inner ends of said arms extending through said bearing blocks and forming therewith pivotal supports for the rack, and means for supporting said rack in a horizontal position.

4. In a supporting rack for mail sacks, the combination of brackets adapted to be secured to the wall of a car and provided with lugs extending outwardly from the upper and lower ends thereof, bearing blocks detachably secured to the uppermost lugs on said brackets, a rack member comprising supporting arms, and a plurality of rods rigidly attached to and extending between said arms, one of said rods passing through the bearing blocks and forming therewith the pivotal support for the rack, and braces pivoted to the lower lugs on the brackets and having limited sliding engagement at their upper ends with said arms.

5. In a supporting rack for mail sacks, the combination of brackets adapted to be secured to the wall of the car and provided with outwardly extending lugs at their upper and lower ends, bearing blocks detachably secured to the uppermost of said lugs, a rack member comprising supporting arms and horizontal rods attached to and extending between said arms, one of said rods passing through said bearing blocks, thereby forming a pivotal support for said rack, and braces pivoted to the lugs on the lower ends of said brackets and having sliding engagement at their upper ends with said supporting arms; said supporting arms being provided with stops for limiting the outward sliding movement of the upper ends of said braces relatively to the arms, adapted to be engaged by said braces when the arms are in horizontal position, and said arms being adapted to extend in a direction parallel with said supporting arms when the same are folded upwardly against the car wall.

6. In a supporting rack for mail sacks, the combination of brackets adapted to be secured to the wall of the car, and provided with outwardly extending lugs at their upper and lower ends, a rack member pivotally connected with the lugs at the upper ends of said brackets, and comprising supporting arms provided with longitudinal slots, and horizontal rods attached to and extending between said arms, braces pivoted to the lugs on the lower ends of said brackets, and having forked upper ends and bolts inserted through the forked ends of said braces and having sliding engagement with the slots in said supporting arms; said supporting arms being provided with stop shoulders adapted for contact with the upper ends of said braces, to limit the outward sliding movement thereof relatively to the arms when the latter are in a horizontal position.

7. In a supporting rack for mail sacks, the combination of brackets adapted to be secured to the wall of a car, and provided with outwardly extending lugs at the upper and lower ends thereof, a rack member comprising supporting arms and horizontal rods rigidly connected with and extending between said arms, said rack member having pivotal connection with the lugs at the upper ends of said brackets; each of said arms consisting of a single piece of metal provided with laterally extending stiffening flanges along its upper and lower margins, and a longitudinal vertical depending rib provided with a longitudinal slot and braces pivoted at their lower ends to the lugs at the lower ends of the brackets, and having sliding connection at their upper ends with the said longitudinal slots of the said arms.

8. In a supporting rack for mail sacks, the combination of a rack member pivotally mounted upon the wall of the car, and comprising supporting arms and horizontal rods rigidly attached to and extending between said arms, and means for supporting said rack member in a horizontal position, said arms being provided with stiffening flanges at their upper and lower edges, and with hubs or bosses provided with apertures in which said rods are inserted and secured.

9. In a supporting rack for mail sacks, the combination with a pivoted rack member, of a bracket comprising a plate adapted for attachment to a car wall; said plate being provided with an integral lug having a vertically extending aperture therein and with a vertically extending slot above the said lug, and a bearing block provided with a stem adapted for insertion through the vertical aperture of said lug and with a locking projection adapted for engagement with said locking slot.

10. In a supporting rack for mail sacks, the combination of two rack members, each comprising two supporting arms and horizontal rods attached to, and extending between, said arms, a bracket affording pivotal support for the adjacent supporting arms of the two sections, said bracket being provided with laterally separated, outwardly extending integral lugs, and bearing blocks attached to the said lugs and provided with bearing apertures; the said arms being located adjacent to each other with their pivoted ends between said bearing blocks, and the rods adjacent to the pivoted ends of said arms passing through and having bearing in said blocks.

In testimony, that I, claim the foregoing as my invention I affix my signature in the presence of two witnesses, this 2nd day of August A. D. 1912.

FRED. RAUSCH.

Witnesses:
CHARLES H. POOLE,
EUGENE C. WANN.

Copies of this patent may be obtained for five cents each, by addressing the "Commissioner of Patents, Washington, D. C."