April 7, 1964 K. F. FRYER 3,128,112

PRIVACY LOCK SET

Filed July 17, 1961 2 Sheets-Sheet 1

FIG. 1.

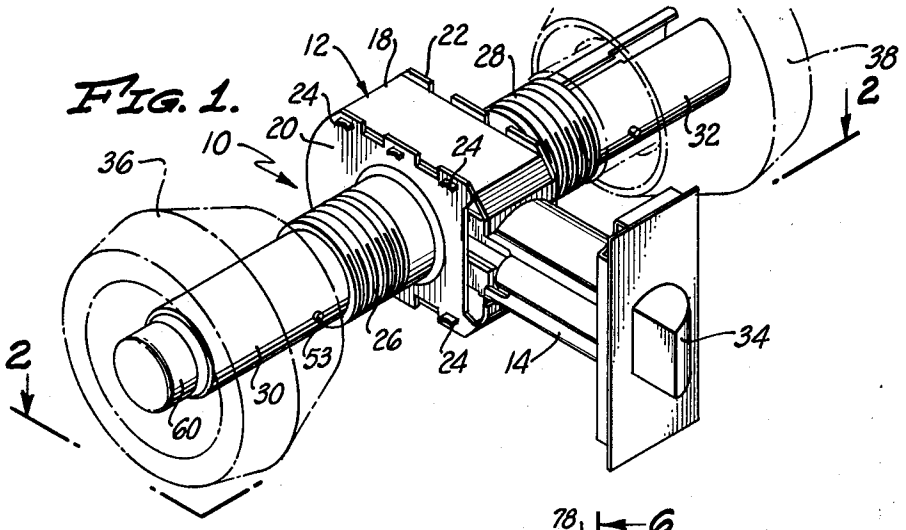

FIG. 2.

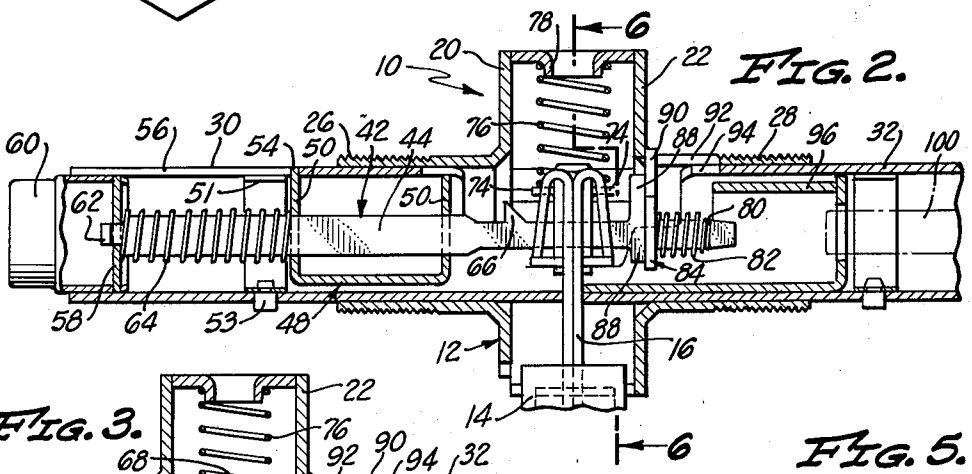

FIG. 3.

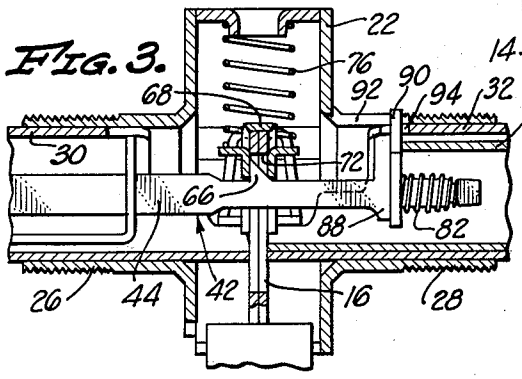

FIG. 4.

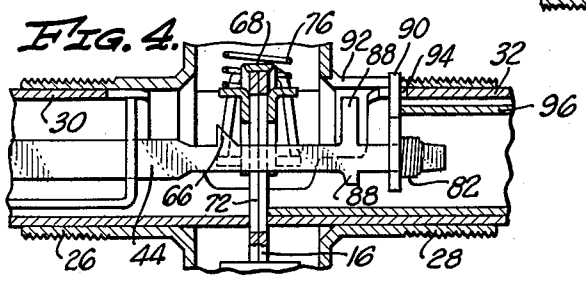

FIG. 5.

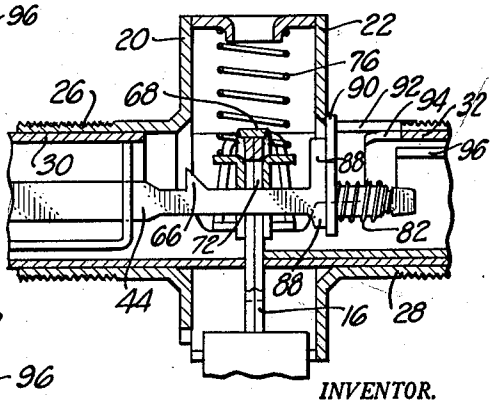

INVENTOR.
KENNETH F. FRYER
BY
Thomas P. Mahoney
ATTORNEY

April 7, 1964 K. F. FRYER 3,128,112

PRIVACY LOCK SET

Filed July 17, 1961 2 Sheets-Sheet 2

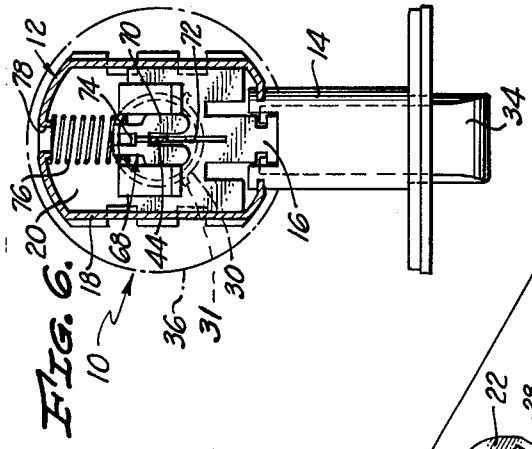

FIG. 6.

FIG. 7.

INVENTOR.
KENNETH F. FRYER
BY
Thomas F. Mahoney
ATTORNEY

United States Patent Office

3,128,112
Patented Apr. 7, 1964

3,128,112

PRIVACY LOCK SET

Kenneth F. Fryer, Anaheim, Calif., assignor to The American Hardware Corporation, New Britain, Conn., a corporation of Connecticut

Filed July 17, 1961, Ser. No. 124,463
4 Claims. (Cl. 292—169)

The present invention relates to a privacy lock set and, more particularly, to a privacy lock set incorporating apparatus actuable to prevent normal retraction of the latch bolt from the exterior side of the lock set.

Various prior art lock sets incorporate means which are actuable from the interior of the lock set to prevent operation from the exterior of the lock set. Such lock sets are commonly known as privacy lock sets and comprise a case, a latch bolt, a retractor slide connected to the latch bolt and reciprocable within the case, and an interior and an exterior rollback which are rotatable for actuating the slide to retract the latch bolt. An elongated locking bar is normally arranged to extend through the case, and is movable by a push button, or the like, into a locking position between the exterior rollback and the case. Thus, a person wishing to lock a door from the inside pushes an interiorly located push button, for example, which moves the locking bar to its locking position, preventing relative rotation between the exterior rollback and the case. Since the exterior rollback cannot be rotated by operation of the exterior door knob, the lock set cannot be operated from the exterior to retract the latch bolt.

It is noted, however, that the locking bar does not interfere with the normal rotation of the interior rollback, so that the lock set is operable from the interior to retract the latch bolt.

Once the locking bar has been moved to its locking position by operation of the push button, for example, a locking bar catch engages and holds the locking bar in its locked position until the retractor slide is operated to retract the latch bolt. Thus, with the push button depressed, placing the locking bar in its locked position, rotation of the interior rollback by the interior door knob will retract the retractor slide and the latch bolt. This will move the locking catch out of restraining engagement with the locking bar, and a spring in the case will bias the locking bar to its release position.

Such lock sets of the prior art have been found to be undesirably susceptible to inadvertent locking. Such inadvertent locking occurs, for example, when a person depresses the push button, placing the locking bar in its locked position, in which position the locking bar catch engages the locking bar to restrain it against movement to a release position. Thereafter, a slight rotation of the exterior door knob causes the locking bar to be wedged between the exterior rollback and the case, constraining the locking bar against movement to its release position. At this point, closure of the door will move the locking bar catch out of interfering engagement with the locking bar, but the locking bar will not move to its release position since it is wedged between the case and the exterior rollback.

Upon closure of the door, the retractor slide moves outwardly, and the locking bar catch again engages and restrains the locking bar against movement to its release position. It will be apparent that release of the exterior door knob at this time will not be effective to permit movement of the locking bar to its release position, and the lock set cannot then be operated without resort to emergency means, such as a special tool insertable in the lock set through an opening provided for that purpose.

Accordingly, the present invention includes a locking bar arrangement which permits the locking bar to move to its release position whenever the latch bolt is retracted, and regardless of any torque which may be applied to the exterior rollback. This operation is accomplished by the provision of a locking dog which is slidably mounted upon the locking bar. The locking dog is positively engaged by the locking bar for movement of the locking dog to a locking position between the case and the exterior rollback. The locking bar is movable to its release position independently of the locking dog, should the locking dog be wedged between the exterior rollback and the case, and a bias means or spring is mounted between the locking bar and locking dog to move the locking dog to its release position at such time as the torque on the exterior rollback is absent.

Therefore, it is an object of the present invention to provide a privacy lock set which is not susceptible to inadvertent exterior locking of the lock set.

It is another object of the invention to provide a privacy lock set incorporating a locking bar which is always movable to its release position upon retraction of the latch bolt.

A further object of the invention is the provision of a locking bar which slidably mounts a locking dog, and which is movable to a locking position to dispose the locking dog between the case and the rollback to prevent rotation of the rollback relative to the case, and which is movable to a release position independently of the locking dog. The locking dog is normally movable to a release position with the locking bar, but in the event that the locking dog is inadvertently wedged between the case and the exterior rollback, a bias means or spring continuously urges the locking dog toward its release position for movement thereto upon the release of the locking dog from between the exterior rollback and the case.

It is another object of the invention to provide a privacy lock set operative by a push button to prevent rotation of the exterior rollback, the locking bar being engaged by a locking bar catch to lock the lock set until the interior rollback is rotated or the latch bolt is depressed, and in which an emergency rollback is included for operating the lock set from the exterior.

A further object of the invention is to provide a reliable and easily operable locking bar mechanism for use in a privacy lock set, and which is adapted to be mass-produced relatively inexpensively.

A further object of the invention is the provision of a privacy lock set incorporating a locking bar arrangement to prevent rotation of the exterior rollback once actuation of an internal push button has been accomplished, and which is characterized by a construction and arrangement of components having a relatively long service life, and wherein the relative movement of such components is so slight that frictional wearing of such components is negligible.

Other objects and features of the present invention will be readily apparent to those skilled in the art from the following specification and accompanying drawings wherein is illustrated one form of the invention, and in which:

FIG. 1 is an isometric view of the privacy lock set of the present invention;

FIG. 2 is a transverse, cross-sectional view taken from the line 2—2 of FIG. 1;

FIG. 3 is a cross-sectional view of the lock set case and the components therein illustrating the locking bar and locking dog in their locking positions;

FIG. 4 is a cross-sectional view of the lock set case and the components therein illustrating the locking bar in release position and the locking dog in locking position;

FIG. 5 is a cross-sectional view of the lock set case and the components therein illustrating the locking bar and locking dog in their release positions;

FIG. 6 is a longitudinal cross section taken from the line 6—6 of FIG. 2; and

FIG. 7 is an exploded isometric view of the lock set case, and including the rollbacks and retractor slide.

Referring to the drawings, and more particularly to FIGS. 1, 2, 6, and 7, there is illustrated a privacy lock set 10 which, as is well-known to those skilled in the art, is disposable in operative relationship with a door (not shown), the lock set 10 including a housing or case 12 located in a transverse opening in the door, and a latch bolt housing or case 14 located in a longitudinal bore in the edge of the door.

The case 12, which operatively supports a retractor slide 16, includes a center section 18 which is substantially C-shaped in side elevation, and a pair of side flanges or plates 20 and 22 which are the interior and exterior open sides of the center section 18. The side plates 20 and 22 include a plurality of openings for receiving a corresponding plurality of mounting lugs 24 integral with the center section 18, the projecting ends of the lugs 24 being staked to secure the side plates 20 and 22 in position. The terms "exterior" and "interior" are herein employed to refer to the exterior and interior sides of the door with which the lock set 10 is associated, and are merely used for convenience and are not to be construed as limiting.

A pair of cylindrical, transversely extending bosses 26 and 28 are integral, respectively, with the side plates 20 and 22, and rotatably receive, respectively, an elongated, tubular interior rollback 30, and an elongated, tubular exterior rollback 32. As is well-known to those skilled in the art, the interior extremities of the rollbacks 30 and 32 are formed to provide cam faces 31 and 33, respectively, FIGS. 6 and 7, engageable with the retractor slide 16 to retract a latch bolt 34 reciprocably and longitudinally slidable in the latch bolt case 14. To facilitate such rotation, an interior door knob 36 and an exterior door knob 38 are suitably mounted to the interior and exterior rollbacks 30 and 32, respectively.

With this arrangement, rotation of either of the rollbacks 30 and 32 by operation of their associated door knobs will cause the retractor slide 16 to be retracted against the bias of a retractor compression spring 76, as will be described in greater detail hereinafter. In order to permit the lock set 10 to be locked from the interior, a locking bar mechanism 42 is provided to prevent relative rotation between the exterior rollback 32 and the boss 28 of the case 12.

The locking bar mechanism 42 includes an elongated, transversely extending locking bar 44 which is substantially flat in cross section, that is, its width is much greater than its thickness. The locking bar 44 is slidably supported in position within the hollow interior of the interior rollback 30 by a locking bar guide 48, which includes a pair of substantially circular end sections 50 having axially aligned openings 52 through which the locking bar 44 is slidably disposed. The left end section 50, as received in FIG. 2, includes a protuberance 54 which is slidably receivable within an axial slot 56 provided in the interior rollback 30, and an annular internal knob catch 51 is slidably received within the hollow interior of the interior rollback 30, and is held in position immediately to the left of the left end section 50 by engagement of a detent 53 of the knob catch 51 within a suitable opening in the wall of the interior rollback 30. Thus, the locking bar guide 48 is limited in its movement in one direction by the extremity of the slot 56 and is limited in its movement in the opposite direction by engagement with the knob catch 51.

The inner extremity of the locking bar 44 is received within a central aperture of a push button disk 58 secured to a push button 60, the inner extremity of the locking bar 44 being bent into a tab 62 so that the locking bar 44 is moved in common with the push button 60. A compression spring 64 is mounted upon the locking bar 44 and is engaged at one end with the push button disk 58 and at the other end with the left end section 50 of the locking bar guide 48. Thus, inward movement or depression of the push button 60 moves the locking bar 44 inwardly against the bias of the spring 64, and release of the push button 60 permits the locking bar 44 to move outwardly, unless it is otherwise constrained against such movement.

The locking bar 44 is constrained against outward movement by engagement of a triangular-shaped detent tab 66, which projects upwardly from the elongated shank of the locking bar 44, with a locking bar retainer or catch 68.

The locking bar catch 68, as best shown in FIG. 7, is substantially channel-shaped in configuration, the spaced legs 70 of the catch 68 being slidable over opposite faces of the retractor slide 16, engagement of the inner extremity of the retractor slide 16 with the base of the channel-shaped catch 68 serving to limit outward movement or extension of the catch 68. The legs 70 of the catch 68 are longitudinally slotted, the slots thereof being transversely aligned with a locking bar slot 72. The provision of slots in the legs 70, and the provision of the slot 72 in the retractor slide 16 permits the locking bar 44 to be axially slidable through the retractor slide 16 and the locking bar catch 68 regardless of whether the catch 68 and slide 16 are in their retracted or extended positions.

The locking bar catch 68 includes a pair of integral, oppositely disposed, and transversely extending spring tabs 74 which are engaged by one extremity of a retractor compression spring 76. The opposite extremity of the retractor spring 76 engages a spring seat 78, FIG. 2, which is integral with the case 12, the bias of the spring 76 thus acting against the locking bar catch 68 to urge it against the retractor slide 16 to normally maintain the catch 68 and the slide 16 in their extended positions. It is noted that the slidable mounting of the catch 68 upon the slide 16 permits the catch 68 to be slidably moved inwardly, independently of inward movement of the slide 16.

Thus, upon inward movement of the locking bar 44 by depression of the push button 60, the detent tab 66 will engage the left leg 70 of the catch 68, as viewed in FIG. 2, and the inner terminus of the slot in such leg 70 will ride up upon the inclined face of the detent tab 66. When the perpendicularly disposed face or edge of the detent tab 66 is located in the space between the legs 70, it is noted that the bias of the retractor spring 76 will urge the catch 68 outwardly, holding the detent tab 66 in locked position between the spaced legs 70 of the catch 68. This constitutes the "locked" position of the locking bar 44.

The exterior extremity of the locking bar 44 is undercut to provide a pair of shoulders constituting spring receiving seats 80, and a compression spring 82 is mounted upon the exterior extremity of the locking bar 44, one end of the spring 82 being engaged with and seated upon the spring seats 80. The opposite end of the spring 82 abuts against a substantially rectangular locking bar dog 84 which includes a central slot 86 for affording slidable movement of the locking bar dog 84 upon the exterior extremity of the locking bar 44. The dog 84 is limited in its movement interiorly by a pair of lugs 88 integral with and extending from the shank of the locking bar 44 intermediate the detent tab 66 and the spring seats 80.

The locking bar dog 84 includes a vertically extending detent 90 which is slidably receivable within a pair of axially extending detent slots 92 and 94 provided, respectively, in the exterior boss 28 of the case 12 and in the inner extremity of the exterior rollback 32. The detent slots 92 and 94 are normally in alignment with each other, and move out of such alignment when the exterior rollback 32 is rotated one way or the other to engage with the retractor slide 16 for retraction of the latch bolt 34.

In the unlocked or release position of the dog 84, illustrated in FIG. 2, the detent 90 thereof does not interfere with relative rotation between the exterior rollback 32 and the boss 28 of the case 12, but when the locking bar 44 is urged inwardly to its locking position, the detent 90 of the dog 84 will be disposed within the detent slots 92 and 94, preventing rotation of the exterior rollback 32 and consequently locking the lock set 10.

In operation, the lock set 10 may be locked from the inside of a room, for example, by depressing the push button 60. This moves the locking bar 44 inwardly, and the detent tab 66 engages the catch 68, retracting it slightly until the detent tab 66 is located between the legs 70 of the catch 68. With the detent tab 66 in this position, the bias of the spring 76 causes the catch 68 to move outwardly and lock the bar 44 in its locked position.

In this locked position of the bar 44, the detent 90 of the dog 84 is located in the detent slots 92 and 94, preventing rotation of the exterior rollback 32. It is noted, however, that the interior rollback 30 may be rotated to open the door, and it is also noted that if the push button 60 was depressed with the door open, subsequent closure of the door from the outside would not cause a lockout since the depression of the latch bolt 34 by the usual strike plate (not shown) would cause retraction of the catch 68, releasing the bar 44 for movement to its release position under the bias of the spring 64.

The locking positions of the bar 44, the catch 68, and the dog 84 are best illustrated in FIG. 3 of the drawings. Assuming that for some reason the dog 84 is wedged in the detent slots 92 and 94, as by imposition of a torque upon the exterior rollback 32, and further assuming that the locking bar 44 is in its locked position, closure of the door will cause inward movement of the latch bolt 34, and consequent inward movement of the slide 16. The inward or retracting movement of the slide 16 moves the catch 68 into the position illustrated in FIG. 4, and the locking bar 44 moves to its release position, independently of the dog 84, which, it is assumed, remains wedged in the detent slots 92 and 94.

Subsequently, when the torque upon the exterior rollback 32 is relieved, the dog 84 will be released, and the spring 82 urges the dog 84 toward its release position in engagement with the lugs 88 of the locking bar 44, as illustrated in FIG. 5 of the drawings.

Thus, it will be apparent that the capability of the locking bar 44 to move independently of the locking dog 84 prevents inadvertent lockouts. The locking bar 44 always moves to its release position upon release of the detent tab 66 thereof by the catch 68, regardless of whether or not the dog 84 is wedged between the exterior rollback 32 and the boss 28 of the case 12. Further, the slidable mounting of the dog 84 upon the locking bar 44, together with the provision of the spring 82, insures the subsequent movement of the dog 84 to its release position upon the release of any wedging forces. For this purpose the bias force which the spring 82 is capable of exerting is less than that of the spring 64 so that the spring 64 is capable of overcoming the bias of the spring 82 to move the locking bar 44 to its release position, as illustrated in FIG. 4 of the drawings.

The lock set 10 also includes apparatus to permit the lock set 10 to be operated from the exterior with the associated door closed and the locking bar 44 in its locking position. This feature is useful when a small child, for example, locks himself in a room. Such unlocking apparatus includes an elongated, tubular emergency rollback 96 rotatably carried within the hollow interior of the exterior rollback 32. The emergency rollback 96, as best illustrated in FIG. 7, is engageable at one extremity with the retractor slide 16 for retracting the latch bolt 34, and at its other extremity includes a slot 98 for receiving a suitable tool 100, FIG. 2. The tool 100, as will be obvious to those skilled in the art, is insertable through a suitable opening provided in the exterior door knob 38.

Rotation of the tool 100 effects rotation of the emergency rollback 96 independently of the exterior rollback 32 so that the emergency rollback 96 is effective to retract the latch bolt 34 regardless of whether or not the exterior rollback 32 is constrained against rotation by the locking dog 84.

Thus, there has been provided a lock set 10 which is adapted to provide the usual features of a privacy lock set, and yet which is not susceptible to inadvertent lockouts. The components employed for achieving this end are reliable in operation, characterized by a long service life by reason of the slight movement thereof required for operation, are easy to operate, and are relatively inexpensive to manufacture.

I claim:

1. In a lock set having a case, a latch bolt, a retractor slide in said case, and a rollback rotatable relative to said case for actuating said slide to retract said latch bolt, the combination of: a locking dog having a mounting opening therein; an elongated locking bar slidably mounting said locking dog, said bar having an end extending through said opening and beyond said dog, said locking bar being movable to a locking position to dispose said locking dog between said case and said rollback to prevent rotation of said rollback relative to said case, said locking bar being movable to a release position independently of said locking dog; and bias means engaged between said locking dog and said locking bar end and tending to bias said locking dog from between said case and said rollback upon movement of said locking bar to said release position.

2. In a lock set having a case including a slotted boss, a latch bolt, a retractor slide in said case, and a slotted rollback rotatable relative to said boss for actuating said slide to retract said latch bolt, the combination of: a locking dog slidable in the slot in said case; an elongated locking bar slidably mounting said locking dog, said locking bar being positively engageable with said locking dog and movable to a locking position to dispose said locking dog in the slot of said boss to prevent relative rotation therebetween, said locking bar being movable to a release position and having a seat thereupon; and bias means engaged between said locking dog and said locking bar seat to permit movement of said locking bar to said release position independently of said locking dog, and tending to bias said locking dog out of the slot in said boss upon movement of said locking bar to said release position.

3. In a lock set having a case, a latch bolt, a retractor slide in said case, and a rollback rotatable relative to said case for actuating said slide to retract said latch bolt, the combination of: a locking dog catch engageable with said retractor slide; a retractor slide spring disposed between said case and said catch to bias said catch and said slide outwardly to project said latch bolt; a locking dog; an elongated locking bar slidably mounting said locking dog and including a detent tab, a lug and a dog spring seat, said locking bar being movable to a locking position for engagement of said catch with said detent tab to lock said locking bar in said locking position, said lug engaging said locking dog during movement of said locking bar to said locking position to position said locking dog between siad case and said rollback to prevent rotation of said rollback relative to said case, said catch being disengageable from said detent tab upon retraction of said slide; a locking bar spring operative to bias said locking bar to a release position to move said detent tab away from said catch upon disengagement between said catch and said detent tab; and a dog spring engaged between said locking dog and said locking bar dog spring seat and normally biasing said locking dog against said lug, the bias force of said dog spring being less that the bias force of said locking bar spring to permit said locking bar spring to overcome said dog spring to move said locking bar to a release position independently of said locking dog when

said locking dog is jammed in position between said case and said rollback.

4. In a lock set having a case, a latch bolt, a retractor slide in said case, and a rollback rotatable relative to said case for actuating said slide to retract said latch bolt, the combination of: a locking dog catch engageable with said retractor slide; a retractor slide spring disposed between said case and said catch to bias said catch and said slide outwardly to project said latch bolt; a locking dog; an elongated locking bar slidably mounting said locking dog and including a detent tab and a lug; a push button connected to said locking bar and depressible to move said locking bar to a locking position for engagement of said catch with said detent tab to lock said locking bar in said locking position, said lug engaging said locking dog during movement of said locking bar to said locking position to position said locking dog between said case and said rollback to prevent rotation of said rollback relative to said case, said catch being disengageable from said detent

tab upon retraction of said slide; a locking bar spring operative against said push button to bias said locking bar to a release position to move said detent tab away from said catch upon disengagement between said catch and said detent tab; and a dog spring engaged between said locking dog and said locking bar and normally biasing said locking dog against said lug, the bias force of said dog spring being less than the bias force of said locking bar spring to permit said locking bar spring to overcome said dog spring to move said locking bar to a release position independently of said locking dog when said locking dog is jammed in position between said case and said rollback.

References Cited in the file of this patent

UNITED STATES PATENTS

2,038,907	Schlage	Apr. 28, 1936
2,299,180	Schlage	Oct. 20, 1942
3,022,102	Russell et al.	Feb. 20, 1962