(19) Europäisches Patentamt
European Patent Office
Office européen des brevets

(11) **EP 4 121 184 B1**

(12) **EUROPEAN PATENT SPECIFICATION**

(45) Date of publication and mention of the grant of the patent:
23.08.2023 Bulletin 2023/34

(21) Application number: **21719249.1**

(22) Date of filing: **18.03.2021**

(51) International Patent Classification (IPC):
A63G 7/00 *(2006.01)*

(52) Cooperative Patent Classification (CPC):
A63G 7/00

(86) International application number:
PCT/IB2021/052266

(87) International publication number:
WO 2021/186379 (23.09.2021 Gazette 2021/38)

(54) **ROLLER-COASTER AMUSEMENT APPARATUS**

ACHTERBAHN UNTERHALTUNGSVORRICHTUNG

APPAREIL DE DIVERTISSEMENT À MONTAGNES RUSSES

(84) Designated Contracting States:
AL AT BE BG CH CY CZ DE DK EE ES FI FR GB GR HR HU IE IS IT LI LT LU LV MC MK MT NL NO PL PT RO RS SE SI SK SM TR

(30) Priority: **18.03.2020 IT 202000005761**

(43) Date of publication of application:
25.01.2023 Bulletin 2023/04

(73) Proprietor: **S.B.F. S.r.l.**
35040 Casale di Scodosia (PD) (IT)

(72) Inventors:
- **TOMMASO, Frison**
  35044 Montagnagna (PD) (IT)
- **GIUSEPPE, Franchetti**
  37035 San Giovanni Ilarione (VR) (IT)

(74) Representative: **Maroscia, Antonio**
Maroscia & Associati Srl
Viale Roma, 3
36100 Vicenza (IT)

(56) References cited:
JP-A- H05 115 618
US-A- 4 170 943
US-A- 5 272 984
US-A1- 2007 010 336

Note: Within nine months of the publication of the mention of the grant of the European patent in the European Patent Bulletin, any person may give notice to the European Patent Office of opposition to that patent, in accordance with the Implementing Regulations. Notice of opposition shall not be deemed to have been filed until the opposition fee has been paid. (Art. 99(1) European Patent Convention).

EP 4 121 184 B1

Description

Technical field

[0001] The present invention generally finds application in the field of amusement rides as used in amusement parks or the like and particularly relates to a roller-coaster amusement apparatus.

Background art

[0002] Among amusement rides for amusement parks, roller-coaster amusement apparatus, comprising at least one passenger vehicle mounted to a carriage designed to slidingly move along a track, have been long known.

[0003] Generally, the vehicle comprises a plurality of passenger-containing devices, each comprising a seat and safety means for holding the passenger in a seated position as the vehicle slides along the track.

[0004] In amusement apparatus of this type, the track extends along a closed path composed of a plurality of portions arranged as hills, descents, parabolic curves, twists and inversions, in which passengers keep the same orientation relative to the direction of travel of the vehicle.

[0005] Furthermore, the vehicle is usually hinged to the carriage about a transverse axis which is substantially perpendicular to the axis of the path to allow the passengers to move at least partially upside down.

[0006] A first drawback of such amusement apparatus is that the passenger is forced to move along the path always in the same direction.

[0007] This drawback at least partially reduces the thrill and amusing effect for the passenger during the ride on the vehicle.

[0008] A particular type of roller-coaster as described above comprises a closed Moebius loop circuit.

[0009] As used hereinafter, "Moebius loop" refers to a closed path obtained by joining the ends of the path after rotating them by half a turn relative to each other, so that the vehicle will only be in the same start position after running the path twice.

[0010] US4170943 discloses an amusement apparatus comprising a pair of side-by-side vehicles adapted to support at least one passenger in which the vehicles are movable along a closed path having a station for departure and arrival of the vehicle, in which passengers board and exit the ride.

[0011] The path comprises a substantially straight portion that forms a Moebius loop for vehicles to rotate by half a turn and roll over to invert the orientation of passengers from the starting one.

[0012] Furthermore, during rotation and rollover, vehicles rotate about their axis clockwise and anticlockwise respectively so that passengers will be returned back to the initial orientation as the follow the circuit.

[0013] A first drawback of this known solution is the that the vehicle is rolled over to revert back to the initial orientation.

[0014] A further drawback is that such rollover is provided by a complex differential gear mechanism having bevel gears to also impart a rotation to the vehicle.

[0015] This drawback increases the complexity of the apparatus as a whole, as well as its maintenance costs, thereby limiting the safety and speed of the apparatus

[0016] Another drawback is that the path has a very short length, which reduces the amusing effect and thrill caused by the amusement apparatus.

Technical Problem

[0017] In view of the prior art, the technical problem addressed by the present invention is to provide a roller-coaster amusement apparatus that can invert the orientation of passengers relative to the direction of travel along the circuit.

Disclosure of the invention

[0018] The object of the present invention is to obviate the above drawback, by providing a roller-coaster amusement apparatus that is highly efficient and relatively cost-effective.

[0019] A particular object of the present invention is to provide an amusement apparatus as described hereinbefore that can invert the orientation of passengers relative to the direction of travel along the circuit.

[0020] A further object of the present invention is to provide an amusement apparatus as described hereinbefore that can improve construction simplicity of the amusement apparatus and reduce maintenance costs.

[0021] Another object of the present invention is to provide an amusement apparatus as described hereinbefore that can provide a thrilling and interesting experience to users.

[0022] A further object of the present invention is to provide an amusement apparatus as described hereinbefore that can be used at high sliding speeds.

[0023] Yet another object of the present invention is to provide an amusement apparatus as described hereinbefore, that can be used by a plurality of users at the same time.

[0024] These and other objects, as more clearly shown hereinafter, are fulfilled by a roller-coaster amusement apparatus as defined in claim 1, comprising at least one vehicle which is mounted to a carriage designed to slidingly move along a track and has seats for passengers, wherein the carriage comprises sliding means for sliding along the track while keeping the passengers in a given orientation relative to the direction of travel of the vehicle.

[0025] The track comprises at least two pairs of rails substantially spaced apart from each other and symmetric about a center axis which extends along a Moebius loop path and the vehicle is hinged to the carriage about a transverse axis substantially perpendicular to the center axis.

[0026] In a peculiar aspect of the invention, the carriage is attached to the pairs of rails to alternately move from a first sliding state in which it slides along one of the pairs of rails during a first lap, to a second sliding state in which it slides along the other pair of rails during the next lap and the at least one vehicle is only free to rotate about the transverse axis under the force of gravity once it has moved from the first sliding state to the second sliding state so that the orientation of the passengers is inverted at each lap.

[0027] Advantageous embodiments of the invention are obtained in accordance with the dependent claims.

Brief description of the drawings

[0028] Further features and advantages of the invention will be more apparent from the detailed description of a preferred, non-limiting embodiment of a roller-coaster amusement apparatus the invention, which is described as a non-limiting example with the help of the following drawings, in which:

FIGS. 1A and 1B are a perspective view and a side view of a roller-coaster amusement apparatus of the invention in a first operating position of the vehicle;
FIGS. 2A to 8B are perspective and side views respectively of the amusement apparatus in different operating positions of the vehicle of the apparatus of Fig. 1;
FIG. 9 is a perspective view of a portion of the path of the amusement apparatus of Figs. 1A and 5A;
FIGS. 10A and 10B are enlarged side views of the vehicle in the operating positions of Figs. 1B and 5B respectively;
FIGS. 11A and 11B are enlarged front views of the vehicle of Figs. 10A and 10B.

Detailed description of a preferred exemplary embodiment

[0029] Particularly referring to the figures, there is shown a roller-coaster amusement apparatus, generally designated by numeral 1, which is suitable to be placed inside amusement parks.

[0030] In the embodiment of the figures, the apparatus 1 comprises at least one vehicle 2 mounted to a carriage 3 which can slidingly move along a Moebius loop track 4 having a central axis X, supported by sturdy uprights or support arms 14 anchored to the ground or to a self-supporting base, as described in greater detail below.

[0031] In a well-known manner, the carriage 3 may be driven by suitable motor means, not shown, which are adapted to cause the vehicle 2 to travel along the track 4 at a controlled, constant or variable speed.

[0032] In a well-known manner, the amusement apparatus 1 may comprise a control unit, not shown, connected to the motor means for controlling the sliding speed of the vehicle 2 and managed by an operator locally or from a remote location by means of suitable controls located at a given distance from the track 4.

[0033] The vehicle 2 comprises a plurality of suitable devices for supporting and containing the passengers P, each comprising a seat 5 and safety means 6 for holding the passenger P in a seated position as the vehicle 2 travels along the track 4 regardless of its sliding speed.

[0034] As shown in the figures, the carriage 3 allows the vehicle 2 to move along the track 4 in a predetermined direction of travel as shown by the arrow W.

[0035] Conveniently, the carriage 3 may comprise sliding means 7 for sliding along the track 4 while keeping the passengers P in a given orientation as the vehicle 2 travels in the direction W.

[0036] In the embodiment of the figures, the vehicle 2 comprises at least one pair of mutually opposed seats 5A, 5B oriented in the direction of travel W of the vehicle 2.

[0037] Here, a passenger P_A sitting on the seat 5A will move along the track 4 in the same direction as the direction of travel W and a passenger P_B sitting on the seat 5B will move along the track 4 in a direction opposite to the direction of travel W, or vice versa.

[0038] According to a particular aspect of the invention, the track 4 comprises at least two pairs of rails 8A, 8B; 9A, 9B substantially spaced apart from each other and symmetric about a center axis X which extends along a Moebius loop circuit.

[0039] In other words, the closed pathcomprises four rails 8A, 8B, 9A, 9B parallel to each other and located at the same distance from the center axis X and the ends of a pair of rails 8A, 8B are joined to the ends of the other pair of rails 9B, 9A to create a Moebius loop.

[0040] By this arrangement, assuming that a vehicle 2 slides on the rails of the first pair 8A, 8B along the center axis X, with the vehicle 2 below the track 4, after a full lap, the vehicle 2 will slide on the rails of the second pair 9A, 9B with the vehicle 2 above the track 4.

[0041] In addition, the vehicle 2 is hinged to the carriage 3 about a transverse axis Y substantially perpendicular to the center axis X.

[0042] In one embodiment, the vehicle 2 is operably connected to the carriage 3 via at least one support arm 10 having a first end 10A rigidly joined to the carriage 3 and a second end 10B with a pivot 11 for hinging the vehicle 2 about the transverse axis Y in both directions of rotation, i.e. clockwise or counterclockwise as viewed from one end of the pivot 11.

[0043] In a preferred embodiment of the invention, as shown in FIG. 9, the carriage 3 may comprise a substantially prismatic base 12 parallel to the center axis X, with respective ends 12A, 12B.

[0044] The vehicle 2 may comprise a pair of arms 10 arranged to form a "V" shape and having first ends 10A spaced apart from each other and rigidly joined to the ends 12A, 12B of the carriage 3 respectively, and second ends 10B joined together and attached to the pivot 11.

[0045] In one embodiment, the sliding means 7 may comprise a plurality of wheels 13 sliding along one of the

pairs of rails 8A, 8B; 9A, 9B.

[0046] The plurality of wheels 13 comprise at least a first 13A and a second pair of wheels 13B, which are opposed to each other and have respective rotation axes R_1, R_2 substantially parallel to and spaced apart from each other.

[0047] In one embodiment, the rotation axes R_1, R_2 of the first 13A and second 13B pair of wheels are parallel to the transverse axis Y.

[0048] Furthermore, the sliding means 7 may comprise at least one third pair of wheels 13C having respective axes of rotation R_3 substantially perpendicular to the center axis X and to the transverse axis Y.

[0049] The pairs of wheels 13A, 13B, 13C sliding along one of the pairs of rails 8A, 8B; 9A, 9B and mounted to the carriage 3 may be more than three in number, as shown in FIGS. 9 to 11B.

[0050] In one embodiment, each end 12A, 12B of the carriage 3 may be equipped with the three pairs of wheels 13A, 13B, 13C acting on each rail of the pair of rails 8A, 8B; 9A, 9B.

[0051] This particular configuration allows the carriage 3, and therefore the vehicle 2, to limit oscillations and to remain securely attached to the pairs of rails 8A, 8B; 9A, 9B as it slides along the path.

[0052] In a peculiar aspect of the invention, the carriage 2 is attached to the pairs of rails 8A, 8B; 9A, 9B to alternately move from a first sliding state F_1 in which it slides along one of the pairs of rails 8A, 8B during a first lap, to a second sliding state F_2 in which it slides along the other pair of rails 9A, 9B during the next lap.

[0053] In this particular configuration of the apparatus 1, the vehicle 2 is only free to rotate about the transverse axis Y under the force of gravity once it has moved from the first sliding state F_1 to the second sliding state F_2 so that the orientation of the passengers P relative to the direction of travel W is inverted at each lap.

[0054] Conveniently, the vehicle 2 and the carriage 3 are designed so that, in the first sliding state F_1 their respective centroids, not specifically indicated in the figures, will be aligned with the transverse axis Y, and in the second sliding state F_2 the centroid of the vehicle 2 will be located between the center axis X and the carriage 3.

[0055] Therefore, the amusement apparatus 1 as described hereinbefore can invert the orientation of the passengers P relative to their direction of travel W along the path, thereby providing a new, thrilling experience to passengers P.

[0056] For clarity, the first sliding state F_1 is shown in FIGS. 1A to 3B, 8A and 8B and in FIGS. 10A and 11A, and the second sliding state F_2 is shown in FIGS. 4A to 7B and in FIGS. 10B and 11B.

[0057] The vehicle 2 of FIGS. 8A and 8B will continue to travel along the track 4 to the position as shown in FIGS. 1A and 1B.

[0058] In one embodiment, the vertical uprights 14 anchored to the ground T, or to a self-supporting base, have an upper end 14A that is rigidly joined to a support frame 15 which is designed to space the two pairs of rails 8A, 8B; 9A, 9B apart.

[0059] The path of the track 4 may have a substantially circular plan shape and comprises a departure station 18 and an arrival station 19 for the vehicle 2.

[0060] As shown in FIGS. 1A to 8B, the path of the track 4 may be substantially designed with a figure-8 plan shape with a pair of at least partially circular portions 16A, 16B joined by a pair of substantially straight portions 17A, 17B crossing at a point I.

[0061] At the circular portions 16A, 16B, the two pairs of rails 8A, 8B; 9A, 9B may be rotated about the central axis X by a total angle ranging from 0° to 180°.

[0062] This particular type of may further comprise a departure station 18 and an arrival station 19 for the vehicle 2 that are substantially coincident at the crossing I of the pair of substantially straight portions 17A, 17B, as best shown in the figures.

[0063] Nevertheless, it cannot be excluded that the number of pairs of circular portions 16A, 16B and straight portions 17A, 17B, as well as the number of first F_1 and second F_2 sliding states may vary according to the predetermined dimensions of the amusement apparatus 1 or the intention of the manager of the apparatus 1 to improve the interest and experience of use for passengers P, without departure from the scope of the invention.

[0064] Operatively, and by way of example, an example of use of the amusement apparatus 1 of the invention will be described hereinbelow, with a path configuration as shown in FIGS. 1A to 8B.

[0065] In the departure station 18, the vehicle 2 is located below the track 4, with a passenger P_A sitting on the seat 5A, oriented in the direction of travel W of the vehicle 2, and with a passenger P_B sitting on the seat 5B, oriented in a direction opposite to the direction of travel W.

[0066] In other words, the passengers P_A, P_B sit "back-to-back" and, when the motor means of the vehicle 2 are started, they move along the track 4 forward and backward respectively with respect to the direction of travel W.

[0067] In the first sliding state F_1, the vehicle 2 slides along the pair of rails 8A, 8B and travels first along the substantially straight portion 17A and then along the substantially circular portion 16A of the path until it reaches the other straight portion 17B by rotating about the center axis X by about 180° as a whole, as shown in FIGS. 1A to 3B.

[0068] In this position, the vehicle 2 can only rotate about the transverse axis Y under the force of gravity and the orientation of the passengers P_A, P_B is inverted.

[0069] In other words, the passengers P_A, P_B travel along the track 4 backward or forward respectively relative to the direction of travel W once they have moved from the first sliding state F_1 to the second sliding state F_2.

[0070] At this time, the vehicle 2 slides above the track 4, as shown in FIGS. 4A and 4B.

[0071] In the second sliding state F_2, the vehicle 2

slides along the pair of rails 9A, 9B and travels first along the substantially circular portion 16B, and then along the substantially straight portion 17A of the path for a second time until it reaches again the other circular portion 16A, as shown in FIGS. 4a to 6B.

[0072] Then, the vehicle 2 travels again along the straight portion 17B and rotates about the center axis X by about 180° as a whole, while being free to rotate about the transverse axis Y under the force of gravity, with the orientation of the passengers P_A, P_B being inverted, as shown in FIGS. 8A and 8B.

[0073] Then, the passenger P_A moves along the track 4 again forward relative to the direction of travel W and the passenger P_B reverts back to its backward orientation relative to the direction of travel W.

[0074] It will be apparent from the above that the roller-coaster amusement apparatus according to the invention achieves the intended aim and objects and in particular can invert the orientation of passengers with relative to their direction of travel along the track.

[0075] While the amusement apparatus has been described with particular reference to the accompanying figures, the numerals referred to in the disclosure are only used for the sake of a better intelligibility of the invention. The scope of protection is defined by the appended claims.

[0076] Reference herein to "one embodiment" or "the embodiment" or "some embodiments" indicates that a particular characteristic, structure or element that is being described is included in at least one embodiment of the inventive subject matter.

[0077] Furthermore, the particular characteristics, structures or elements may be combined together in any suitable manner to provide one or more embodiments.

Industrial Applicability

[0078] The present invention may find application in industry, because it can be produced on an industrial scale in factories of amusement rides for amusement parks or the like.

Claims

1. A roller-coaster amusement apparatus (1), which apparatus (1) comprises at least one vehicle (2) mounted to a carriage (3) designed to slidingly move along a track (4) and has seats (5) for passengers (P);

   wherein said carriage (3) comprises sliding means (7) for sliding along said track (4) while keeping the passengers (P) in a given orientation relative to the direction of travel (W) of said vehicle (2);
   wherein said track (4) comprises at least two pairs of rails (8A, 8B; 9A, 9B) substantially spaced apart from each other and symmetric about a center axis (X) which extends along a path shaped as a Moebius loop;
   wherein said vehicle (2) is hinged to said carriage (3) about a transverse axis (Y) substantially perpendicular to said center axis (X);
   characterized in that said carriage (3) is attached to said pairs of rails (8A, 8B; 9A, 9B) to alternately move from a first sliding state (F_1) in which it slides along one of said pairs of rails (8A, 8B) during a first lap, to a second sliding state (F_2) in which it slides along the other pair of rails (9A, 9B) during the next lap, said at least one vehicle (2) being only free to rotate about said transverse axis (Y) under the force of gravity once it has moved from said first sliding state (F_1) to said second sliding state (F_2) so that the orientation of the passengers (P) is inverted at each lap.

2. Apparatus as claimed in claim 1, **characterized in that** said vehicle (2) comprises at least one pair of mutually opposed seats (5A, 5B) aligned with the direction of travel (W) of said vehicle (2).

3. Apparatus as claimed in claim 1, **characterized in that** said vehicle (2) is operably connected to said carriage (3) via at least one support arm (10) having a first end (10A) rigidly joined to the carriage (3) and a second end (10B) with a pivot (11) for hinging said vehicle (2) about said transverse axis (Y).

4. Apparatus as claimed in claim 1, **characterized in that** said sliding means (7) comprise a plurality of wheels (13) that slide along one of said pairs of rails (8A, 8B; 9A, 9B), said plurality of wheels (13) comprising at least one first (13A) and one second pair of wheels (13B) which are opposed to each other and aligned with the rails and with respective axes of rotation (R_1, R_2) substantially parallel to and spaced apart from each other.

5. Apparatus as claimed in claim 4, **characterized in that** the rotation axes (R_1, R_2) of said first (13A) and said second (13B) pairs of wheels are parallel to said transverse axis (Y), said sliding means (7) comprising at least one third pair of wheels (13C) having respective axes of rotation (R_3) substantially perpendicular to said center axis (X) and to said transverse axis (Y).

6. Apparatus as claimed in claim 1, **characterized in that** said path is raised from the ground (T) by means of a plurality of vertical uprights (14) anchored to the ground (T) or to a self-supporting base, said uprights (14) having an upper end (14A) rigidly joined to a supporting frame (15) for supporting said two pairs of rails (8A, 8B; 9A, 9B).

7. Apparatus as claimed in claim 1, **characterized in that** said path has a substantially circular plan shape and comprises a departure station (18) and an arrival station (19) for said vehicle (2).

8. Apparatus as claimed in claim 1, **characterized in that** said path is substantially designed with a figure-8 plan shape and comprises a pair of at least partially circular portions (16A, 16B) joined by a pair of substantially straight portions (17A, 17B).

9. Apparatus as claimed in claim 8, **characterized in that** in said pair of at least partially circular portions (16A, 16B) said two pairs of rails (8A, 8B; 9A, 9B) are rotated relative to said central axis (X) by a total angle ranging from 0° to 180°.

10. Apparatus as claimed in claim 8, **characterized in that** said path comprises a departure station (18) and an arrival station (19) which are substantially coincident, said pair of substantially straight portions (17A, 17B) crossing each other at said departure and arrival stations (18, 19).

11. Apparatus as claimed in claim 1, **characterized in that** said vehicle (2) and said carriage comprise respective centroids aligned with said transverse axis (Y), the centroid of said vehicle (2) being located between said center axis (X) and said carriage (3) in said second sliding state (F_2).

Patentansprüche

1. Ein Achterbahn-Vergnügungsgerät (1), wobei das Gerät (1) mindestens ein Fahrzeug (2) umfasst, das an einem Wagen (3) montiert ist, das dazu bestimmt ist, sich entlang einer Spur (4) gleiten zu lassen, und Sitze (5) für Passagiere (P) aufweist;

   wobei der Wagen (3) Gleitmittel (7) zum Gleiten entlang der Spur (4) umfasst, während die Passagiere (P) in einer bestimmten Ausrichtung relativ zur Fahrtrichtung (W) des Fahrzeugs (2) gehalten werden;
   wobei die Spur (4) mindestens zwei Schienenpaare (8A, 8B; 9A, 9B) umfasst, die im Wesentlichen voneinander beabstandet und symmetrisch um eine Mittelachse (X) sind, die sich entlang einer als Möbius-Schleife geformten Bahn erstreckt;
   wobei das Fahrzeug (2) um eine Querachse (Y), die im Wesentlichen senkrecht zur Mittelachse (X) verläuft, an dem Wagen (3) angelenkt ist;
   dadurch gekennzeichnet, dass der Wagen (3) an den Schienenpaaren (8A, 8B; 9A, 9B) befestigt ist, um sich abwechselnd von einem ersten Gleitzustand (F_1) zu bewegen, in dem er entlang eines der Schienenpaare (8A, 8B) während einer ersten Runde gleitet, zu einem zweiten Gleitzustand (F_2) überführt, in dem es während der nächsten Runde entlang des anderen Schienenpaars (9A, 9B) gleitet, wobei das mindestens eine Fahrzeug (2) erst dann unter der Schwerkraft frei um die Querachse (Y) rotieren kann, wenn es sich von dem ersten Gleitzustand (F_1) in den zweiten Gleitzustand (F_2) bewegt hat, so dass die Ausrichtung der Passagiere (P) wird bei jeder Runde umgedreht.

2. Vorrichtung nach Anspruch 1, **dadurch gekennzeichnet, dass** das Fahrzeug (2) mindestens ein Paar einander gegenüberliegender Sitze (5A, 5B) umfasst, die mit der Fahrtrichtung (W) des Fahrzeugs (2) ausgerichtet sind.

3. Vorrichtung nach Anspruch 1, **dadurch gekennzeichnet, dass** das Fahrzeug (2) über mindestens einen Stützarm (10) betriebsmäßig mit dem Wagen (3) verbunden ist, wobei der Stützarm (10) ein erstes Ende (10A), das starr mit dem Wagen (3) verbunden ist, und ein zweites Ende mit einem Drehpunkt (11) zum Schwenken des Fahrzeugs (2) um die Querachse (Y) aufweist (10B).

4. Vorrichtung nach Anspruch 1, **dadurch gekennzeichnet, dass** die Gleitmittel (7) mehrere Räder (13) umfassen, die entlang eines der Schienenpaare (8A, 8B; 9A, 9B) gleiten, wobei die mehreren Räder (13) mindestens ein erstes (13A) und ein zweites Paar Räder (13B) umfassen, die einander gegenüberliegen und mit den Schienen ausgerichtet sind und deren jeweilige Drehachsen (R_1, R_2) im Wesentlichen parallel zueinander und voneinander beabstandet sind.

5. Vorrichtung nach Anspruch 4, **dadurch gekennzeichnet, dass** die Drehachsen (R_1, R_2) des ersten (13A) und des zweiten (13B) Radpaars parallel zur Querachse (Y) sind, wobei die Gleitmittel (7) mindestens ein drittes Paar Räder (13C) mit jeweiligen Drehachsen (R_3) umfassen, die im Wesentlichen senkrecht zur Mittelachse (X) und zur Querachse (Y) verlaufen.

6. Vorrichtung nach Anspruch 1, **dadurch gekennzeichnet, dass** die Spur vom Boden (T) mittels einer Vielzahl vertikaler Pfosten (14) angehoben wird, die am Boden (T) oder an einer selbsttragenden Basis verankert sind, wobei die Pfosten (14) ein oberes Ende (14A) aufweisen, das starr mit einem Tragrahmen (15) verbunden ist, um die beiden Schienenpaare (8A, 8B; 9A, 9B) zu tragen.

7. Vorrichtung nach Anspruch 1, **dadurch gekennzeichnet, dass** die Spur eine im Wesentlichen kreis-

förmige Grundrissform aufweist, und eine Abfahrtsstation (18) und eine Ankunftsstation (19) für das Fahrzeug (2) umfasst.

8. Vorrichtung nach Anspruch 1, **dadurch gekennzeichnet, dass** die Spur im Wesentlichen die Form einer Acht hat und ein Paar zumindest teilweise kreisförmiger Abschnitte (16A, 16B) umfasst, die durch ein Paar im Wesentlichen gerader Abschnitte (17A, 17B) verbunden sind.

9. Vorrichtung nach Anspruch 8, **dadurch gekennzeichnet, dass** in dem Paar von zumindest teilweise kreisförmigen Abschnitten (16A, 16B) die beiden Schienenpaare (8A, 8B; 9A, 9B) relativ zu der Mittelachse (X) um einen Gesamtwinkel von 0° bis 180° gedreht sind.

10. Vorrichtung nach Anspruch 8, **dadurch gekennzeichnet, dass** die Spur eine Abfahrtsstation (18) und eine Ankunftsstation (19) umfasst, die im Wesentlichen zusammenfallen, wobei sich das Paar im Wesentlichen gerader Abschnitte (17A, 17B) an den Abfahrts- und Ankunftsstationen (18, 19) kreuzt.

11. Vorrichtung nach Anspruch 1, **dadurch gekennzeichnet, dass** das Fahrzeug (2) und der Wagen jeweilige Schwerpunkte aufweisen, die mit der Querachse (Y) ausgerichtet sind, wobei der Schwerpunkt des Fahrzeugs (2) im zweiten Gleitzustand (F_2) zwischen der Mittelachse (X) und dem Wagen (3) liegt.

Revendications

1. Appareil de divertissement à montagnes russes (1), lequel appareil (1) comprend au moins un véhicule (2) monté sur un chariot (3) conçu pour se déplacer de manière coulissante le long d'une piste (4) et comporte des sièges (5) pour passagers (P);

dans lequel ledit chariot (3) comprend des moyens de coulissement (7) pour coulisser le long de ladite piste (4) tout en maintenant les passagers (P) dans une orientation donnée par rapport à la direction de déplacement (W) dudit véhicule (2);
dans lequel ladite piste (4) comprend au moins deux paires de rails (8A, 8B; 9A, 9B) sensiblement espacés l'un de l'autre et symétriques autour d'un axe central (X) qui s'étend le long d'un chemin en forme de boucle de Moebius;
dans lequel ledit véhicule (2) est articulé audit chariot (3) autour d'un axe transversal (Y) sensiblement perpendiculaire audit axe central (X);
caractérisé en ce que ledit chariot (3) est fixé auxdites paires de rails (8A, 8B; 9A, 9B) pour passer alternativement d'un premier état de coulissement (F_1) dans lequel il coulisse le long d'une desdites paires de rails (8A, 8B) lors d'un premier tour, à un deuxième état de coulissement (F_2) dans lequel il coulisse le long de l'autre paire de rails (9A, 9B) lors du tour suivant, ledit au moins un véhicule (2) étant libre en rotation uniquement autour de ladite traverse l'axe (Y) sous l'effet de la gravité une fois qu'il est passé dudit premier état de coulissement (F_1) audit second état de coulissement (F_2), de sorte que l'orientation des passagers (P) s'inverse à chaque tour.

2. Appareil selon la revendication 1, **caractérisé en ce que** ledit véhicule (2) comprend au moins une paire de sièges mutuellement opposés (5A, 5B) alignés avec la direction de déplacement (W) dudit véhicule (2).

3. Appareil selon la revendication 1, **caractérisé en ce que** ledit véhicule (2) est fonctionnellement relié audit chariot (3) via au moins un bras de support (10) ayant une première extrémité (10A) reliée rigidement au chariot (3) et un deuxième extrémité (10B) avec un pivot (11) pour faire pivoter ledit véhicule (2) autour dudit axe transversal (Y).

4. Appareil selon la revendication 1, **caractérisé en ce que** lesdits moyens de coulissement (7) comprennent une pluralité de roues (13) qui coulissent le long d'une desdites paires de rails (8A, 8B; 9A, 9B), ladite pluralité de roues (13) comprenant au moins une première (13A) et une seconde (13B) paire de roues opposées l'une à l'autre et alignées avec les rails et ayant d'axes de rotation respectifs (R_1, R_2) sensiblement parallèles et espacés l'un de l'autre.

5. Appareil selon la revendication 4, **caractérisé en ce que** les axes de rotation (R_1, R_2) de ladite première (13A) et de ladite deuxième (13B) paires de roues sont parallèles audit axe transversal (Y), lesdits moyens de coulissement (7) comprenant au moins une troisième paire de roues (13C) ayant des axes de rotation respectifs (R_3) sensiblement perpendiculaires audit axe central (X) et audit axe transversal (Y).

6. Appareil selon la revendication 1, **caractérisé en ce que** ladite piste est soulevée du sol (T) au moyen d'une pluralité de montants verticaux (14) ancrés au sol (T) ou à une base autoportante, lesdits montants (14) ayant une extrémité supérieure (14A) reliée rigidement à un cadre de support (15) pour supporter lesdites deux paires de rails (8A, 8B ; 9A, 9B).

7. Appareil selon la revendication 1, **caractérisé en ce que** ledit chemin a une forme plane sensiblement circulaire et comprend une station de départ (18) et

une station d'arrivée (19) pour ledit véhicule (2).

8. Appareil selon la revendication 1, **caractérisé en ce que** ladite piste est sensiblement conçue avec une forme plane en 8 et comprend une paire de parties au moins partiellement circulaires (16A, 16B) jointes par une paire de parties sensiblement droites (17A, 17B).

9. Appareil selon la revendication 8, **caractérisé en ce que** dans ladite paire de parties au moins partiellement circulaires (16A, 16B), lesdites deux paires de rails (8A, 8B; 9A, 9B) sont tournées par rapport audit axe central (X) d'un angle total allant de 0° à 180°.

10. Appareil selon la revendication 8, **caractérisé en ce que** ladite piste comprend une station de départ (18) et une station d'arrivée (19) qui coïncident sensiblement, ladite paire de parties sensiblement rectilignes (17A, 17B) se croisant auxdites stations de départ et d'arrivée (18, 19).

11. Appareil selon la revendication 1, **caractérisé en ce que** ledit véhicule (2) et ledit chariot comprennent des centres de gravité respectifs alignés avec ledit axe transversal (Y), le centre de gravité dudit véhicule (2) étant situé entre ledit axe central (X) et ledit chariot (3) dans ledit second état de coulissement (F_2).

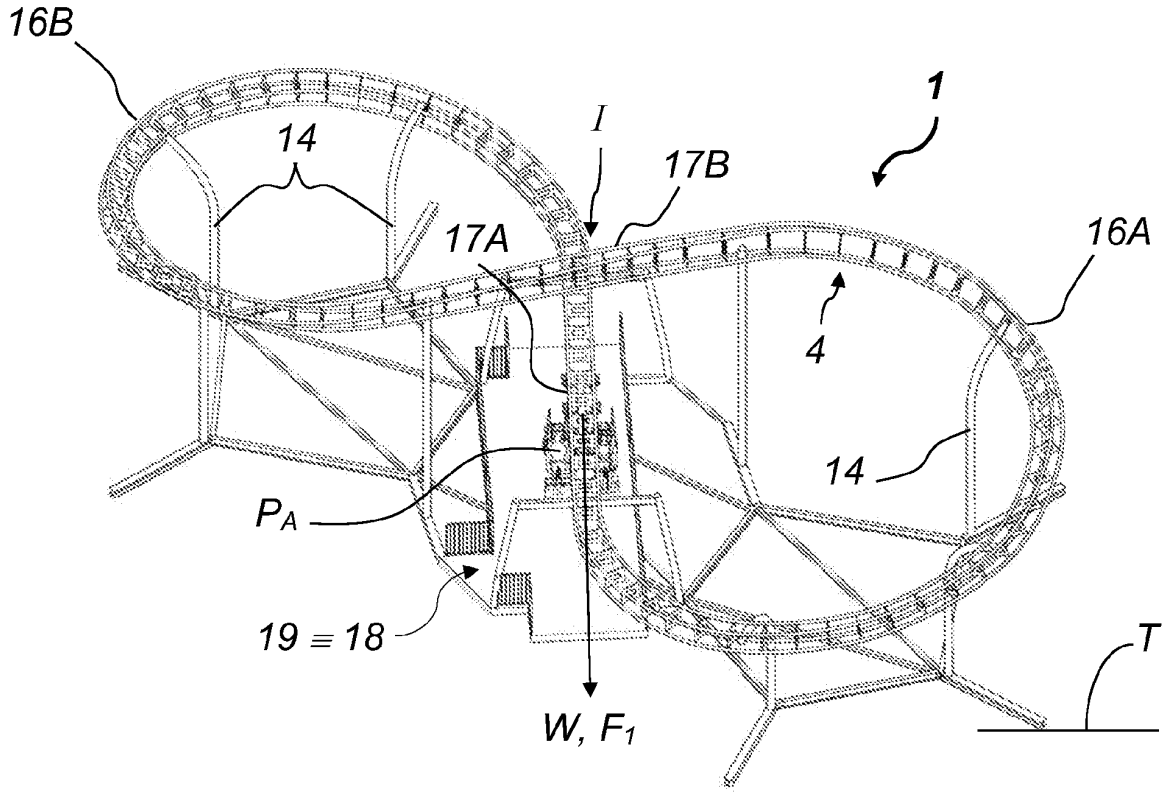
16B
14
I
17B
1
17A
16A
4
14
P_A
19 ≡ 18
T
W, F_1

FIG. 1A

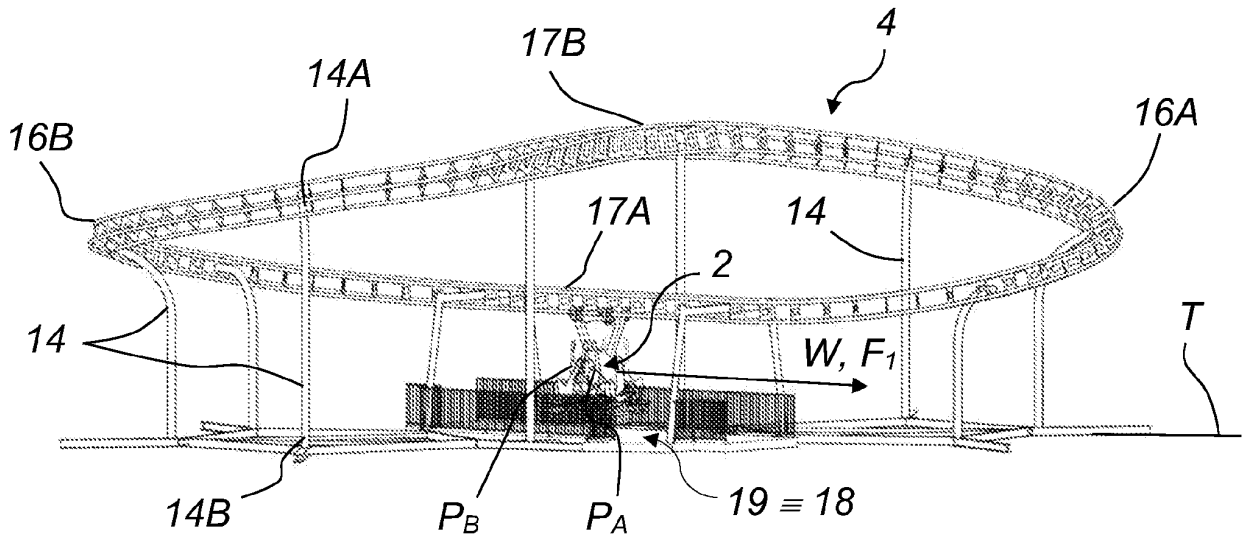
4
17B
14A
16B
16A
17A
14
2
14
T
W, F_1
14B
P_B
P_A
19 ≡ 18

FIG. 1B

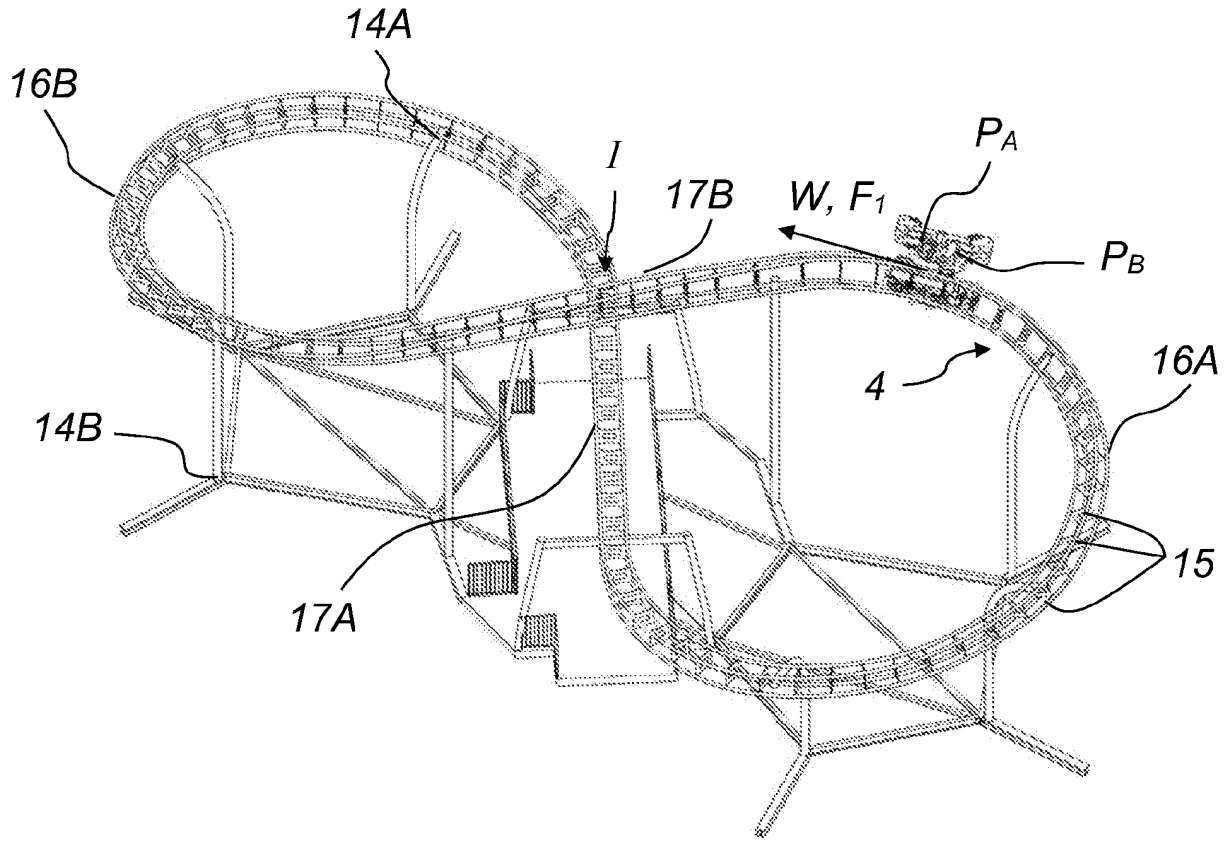
14A
16B
I
17B
W, F_1
P_A
P_B
4
16A
14B
15
17A

FIG. 2A

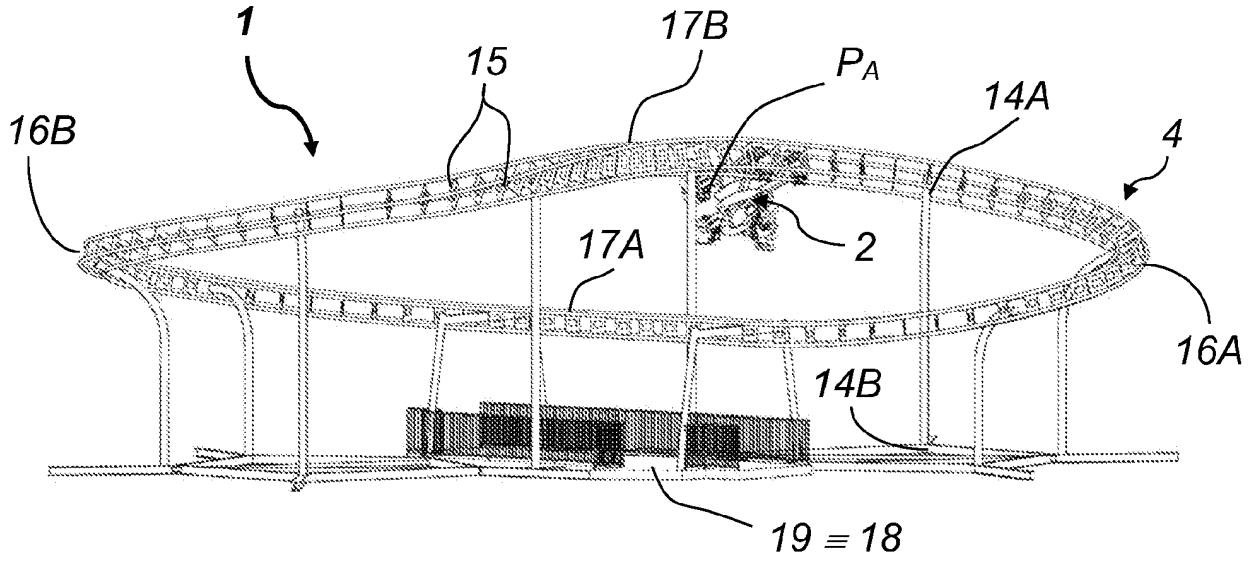
1
15
17B
P_A
14A
4
16B
2
17A
16A
14B
19 ≡ 18

FIG. 2B

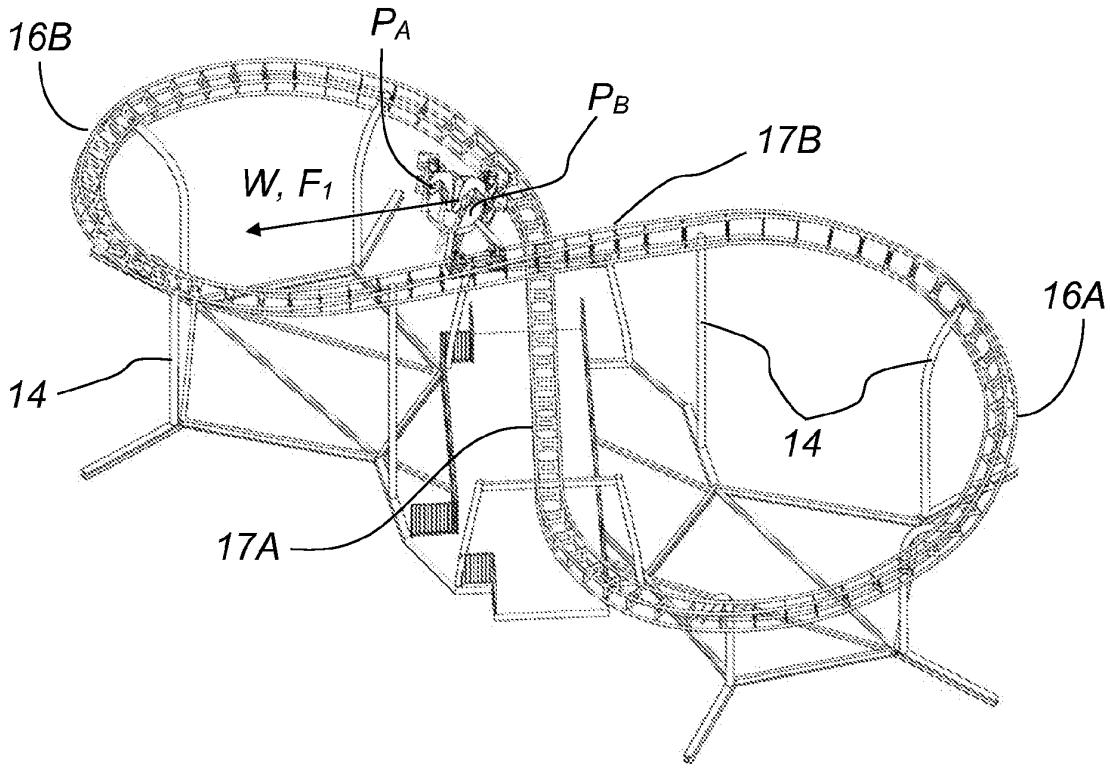
16B
P_A
P_B
17B
W, F_1
16A
14
14
17A

FIG. 3A

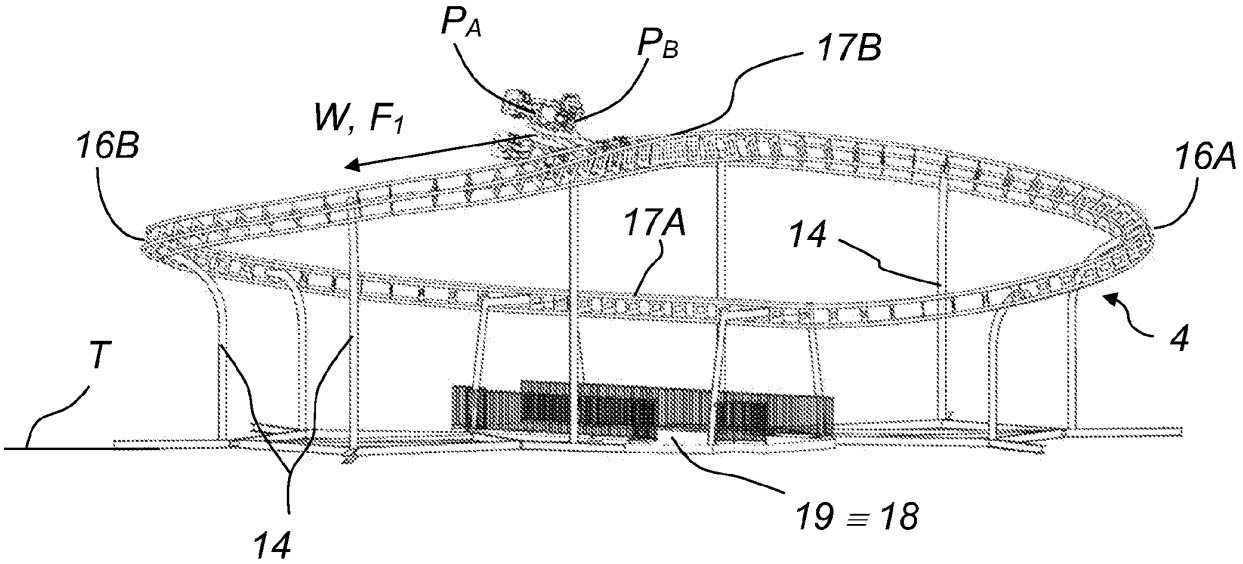
P_A
P_B
17B
W, F_1
16B
16A
17A
14
4
T
14
19 ≡ 18

FIG. 3B

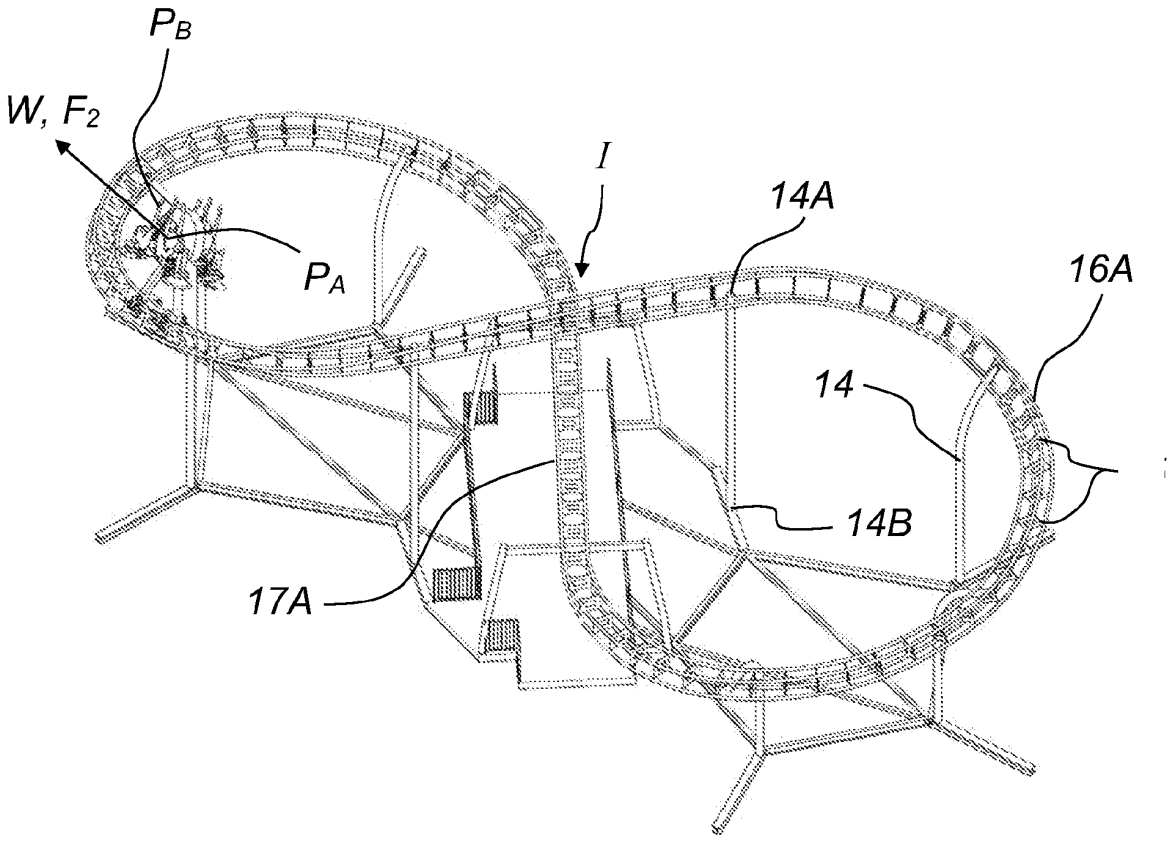

FIG. 4A

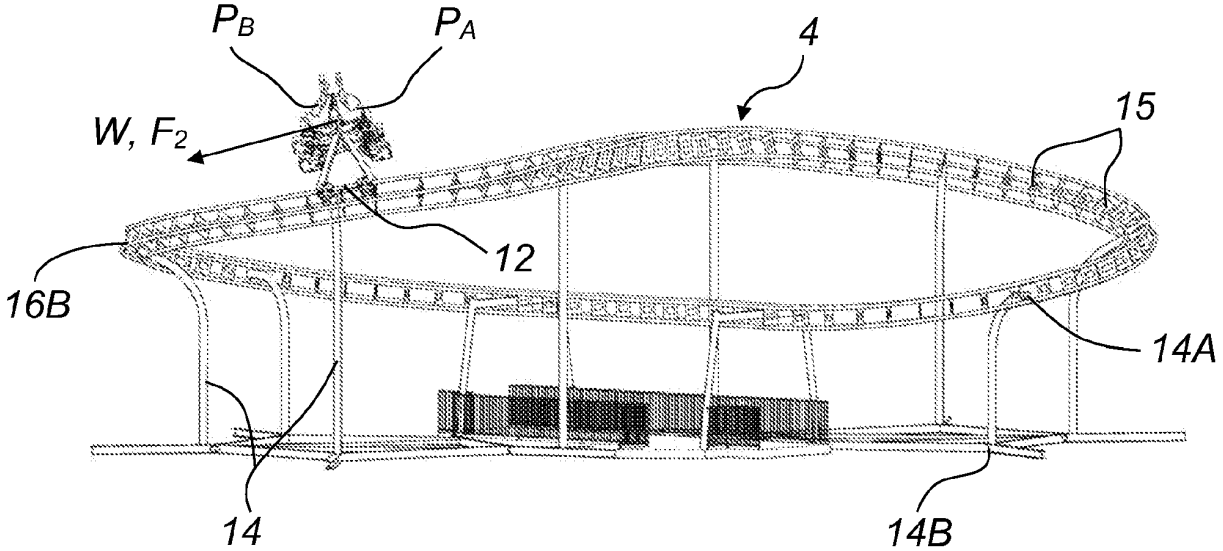

FIG. 4B

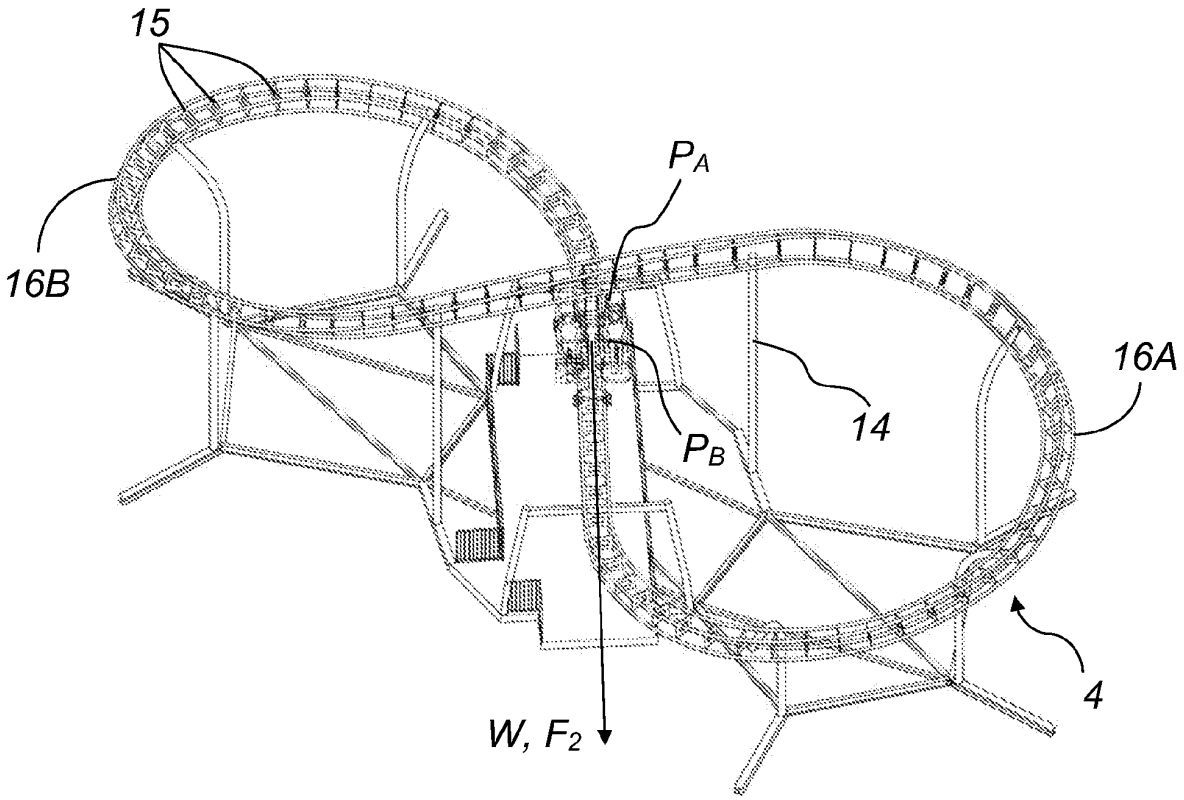

FIG. 5A

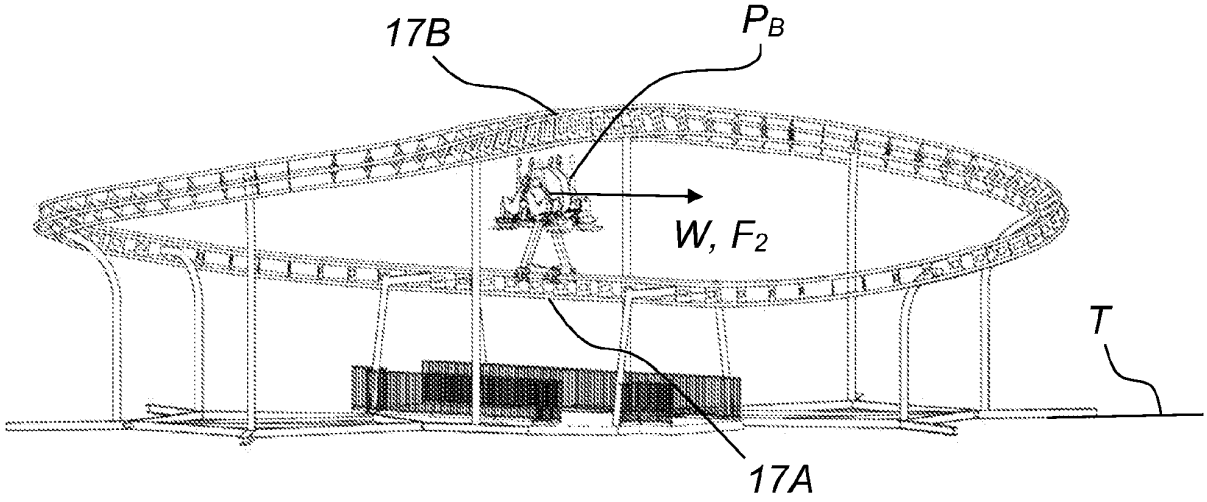

FIG. 5B

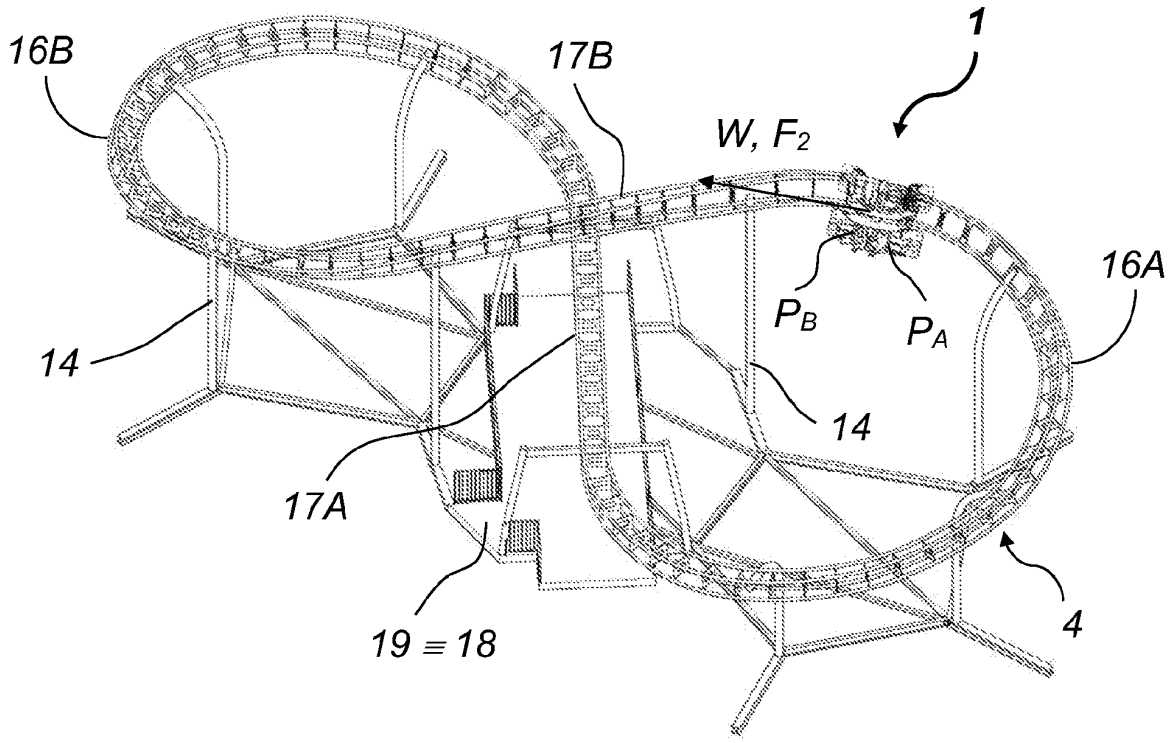
16B
17B
1
W, F_2
16A
P_B
P_A
14
14
17A
19 ≡ 18
4

FIG. 6A

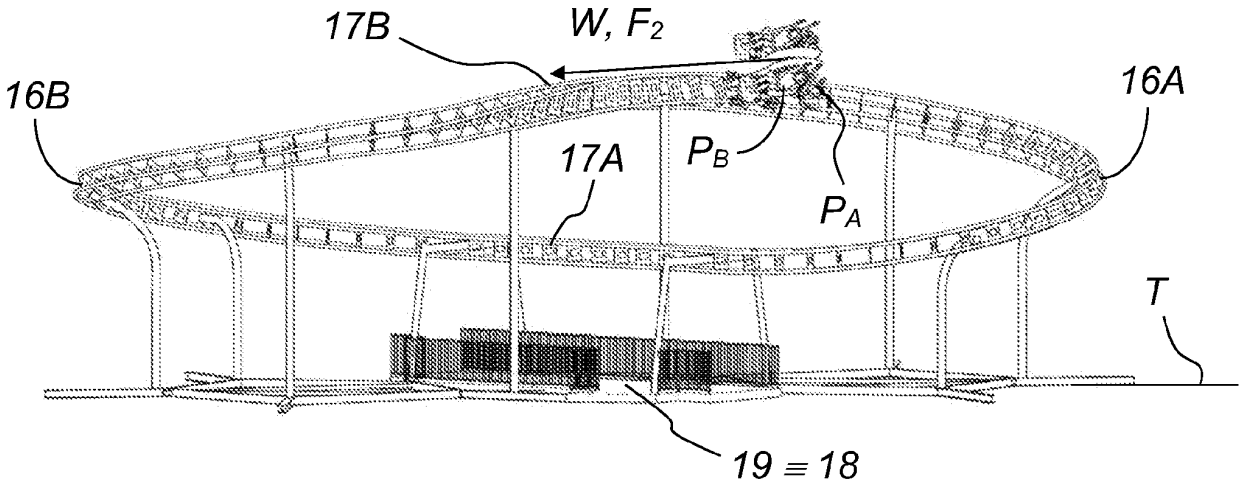
17B
W, F_2
16B
16A
17A
P_B
P_A
T
19 ≡ 18

FIG. 6B

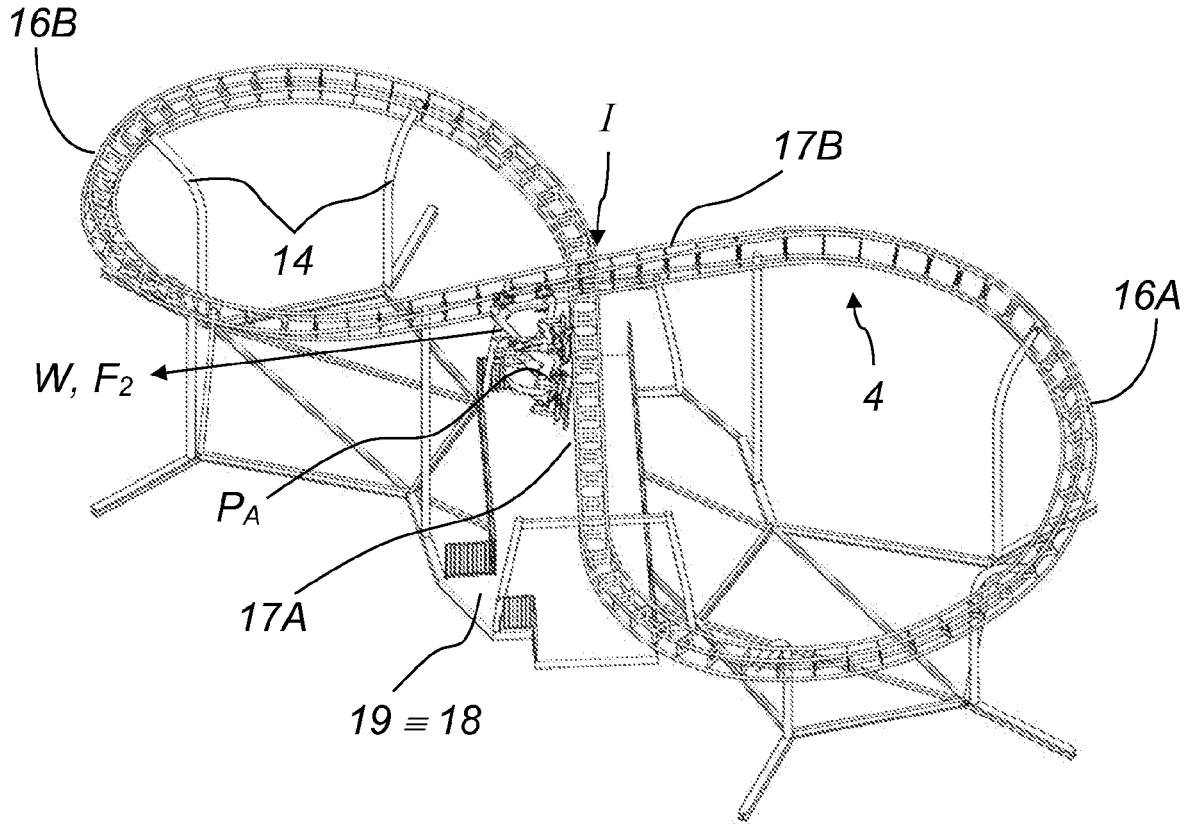

FIG. 7A

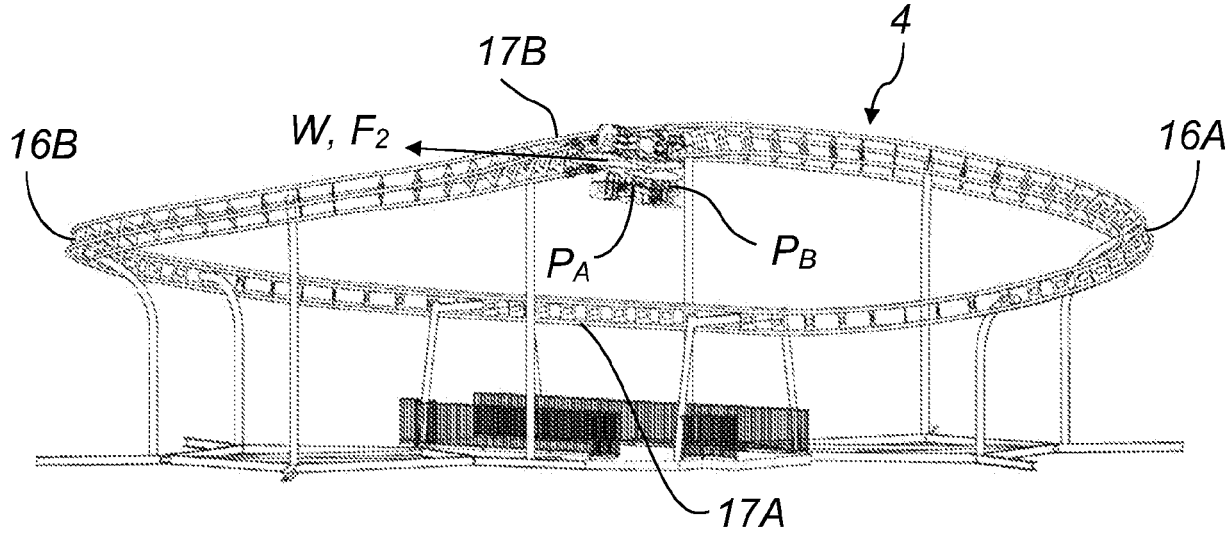

FIG. 7B

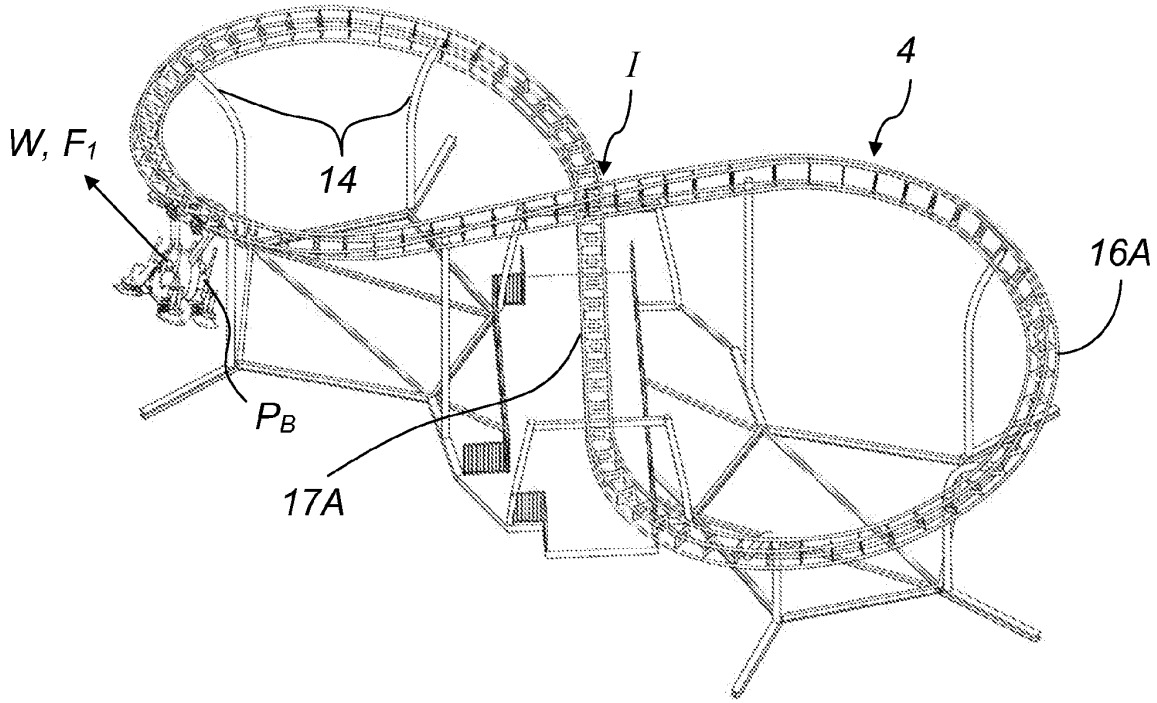

FIG. 8A

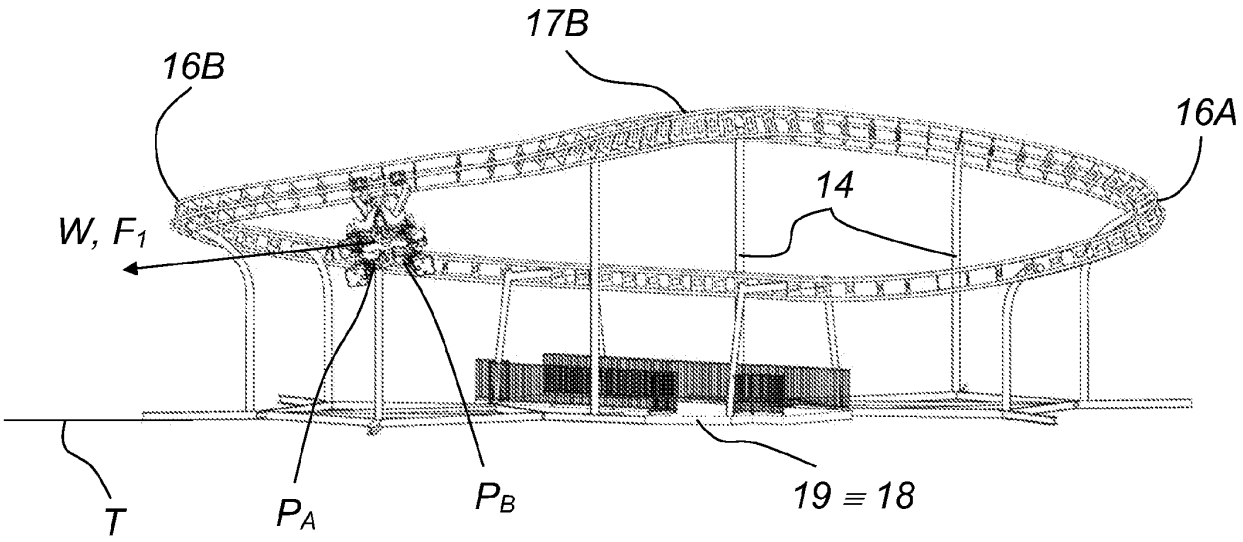

FIG. 8B

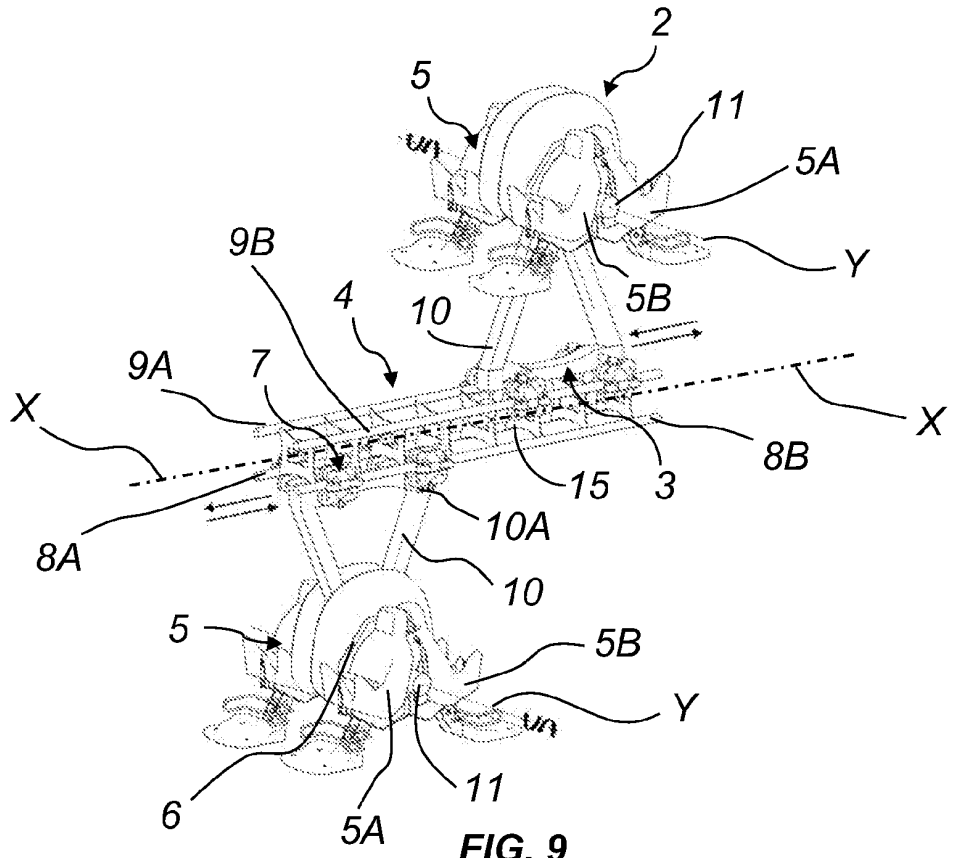

FIG. 9

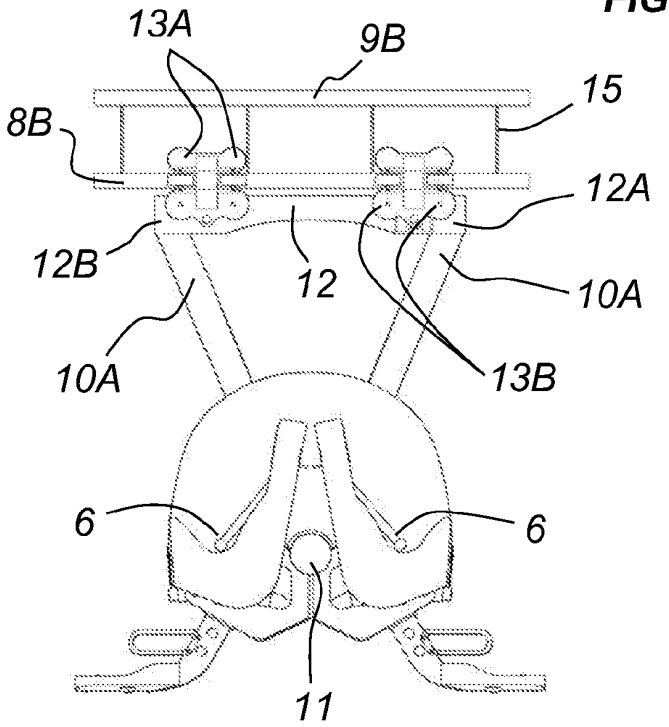

FIG. 10A

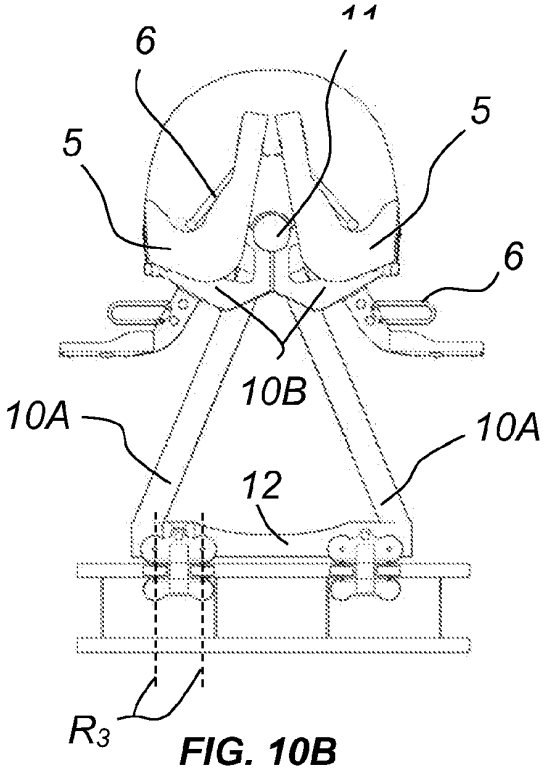

FIG. 10B

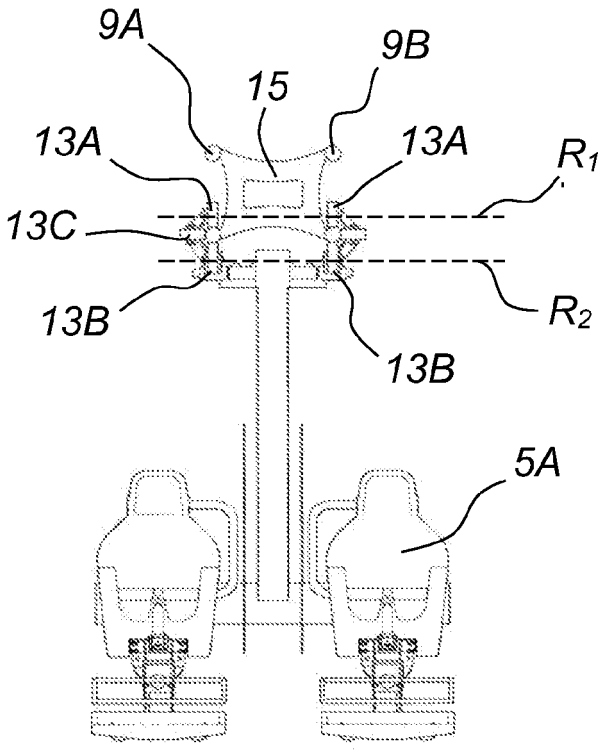

FIG. 11A

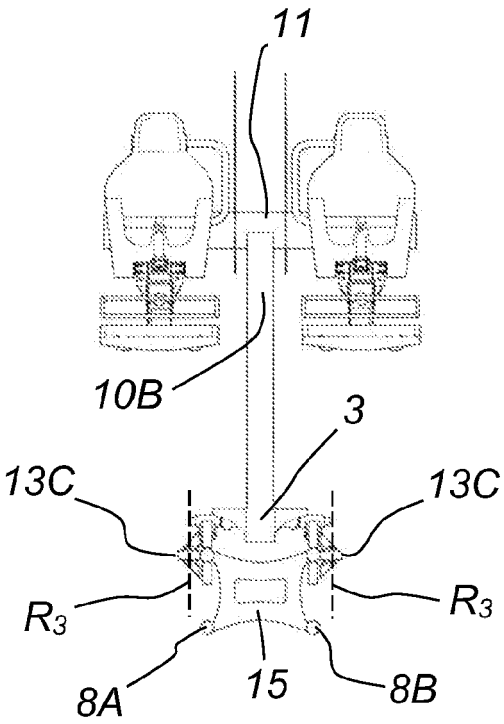

FIG. 11B

REFERENCES CITED IN THE DESCRIPTION

This list of references cited by the applicant is for the reader's convenience only. It does not form part of the European patent document. Even though great care has been taken in compiling the references, errors or omissions cannot be excluded and the EPO disclaims all liability in this regard.

Patent documents cited in the description

- US 4170943 A **[0010]**