642036

COMMONWEALTH OF AUSTRALIA

Patents Act 1952

CONVENTION APPLICATION FOR A STANDARD PATENT

~~I~~/WE, Kibbutz Evron, a corporate body of Israel,
25235 Doa Na Oshrat, Israel
Kibbutz Saar, a corporate body of Israel,
22805 Doar Na Oshrat, Israel

hereby apply for the grant of a Standard Patent for an invention entitled:

"DIAPHRAGM CONTROL VALVE"

which is described in the accompanying complete specification.

This application is made under the provision of Part XVI of the Patents Act 1952 and is based on an application for a patent or similar protection made

in Israel on 22 December 1989 (No. 92851)

~~MY~~/Our address for service is:-

F.B. RICE & CO.
28A Montague Street
BALMAIN NSW 2041

Dated this 11th day of December 1990

KIBBUTZ EVRON
KIBBUTZ SAAR

By: _____
Registered Patent Attorney

To: The Commissioner of Patents
COMMONWEALTH OF AUSTRALIA

SO18915 11/12/90

Commonwealth of Australia
The Patents Act 1952
DECLARATION IN SUPPORT

In support of the (Convention) Application made by:

1. Kibbutz Evron, a corporate body of Israel
   25235 Doar Na Oshrat, Israel; and
2. Kibbutz Saar, a corporate body of Israel, 22805 Doar Na Oshrat, Israel

for a patent for an invention entitled:

DIAPHRAGM CONTROL VALVE

~~I~~ (We) Zvi Weingarten and Moshe Weissman

of and care of ~~the applicant company~~ Kibbutz Evron and Kibbutz Saar, respectively do solemnly and sincerely declare as follows:

---

a) ~~I am (We are) the applicant(s) for the patent~~,

or

b) ~~I am~~ (We are) authorised by the applicant(s) for the patent to make this declaration on its behalf.

Delete the following if not a Convention Application.

The basic application(~~s~~) as defined by section 141 (~~142~~) of the Act was (~~were~~) made

on December 22, 1989 in Israel

on in

on in

by Bermad (a registered partnership between Kibbutz Evron and Kibbutz Saar)

The basic application(~~s~~) referred to in this paragraph is (~~are~~) the first application(~~s~~) made in a Convention country in respect of the invention the subject of the application.

---

a) ~~I am (We are) the actual inventor(s) of the invention.~~

or

b) Zvi Weingarten, of Kibbutz Evron,
   25235 Doar Na Oshrat, Israel

is (~~are~~) the actual inventor(s) of the invention and the facts upon which the applicant ~~is~~ (are) entitled to make the application are as follows:

The applicants are the assignees of the invention from the actual inventor.

Declared at ISRAEL this 27th day of Nov. 1990.

Signed ..... Status .....

Declarant's Name Z. Weingarten M. Weissman

Zvi Weingarten, Director Kibbutz Evron — Moshe Weissman, Engineering Manag Kibbutz Saar

F. B. RICE & CO PATENT ATTORNEYS

This form is suitable for any type of Patent Application. No legalisation required.

AU9067951

(12) PATENT ABRIDGMENT (11) Document No. AU-B-67951/90
(19) AUSTRALIAN PATENT OFFICE (10) Acceptance No. 642936

(54) Title
DIAPHRAGM CONTROL VALVE

International Patent Classification(s)
(51)[5] **F16K 007/14**

(21) Application No. : **67951/90** (22) Application Date : **11.12.90**

(30) Priority Data

(31) Number	(32) Date	(33) Country
92851	**22.12.89**	**IL ISRAEL**

(43) Publication Date : **27.06.91**

(44) Publication Date of Accepted Application : **04.11.93**

(71) Applicant(s)
KIBBUTZ EVRON; KIBBUTZ SAAR

(72) Inventor(s)
ZVI WEINGARTEN

(74) Attorney or Agent
F B RICE & CO , 28A Montague Street, BALMAIN NSW 2041

(56) Prior Art Documents
US 4505450
AU 43223/85 F16K 47/02 7/12
CH 304128

(57) Claim

1. A diaphragm control valve, comprising: a housing having an inlet, an outlet, and a passageway circumscribed by a valve seat for the flow of fluid from the inlet to the outlet; and a valve member including a diaphragm within said housing and displaceable towards or away from said valve seat to control the flow therethrough; said diaphragm including an outer peripheral section secured over an opening in the housing in alignment with said valve seat, a valve-closer section displaceable with respect to the valve seat for controlling the flow therethrough, an intermediate flexible section permitting the displacement of said valve-closer section, and a cylindrical guiding section between the valve-closer section and the intermediate flexible section; characterized in that said housing includes a wall defining a control chamber between it and the diaphragm, and means for pressurizing said control chamber to thereby displace said valve-closer section of the diaphragm towards said valve seat; said housing

.../2

further including a cylindrical guiding surface between said opening in the housing and said valve seat, and engageable with said cylindrical guiding section of the diaphragm for guiding the movement of said valve-closer section of the diaphragm; said cylindrical guiding section of the diaphragm being sufficiently resilient such that when the control chamber is pressurized to displace the valve-closer section towards the valve seat, the differential pressure between that in the control chamber and said valve outlet displaces said cylindrical guiding section outwardly to cause it to be firmly pressed against the cylindrical guiding surface of the housing, and thereby to restrain the valve-closer section from vibrating or from slamming to a closed position.

642936

COMMONWEALTH OF AUSTRALIA

Patents Act 1952

COMPLETE SPECIFICATION

(ORIGINAL)

	Class	Int. Class
Application Number	:	
Lodged	:	
Complete Specification Lodged	:	
Accepted	:	
Published	:	
Priority	:	22 December 1989
Related Art	:	

Name of Applicant	:	Kibbutz Evron Kibbutz Saar
Address of Applicant	:	25235 Doa Na Oshrat, Israel 22805 Doar Na Oshrat, Israel
Actual Inventor(s)	:	Zvi Weingarten
Address for Service	:	F.B. RICE & CO., Patent Attorneys 28A Montague Street BALMAIN NSW 2041

Complete Specification for the invention entitled:

"DIAPHRAGM CONTROL VALVE"

The following statement is a full description of this invention including the best method of performing it known to us/me:-

DIAPHRAGM CONTROL VALVE

The present invention relates to diaphragm valves, such as are used as shut-off valves, as well as flow-responsive or pressure-responsive regulator valves.

A large number of diaphragm control valves have been developed. Typically, they comprise a housing having an inlet, an outlet, and a passageway circumscribed by a valve seat for the flow of fluid from the inlet to the outlet; and a valve member including a diaphragm within the housing and displaceable towards or away from the valve seat to control the flow therethrough. The diaphragm includes an outer peripheral section secured over an opening in the housing in alignment with the valve seat, a valve-closer section displaceable with respect to the valve seat for controlling the flow therethrough, an intermediate flexible section permitting the displacement of the valve-closer section, and a cylindrical guiding section between the valve-closer section and the intermediate flexible section. The known valves of this type, however, are usually characterized by relatively high pressure drops, turbulence, and other poor flow characteristics, and/or by producing a high degree of "chatter" during the closing of the valve.

According to the present invention, there is provided a diaphragm control valve comprising: a housing having an inlet, an outlet, and a passageway circumscribed by a valve seat for the flow of fluid from the inlet to the outlet; and a valve member including a diaphragm within the housing and displaceable towards or away from the valve seat to control the flow therethrough; the diaphragm including an outer peripheral section secured over an opening in the housing in alignment with the valve seat, a valve-

AUSTRALIAN PATENT OFFICE

closer section displaceable with respect to the valve seat for controlling the flow therethrough, an intermediate flexible section permitting the displacement of the valve-closer section, and a cylindrical guiding section between the valve-closer section and the intermediate flexible section; characterized in that the housing includes a wall defining a control chamber between it and the diaphragm, and means for pressurizing the control chamber to thereby displace the valve-closer section of the diaphragm towards the valve seat; the housing further including a cylindrical guiding surface between the opening in the housing and the valve seat, and engageable with the cylindrical guiding section of the diaphragm for guiding the movement of the valve-closer section of the diaphragm; the cylindrical guiding section of the diaphragm being sufficiently resilient such that when the control chamber is pressurized to displace the valve-closer section towards the valve seat, the differential pressure between that in the control chamber and the valve outlet displaces the cylindrical guiding section outwardly to cause it to be firmly pressed against the cylindrical guiding surface of the housing, and thereby to restrain the valve-closer section from vibrating or from slamming to a closed position.

This combination of features produces a more efficient and quieter operation than in the diaphragm control valves of the above prior art. Thus, when the control chamber is pressurized to displace the valve-closer section towards the valve seat, the differential pressure between the control chamber and the outlet displaces the cylindrical guiding section of the diaphragm outwardly to cause it to firmly press against the cylindrical guiding section of the housing, to

AUSTRALIAN PATENT OFFICE

thereby restrain the valve-closer section from vibrating or from slamming to a closed position.

Further features and advantages of the invention will be apparent from the description below. In the drawings:

Fig. 1 is a transverse sectional view illustrating one form of diaphragm valve constructed in accordance with the present invention, the valve being in its closed position;

Fig 2 is a view similar to that of Fig. 1 but illustrating the valve in its open position;

Fig. 3 is a top view illustrating the valve of Figs. 1 and 2 with the cover removed;

Fig. 4 is a bottom view illustrating the cover in the valve of Figs. 1 and 2; and

AUSTRALIAN PATENT OFFICE

Fig. 5 illustrates a diaphragm valve of the type including a closing stem constructed in accordance with the invention.

The valve illustrated in Figs. 1-4 of the drawings comprises a housing, generally designated 2, formed with an inlet 4, an outlet 6, and a passageway 8 circumscribed by valve seat 10 for the flow of fluid, e.g., water, from the inlet to the outlet. Housing 2 further includes a valve member, generally designated 12, disposed within the housing 2 and displaceable towards or away from the valve seat 10 to control the flow of the fluid therethrough. When the valve is in a closed condition, valve member 12 engages seat 10 to seal it closed. When the valve is a regulator valve, valve member 12 would be displaceable towards and away from seat 10 so as to regulate the flow of the fluid therethrough. The regulation may be either in response to flow if the valve effects flow regulation, or in response to pressure if the valve effects pressure regulation.

Valve member 12 is constituted of two main components, namely a diaphragm 14 of elastomeric material, and an insert 16 of rigid material, such as metal.

Diaphragm 14 includes an outer peripheral section 14a for securing the diaphgram within the housing; a valve-closer section 14b displaceable with respect to the valve seat 10 for controlling the flow therethrough; an intermediate flexible section 14c permitting the displacement of section 14b; and a cylindrical guiding section 14d between sections 14b and 14c. It further includes a central circular projection or stem 14e, of frusto-conical configuration, projecting from the inner face of section 14b.

Diaphragm 14 is further formed with a bevelled outer surface, as shown at 14f, which improves the seal effected upon seating diaphragm section 14b against the valve seat 10, as will be described below.

The rigid insert 16 is formed with a cylindrical side wall 16a engaging the inner surface of section 14d of the diaphragm; a circular end wall 16b engaging the inner surface of diaphragm section 14b; and a central opening 16c for receiving the central projection 14e of the diaphragm.

Housing 2 further includes a cover or bonnet 20 which engages the outer peripheral section 14a of the diaphragm 14 and secures it, e.g., by bolts passing through openings 21 (Fig. 3) in a flange 22 formed in the housing. The housing further includes a cylindrical guiding surface 24 engageable with the outer surface of the cylindrical guiding section 14d of the diaphragm.

Cover 20 thus defines a chamber 26 between it and the valve member 12. A spring 28 is disposed within this chamber and urges the valve member 12, and particularly its diaphragm 14, to the closed position against seat 10, as shown in Fig. 1. The inner face of cover 20 is formed with a plurality of ribs 29 for limiting the inward movement of diaphragm 14 when moved to its open position, as shown in Fig. 2.

Cover 20 further includes one or more ports 30 which may be connected via a line 31 to a pilot valve, such as shown at 32 in Fig. 1, for controlling the pressure within chamber 26. The pressure within that chamber, as well as the force of spring 28, are both resisted by the inlet pressure which is applied to the opposite face of diaphragm 14. In one position (the full line position) of pilot valve 32, it connects its port 32a to port 32b, thereby applying the inlet pressure via lines 33 and 31 to the control chamber 26;

and in another position of the pilot valve (the broken-line position), it connects control chamber 26 to the atmosphere via port 32c. When the valve is in its closed condition, it is held closed by the differential pressure across the valve which acts upon the differential areas of the diaphragm (diameter "D" minus diameter "d"), plus the force of the spring.

Housing 2 is further formed with a smoothly converging inlet throat 34 immediately upstream of the valve passageway 8, and a smoothly diffusing section 35 immediately downstream of the passageway. It will be seen in Fig. 1 that both the housing inlet 4 and the housing outlet 6 have a common axis 36. The axis of the throat section 38 is between 35° and 45°, preferably about 40°, with respect to the common axis 36 of the inlet and outlet.

Housing 2 is further formed with an annular flange 40 at its inlet 4 for attaching the housing to the upstream pipe, and another annular flange 42 at its outlet end 6 for attaching the housing to the downstream pipe.

The operation of the valve will now be described.

When pilot valve 32 is in the broken-line position illustrated in Fig. 1, port 32a is connected to the atmosphere via port 32c, and therefore control chamber 26 will be vented to the atmosphere. If the inlet 4 is not connected to a pressurized fluid, spring 28 will move valve member 12 to its closed position as illustrated in Fig. 1. If, however, pressurized fluid is applied to inlet 4, the inlet pressure applied to the upstream face of diaphragm 14 will be sufficient to overcome the force of spring 28, and will thereby move the valve to its open position.

Whenever it is desired to close the valve, pilot valve 32 is actuated to its full line position,

connecting the inlet pressure to the control chamber 26 via ports 32b, 32a. This substantially balances the forces on the opposite sides of valve member 12, so that spring 28 starts the valve member 12 to move to its closed position.

The movement of the valve member 12 towards the closed position is stabilized by the construction of diaphgram 14 and rigid insert 16 in the following respects:

During the closing movements of the valve member 12, the downstream pressure starts to drop as the valve member 12 moves closer to the valve seat 10. The upstream pressure within chamber 26 thus displaces the resilient cylindrical guiding section 14d of the diaphragm 14 outwardly, pressing that section against the cylindrical guiding surface 24 of the housing. This action guides the downward movement of the diaphragm towards the valve seat 10 and restrains the diaphragm from slamming to close, or from vibrating. The rigid cylindrical side wall 16a of rigid insert 16 also restrains the diaphragm from lateral movement. The lateral movement of the diaphragm is further restrained by projection 14e of the diaphragm engaging the edge of the opening in end wall 16b of the rigid insert 16.

In addition, the upstream pressure within chamber 26 produces a concentration of forces at the juncture of the bevelled surface 14f of the diaphgram with respect to the remainder of the diaphragm section 14b. This produces an effective annular projection which engages the valve seat 10 thereby enhancing the seal between the diaphragm sealing section 14b and the valve seat. However, during normal flow, this annular projection is not produced and therefore cannot interfere with the flow through the valve passageway.

Further, the 40° angle between the axis 38 of the inlet throat 32 with respect to the inlet axis 36,

and the smooth junctures of the inlet throat immediately upstream and downstream of the valve seat 10, greatly improve the flow characteristics of the fluid through the valve opening 8, reducing turbulence, and decreasing the pressure drop though the valve during the normal operation of the valve.

The foregoing advantages, particularly the improved diaphragm stabilized guiding characteristics, also apply when the valve is used to perform a flow-regulator or pressure-regulator function. The valve is controlled by the pressure in control chamber 26 applied by a pilot valve capable of providing a regulating pressure in chamber 26, rather than an on/off pressure. It will be appreciated that when the valve is used for regulation, section 14b of diaphragm 14 moves towards and away from valve seat 10 to control the rate of flow through passageway 8, rather than completely shutting-off the flow through that passageway.

Fig. 5 illustrates a diaphragm valve of the same construction as described above, except that the valve member, generally designated 112, may also be closed by a rotatable stem 140 rotatable by a handle 142 at one end and engageable with a bearing plate 144 provided on the inner surface of the rigid insert 116 of the valve member. Both the diaphragm 114, and the rigid insert 116, of the valve member 112, are constructed as described above, operate in substantially the same manner, and provide substantially the same advantages, except that the valve may also be closed and kept closed manually by rotating handle 142.

THE CLAIMS DEFINING THE INVENTION ARE AS FOLLOWS

1. A diaphragm control valve, comprising: a housing having an inlet, an outlet, and a passageway circumscribed by a valve seat for the flow of fluid from the inlet to the outlet; and a valve member including a diaphragm within said housing and displaceable towards or away from said valve seat to control the flow therethrough; said diaphragm including an outer peripheral section secured over an opening in the housing in alignment with said valve seat, a valve-closer section displaceable with respect to the valve seat for controlling the flow therethrough, an intermediate flexible section permitting the displacement of said valve-closer section, and a cylindrical guiding section between the valve-closer section and the intermediate flexible section; characterized in that said housing includes a wall defining a control chamber between it and the diaphragm, and means for pressurizing said control chamber to thereby displace said valve-closer section of the diaphragm towards said valve seat; said housing further including a cylindrical guiding surface between said opening in the housing and said valve seat, and engageable with said cylindrical guiding section of the diaphragm for guiding the movement of said valve-closer section of the diaphragm; said cylindrical guiding section of the diaphragm being sufficiently resilient such that when the control chamber is pressurized to displace the valve-closer section towards the valve seat, the differential pressure between that in the control chamber and said valve outlet displaces said cylindrical guiding section outwardly to cause it to be firmly pressed against the cylindrical guiding surface of the housing, and thereby to restrain the valve-

AUSTRALIAN PATENT OFFICE

closer section from vibrating or from slamming to a closed position.

2. The valve according to Claim 1, wherein said diaphragm is a single unit of elastomeric material integrally formed with said outer peripheral section, valve-closer section, intermediate flexible section, and cylindrical guiding section.

3. The valve according to Claim 2, wherein said valve seat is of circular configuration and is of a smaller diameter than that of said cylindrical guiding section of the diaphragm.

4. The valve according to any one of Claims 1-3, wherein said housing wall defining said control chamber is a cover removably attached to the remainder of said housing.

5. The valve according to any one of Claims 1-4, further including a rotatable stem passing through a wall of said housing and bearing against said valve member for moving same towards or away from its valve seat.

6. The valve according to any one of Claims 1-5, wherein said valve member further includes a rigid insert having a cylindrical side wall engaging the inner surface of said cylindrical guiding section of the diaphragm, and a circular end wall engaging the inner surface of said valve-closer section of the diaphgram.

7. The valve according to Claim 6, wherein said inner surface of the valve-closer section of the diaphragm is formed with a central projection, and said end wall of the rigid insert is formed with a hole receiving said central projection.

8. The valve according to any one of Claims 1-7, wherein said valve-closer section of the diaphragm is bevelled on its outer surface.

AUSTRALIAN PATENT OFFICE

9. The valve according to any one of Claims 1-8, wherein said outer peripheral section of the diaphragm is secured between a flange formed in the valve housing, and a cover attached to said flange, said cover being formed with internal ribs for limiting the displacement of the diaphragm.

10. The valve according to any one of Claims 1-9, wherein said housing is formed with a converging throat section immediately upstream of the passageway, and with a diffuser section immediately downstream of said passageway, and wherein said housing inlet and outlet on a common axis, and the axis of said throat section is 35-45° with respect to said common axis.

11. A diaphragm control valve as hereinbefore described with reference to and as shown in the accompanying drawings.

DATED this 25th day of August 1993

KIBBUTZ EVRON AND KIBBUTZ SAAR
Patent Attorneys for the Applicant:

F.B. RICE & CO.

AUSTRALIAN PATENT OFFICE

FIG 1

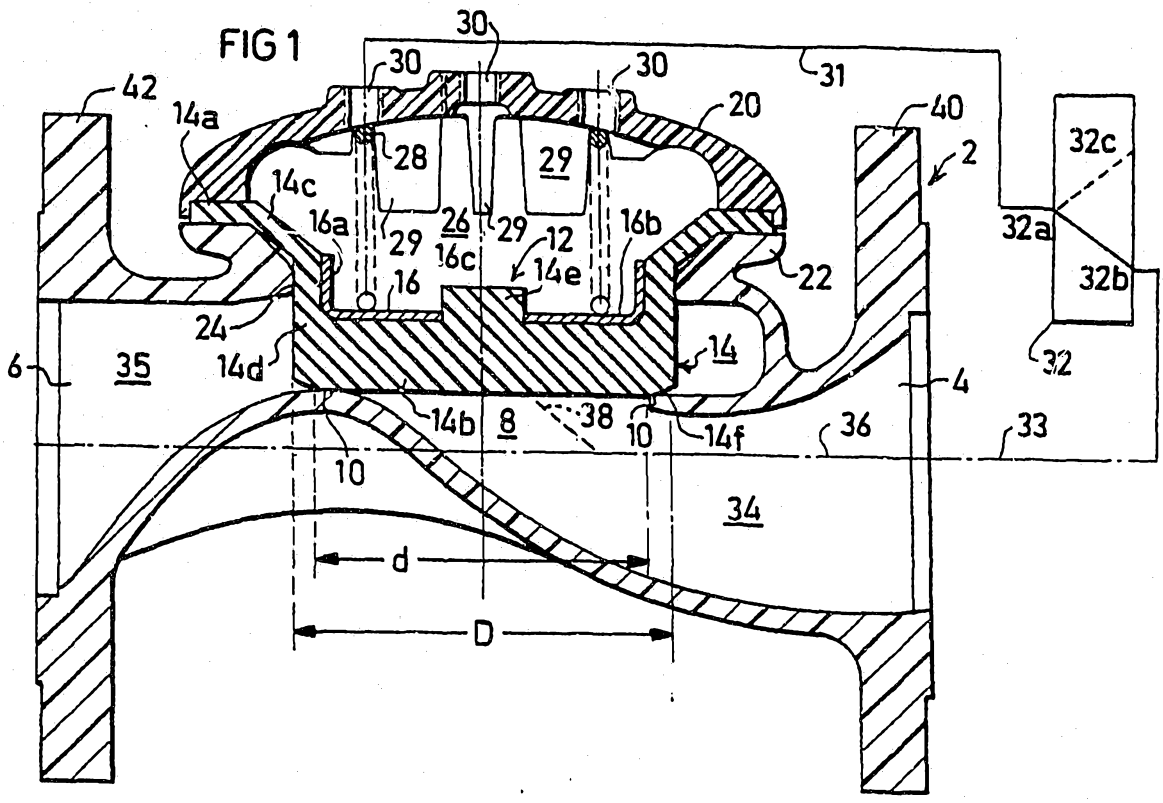
30
30
30
31
42
14a
20
40
2
32c
28
29
14c
16a
26
29
29
12
16b
32a
16c
14e
22
32b
16
24
14d
14
6
35
4
32
14b
8
38
10
14f
36
33
10
34
d
D

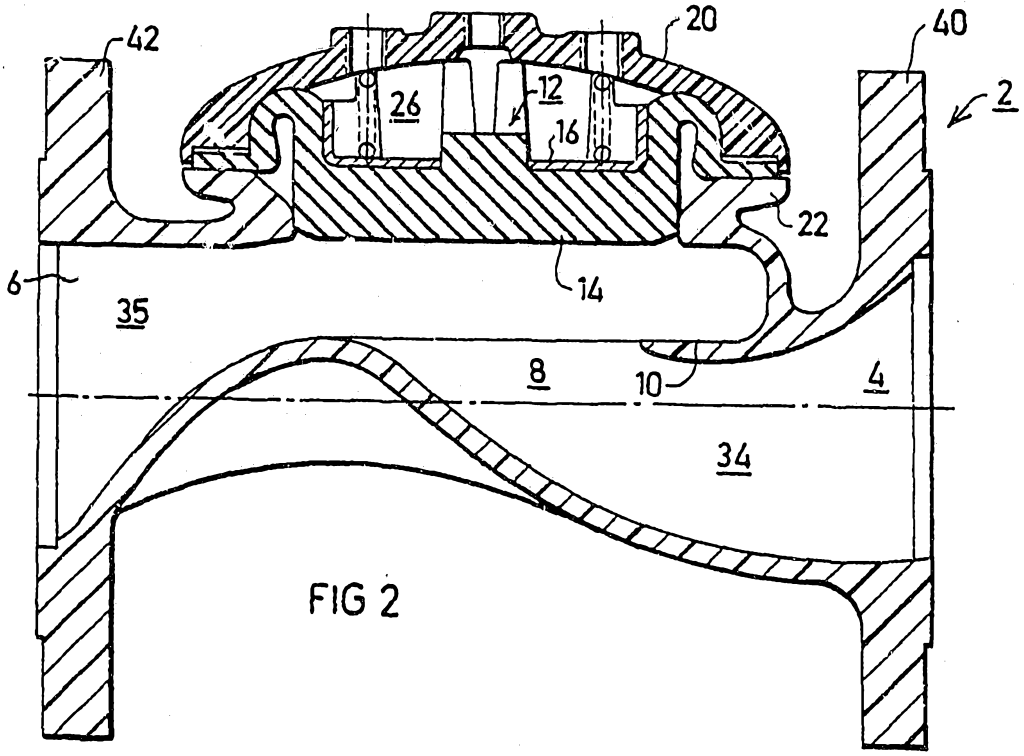
42
20
40
2
26
12
16
22
6
14
35
8
10
4
34

FIG 2

FIG 3

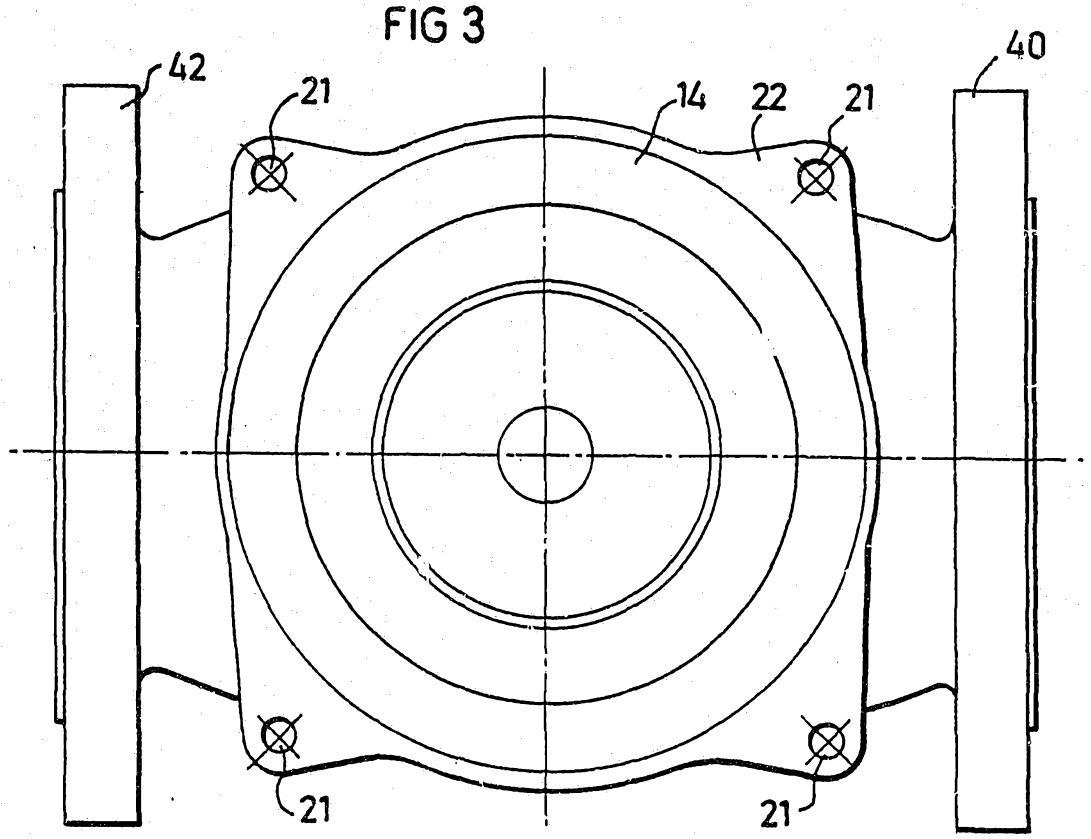

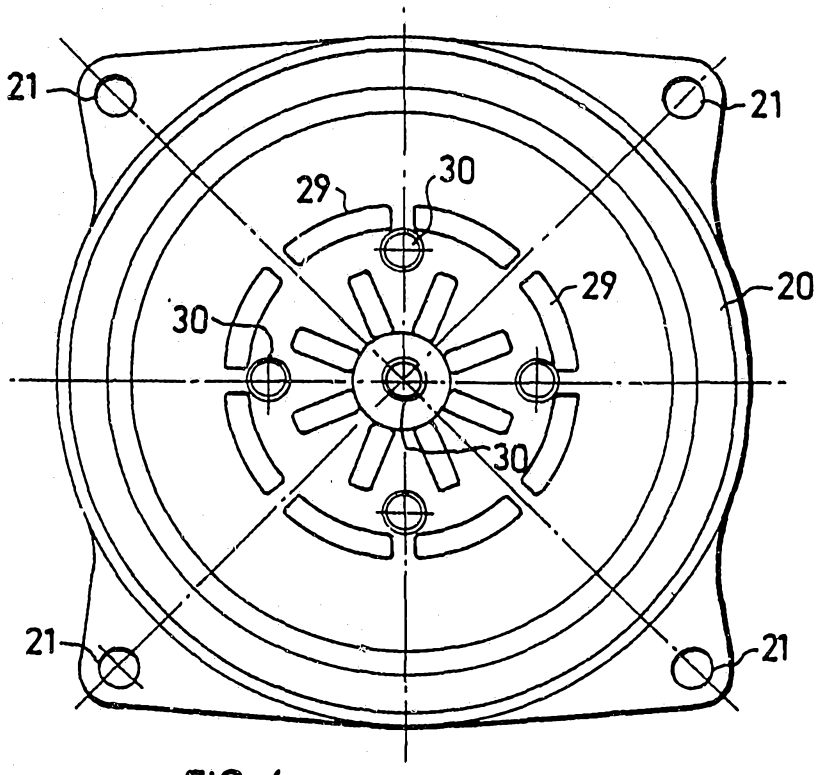

FIG 4

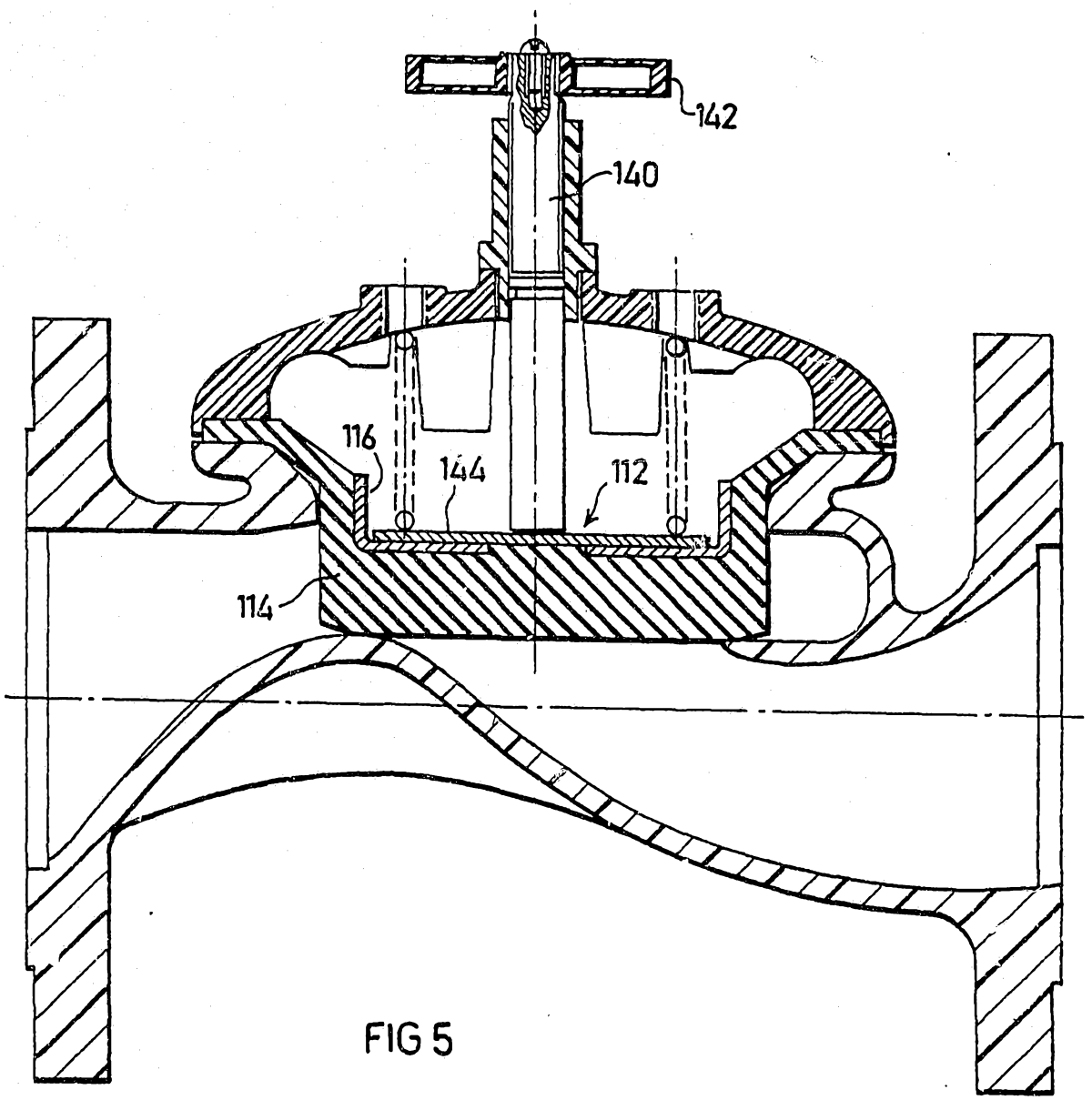

FIG 5