Jan. 21, 1936. J. B. HOWE 2,028,544

AUTOMATIC WEIGHING MACHINE

Filed March 28, 1933 6 Sheets-Sheet 1

Fig. 1

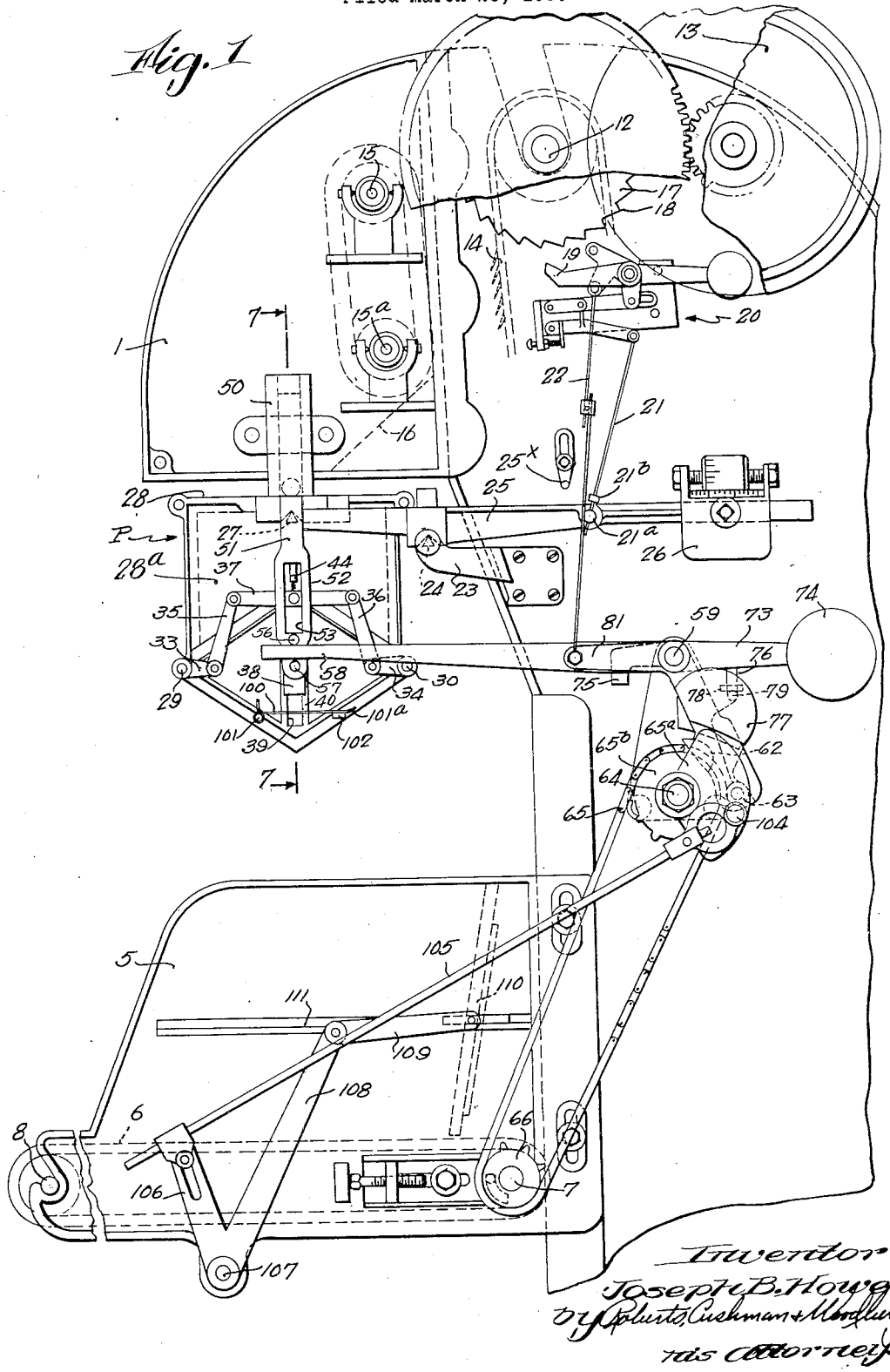

Inventor:
Joseph B. Howe
By Pruett, Cushman & Mordhurst
His Attorneys

Jan. 21, 1936. J. B. HOWE 2,028,544

AUTOMATIC WEIGHING MACHINE

Filed March 28, 1933 6 Sheets-Sheet 2

Fig. 2

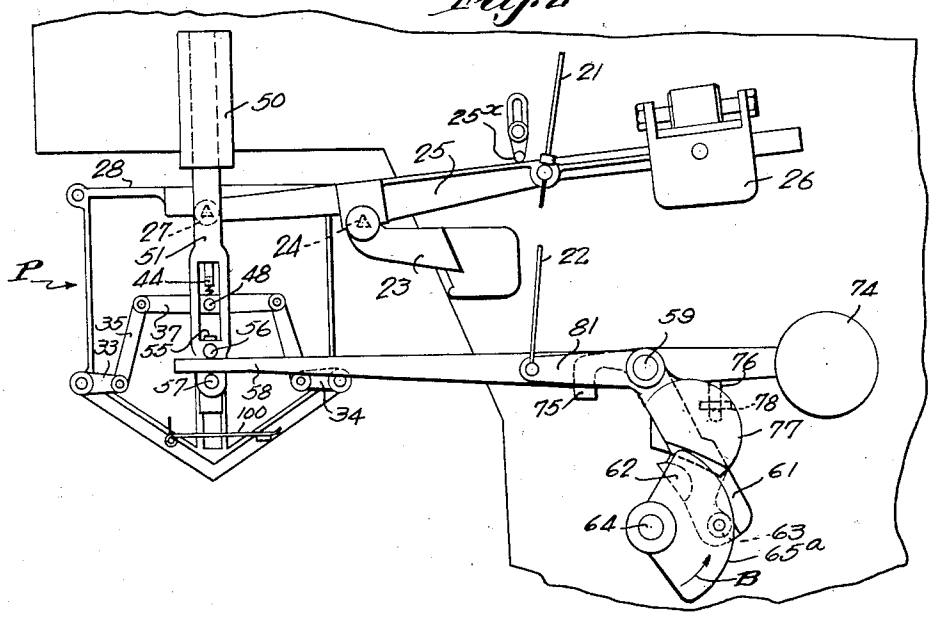

Fig. 3

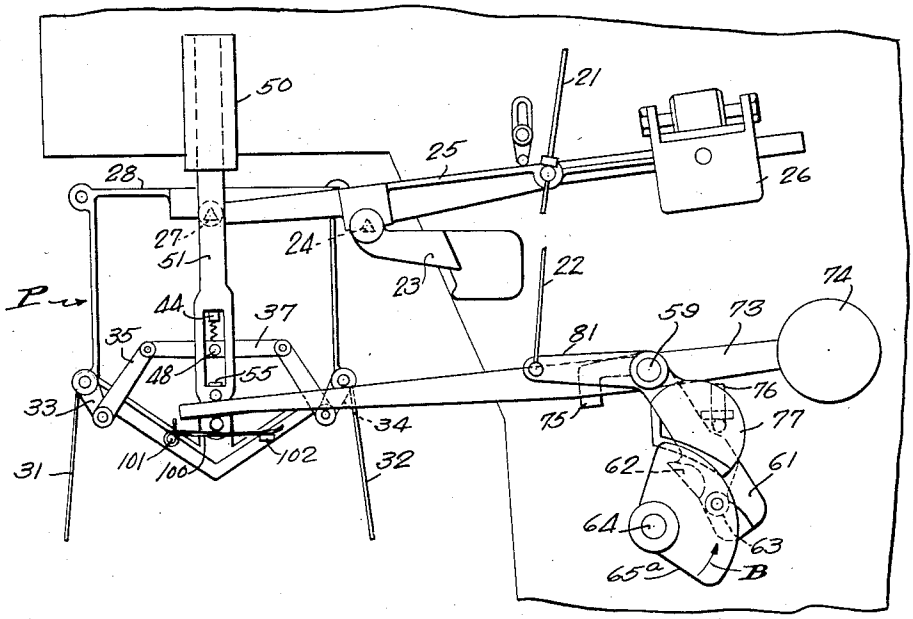

Inventor
Joseph B. Howe
By Roberts, Cushman & Woodbury
his Attorneys.

Jan. 21, 1936. J. B. HOWE 2,028,544

AUTOMATIC WEIGHING MACHINE

Filed March 28, 1933 6 Sheets-Sheet 3

Fig. 4

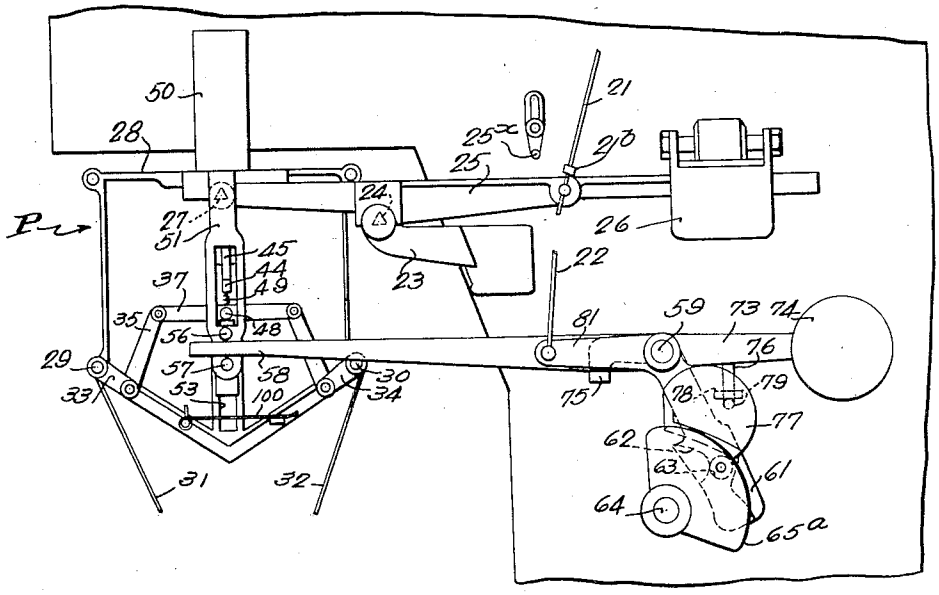

Fig. 5

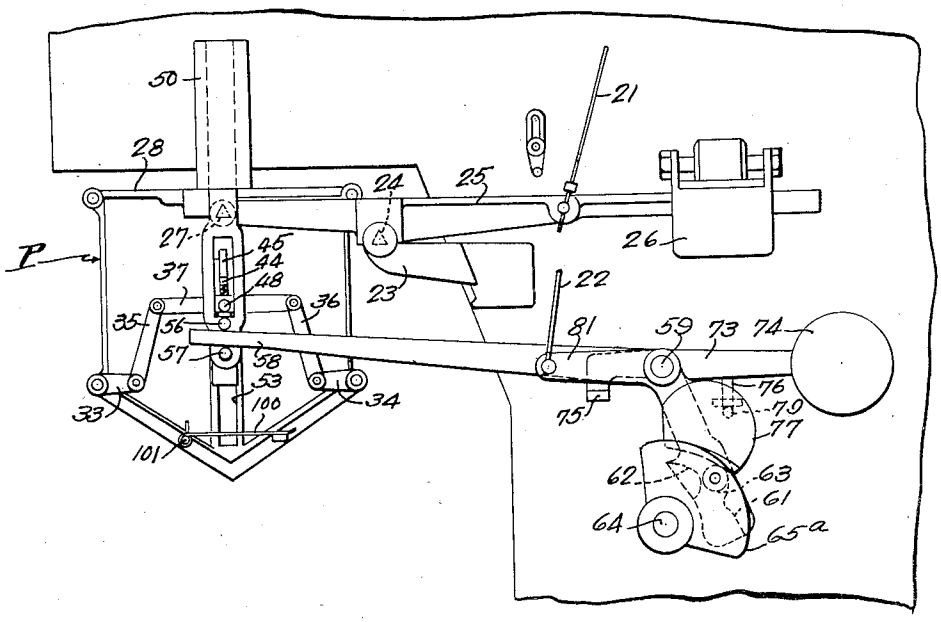

Inventor
Joseph B. Howe
By Roberts, Cushman & Woodberry
His Attorneys

Jan. 21, 1936. J. B. HOWE 2,028,544

AUTOMATIC WEIGHING MACHINE

Filed March 28, 1933 6 Sheets-Sheet 4

Fig. 6

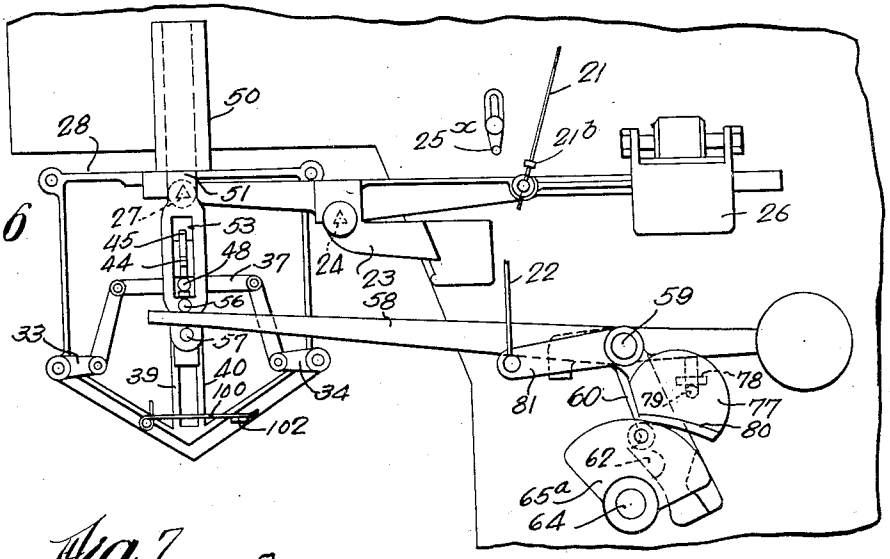

Fig. 7

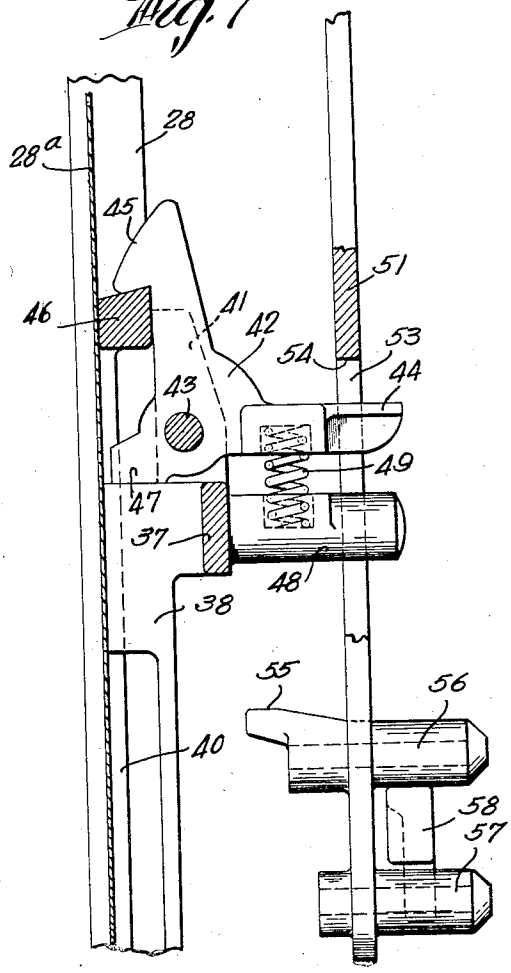

Fig. 8

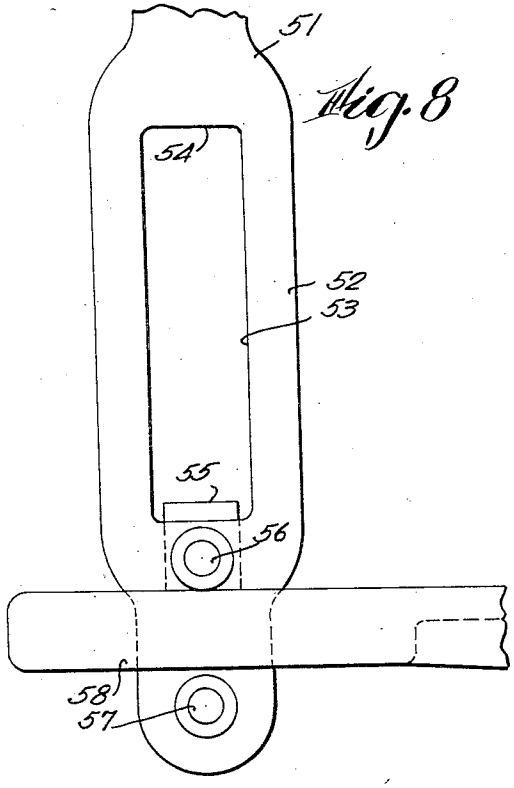

Inventor
Joseph B. Howe
By Pollard, Cushman & Woolley
His Attorneys

Jan. 21, 1936. J. B. HOWE 2,028,544

AUTOMATIC WEIGHING MACHINE

Filed March 28, 1933 6 Sheets-Sheet 5

Fig. 9

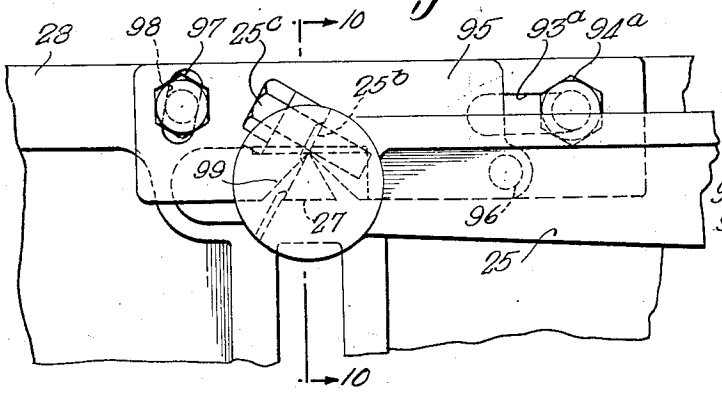

Fig. 10

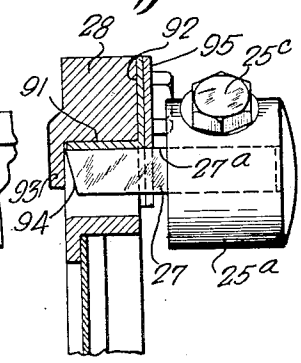

Fig. 11

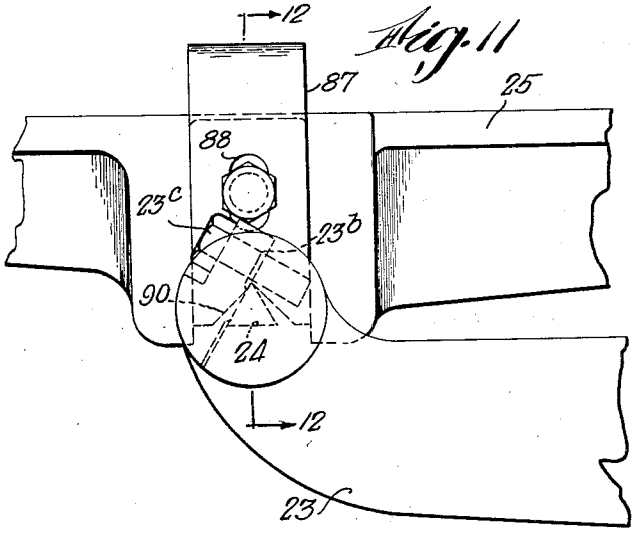

Fig. 12

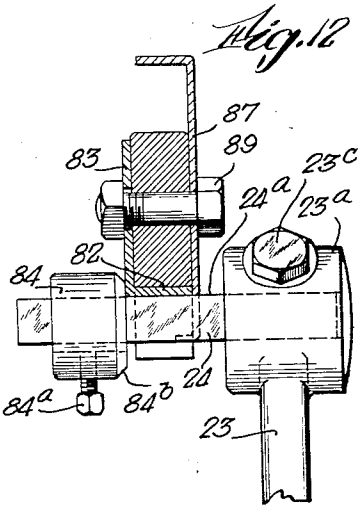

Fig. 13

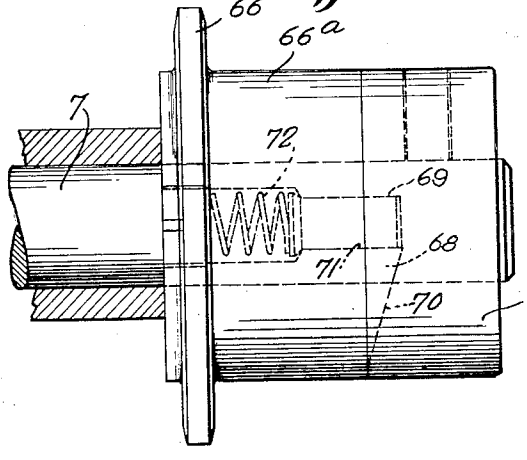

Fig. 14

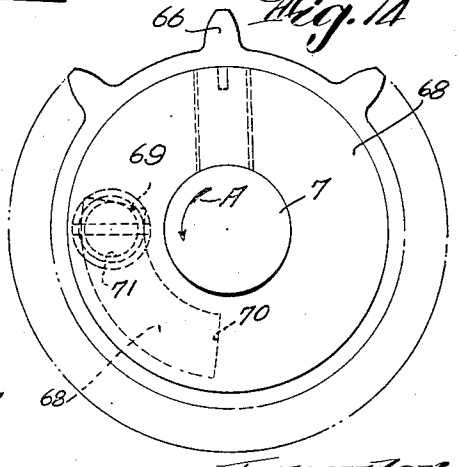

Inventor
Joseph B. Howe
By Roberts Cushman & Woodbury
his Attorneys

Jan. 21, 1936. J. B. HOWE 2,028,544

AUTOMATIC WEIGHING MACHINE

Filed March 28, 1933 6 Sheets-Sheet 6

Fig. 15

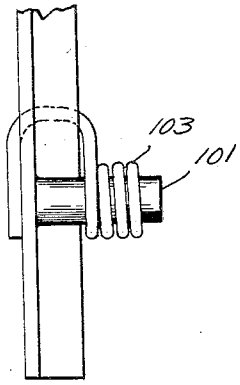

Fig. 16

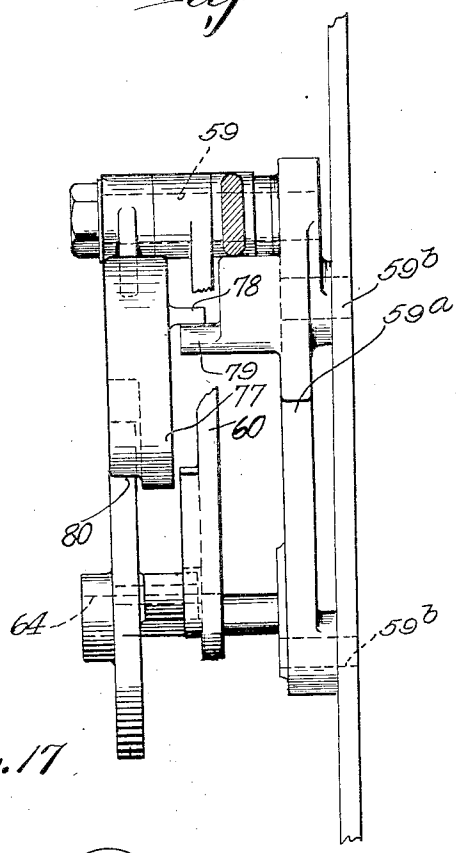

Fig. 17

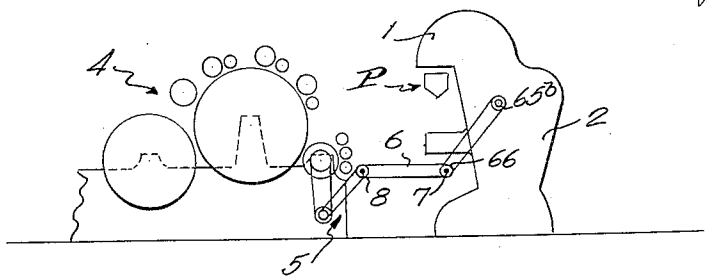

Inventor
Joseph B. Howe
By Pollock, Cushman & Woodbury
his Attorneys.

Patented Jan. 21, 1936

2,028,544

UNITED STATES PATENT OFFICE

2,028,544

AUTOMATIC WEIGHING MACHINE

Joseph B. Howe, Worcester, Mass., assignor to Geo. S. Harwood & Son, Boston, Mass., a co-partnership composed of John H. Harwood and John H. Harwood, Jr.

Application March 28, 1933, Serial No. 663,113

30 Claims. (Cl. 249—42)

This invention pertains to automatic weighing machines and as herein illustrated by way of example is embodied in a machine for weighing and delivering textile fiber to a carding machine. In my Patents No. 1,859,444, dated May 24, 1932; No. 1,675,756, dated July 3, 1928; No. 1,531,945, dated March 31, 1925; No. 1,531,944, dated March 31, 1925; and No. 1,434,053, dated October 31, 1922, I have disclosed certain improvements in weighing mechanism of the class described, designed primarily to eliminate errors and to increase the accuracy of the weighing operation whereby to insure greater uniformity in product than was possible with prior apparatus.

However, observation of the operation of my patented mechanism under commercial conditions has led me to the production of the further improvements hereinafter set forth and which form the subject matter of the present invention, such improvements being illustrated as embodied in a machine of the kind specifically disclosed in my aforesaid Patent No. 1,675,756 in which a single lever acts both to initiate the dumping of the pan and also to reset the pan in its load-receiving position.

Since it is desirable to make the hinged bottom members of the pan as light as possible, it is usual to form them of sheet metal, but when these bottom members swing open, the sudden arrest of the parts at the end of their travel has been found to whip the bottom members out of shape so that they do not meet properly when closed. Accordingly, a further embodiment of the invention is to provide means for damping the blow when the bottom members of the pan swing open so as to avoid injury to or distortion of the parts.

Since my improved weighing mechanism as disclosed herein and/or as shown in my aforesaid patents is sometimes applied to existing machines, it has sometimes been found that unskilled assemblers mount the several pivot elements of the controlling mechanism improperly with reference to each other, thus interfering with the effective or proper operation of the device. To avoid such possibility, the present invention provides a portable unit comprising a support having certain of the pivot elements mounted thereon in proper relation, and this support with its pivot elements may be shipped to the user and attached to the machine frame as a unit, thus avoiding any danger of improper relative location of the several pivotal axes.

In prior practice it has been common to form the fulcrums for the pan and beam respectively from round rod stock sharpened to a V-edge, but it is not easy to set and maintain such a rod in the exact position desired, and in accordance with the present invention I avoid this difficulty by employing a piece of polygonal rod, for example, triangular, firmly clamped in an opening of substantially the same shape,—using one of the corners of the rod as a knife edge. When one of such corners become dull, the rod may be withdrawn from its clamp and turned through the proper angle to present another of its corners to act as the knife edge.

As those parts of the scale beam and pan frame which rest on the knife edges are usually made of cast iron, they tend to wear quite rapidly, and to lessen wear at these points, I provide wear pieces, preferably of some hard steel alloy, secured to the pan and beam, respectively, and preferably adjustable so as to permit them to be set accurately with reference to the knife edges on which they rest.

In the arrangement disclosed in my Patent No. 1,675,756, the single lever which controls the opening and resetting of the pan is obliged to move through a large arc in performing its several functions, and in so doing it tends to exert a side thrust on the pan at some parts of its path of movement, thus causing the pan to swing, and when once started, the oscillation of the pan may increase by reason of the vibration of the machine, for example, until the center of gravity of the pan moves so far from normal position that the scale beam will tip prematurely. In accordance with the present invention, I provide an improved latch and latch release mechanism so arranged that the latch parts themselves are located in the vertical plane of the pan axis, thus balancing the pan itself, and at the same time the release mechanism is so designed that only a relatively short arc of movement of the lever arm is necessary, and restraining elements are provided so that any side thrusts which do develop are exerted against parts which are independent of the pan so that such thrusts have no effect upon the pan itself.

In machines of this general type it is common to drive the pan-dumping mechanism by direct connections to the carding machine, thereby to insure proper speed ratios of the two mechanisms. Under some circumstances it becomes necessary to turn the feed rolls of the carding mechanism backward, for example, for cleaning, but when using the usual drive connections to the card feeder, such backward movement of the card is impossible (without disconnecting the parts) by

reason of interference between some of the driven parts of the card feeder. In accordance with the present invention the drive connections between the card and the card feeder are so arranged as to permit reverse motion of the card without reversing the card feeder mechanism. The present invention also provides an improved drive mechanism for the push board which is used for advancing material toward the card after the material has been dumped from the pan, and the invention also provides improved guide means for the material on its way to the pan.

The above objects and features of improvement, as well as certain other improvements hereinafter referred to, are illustrated in a preferred embodiment by way of example in the accompanying drawings, in which

Fig. 1 is a fragmentary elevation of the right-hand end of a card feeder embodying my present invention showing the scale pan closed and in position to receive a load of material;

Fig. 2 is a fragmentary elevation showing the position of the weighing mechanism after the scale beam has tilted in response to a load in the pan and just prior to dumping;

Fig. 3 is a view similar to Fig. 2, but showing the scale pan at the instant of dumping;

Fig. 4 is a view similar to Fig. 3, but showing the scale beam restored to weighing position and the scale pan partly closed;

Fig. 5 is a view similar to Fig. 4, but showing the pan fully closed and the parts positioned to latch the pan with its bottom members closed;

Fig. 6 is a view similar to Fig. 5, but showing the scale actuating parts all restored substantially to normal position, but illustrating the action of the clutch controlling elements in restarting delivery of material to the pan;

Fig. 7 is a vertical section substantially on the line 7—7 of Fig. 1 illustrating the pan latch and cooperating parts;

Fig. 8 is a fragmentary elevation to large scale illustrating the lower portion of the pan-steadying and latch-releasing and pan-closing member;

Fig. 9 is a fragmentary elevation showing an improved fulcrum support for the scale pan;

Fig. 10 is a section on the line 10—10 of Fig. 9;

Fig. 11 is a fragmentary elevation illustrating an improved fulcrum support for the scale beam;

Fig. 12 is a section on the line 12—12 of Fig. 11;

Fig. 13 is an elevation partly in section showing an improved drive connection for the scale-actuating parts;

Fig. 14 is an end elevation of the parts shown in Fig. 13;

Fig. 15 is a fragmentary detailed view illustrating a preferred arrangement for supporting the buffer spring which cushions the shock of opening the pan;

Fig. 16 is an elevation, partly in section showing the supporting unit for the scale-dumping mechanism, and the parts carried thereby; and

Fig. 17 is a diagram illustrating the relation of the card feeder and card.

Referring to the drawings, and in particular to Fig. 17, the numeral 1 indicates one of the end frames of a card feeder of the well known Bramwell type, such feeder having a bin 2 into which the fibrous material is dumped, and a scale pan P into which the material is delivered for weighing. After weighing, the material is dumped from the scale pan onto a traveling apron 6 carried by endless chains on sprocket wheels on shafts 7 and 8. This traveling apron delivers the material to the carding machine 4. In the present instance the shaft 8 is driven by means of suitable connections 5 from the carding machine 4 so that the card feeder parts move in definite timed relation to the motions of the carding mechanism. While as here illustrated the shaft 8 is the one which receives motion directly from the card, it is to be understood that other appropriate connections may be employed for driving the parts of the card feeder in consonance with operation of the card.

Referring to Fig. 1, the frame of the card feeder is shown as having a forwardly extending bracket 5 which supports the bearings for the shafts 7 and 8, while the upper part of the frame is provided with bearings for the shaft 12 carrying a roller (not shown) supporting the upper part of an endless spike apron 14 which, in usual manner, picks up the fibrous material from the bin 2 and raises it for delivery to the scale pan. The shaft 12, with the spike apron, is driven by means of a pulley 13 about which a belt (not shown) passes, such belt receiving its motion from a pulley on a shaft (not herein shown) but which is driven through connections to the shaft 7.

As here illustrated, the machine frame is provided at its opposite ends with bearings for a pair of parallel shafts 15 and 15a, respectively, which support an endless stripping apron (not shown) adapted to receive the fiber from the spike apron and to carry it downwardly for delivery to the pan. Preferably an inclined guide 16 is so arranged with respect to this delivery apron as to receive the material from the latter and guide it for delivery into the pan at a point substantially above the fulcrum axis of the latter.

Interposed between the pulley 13 and the shaft 12 is a clutch mechanism including the wheel 17 having peripheral teeth 18, which may be engaged at times by a dog 19 thereby disengaging the clutch parts and permitting the spike apron to come to rest. The dog 19 is herein illustrated as controlled by a trip mechanism, indicated at 20, such as is more fully described in the patent to Howe, No. 1,859,444. This trip mechanism includes a trip rod 21 whose lower end passes freely through an opening in a boss 21a carried by the scale beam and which is provided with a fixed collar 21b above the boss for engagement by the latter when the scale beam tips. The trip mechanism also comprises a resetting rod 22 connected at its lower end to a resetting lever 31, hereinafter more fully described.

Each end frame of the machine carries a bracket 23 supporting a fulcrum pin 24, the two fulcrum pins being aligned with each other and providing knife edge supports for the composite scale beam consisting of two parallel lever arms 25, but one of which is shown. For convenience in further description, the single arm 25 which is shown, will be referred to as the "scale beam". This scale beam is provided with a counterbalance weight 26 at one end, and at the other carries a fulcrum pin 27 providing a knife edge support for the scale pan P.

This scale pan is preferably of the type more fully described in the patent to Howe No. 1,675,756, comprising end frames 28, which may be castings, held in spaced relation, if desired, by longitudinal rods, and which support side and end walls 28a of sheet metal or other suitable material, and movable bottom closure members which also may be of sheet metal. The end frames of the pan provide bearings for two parallel shafts 29 and 30 to which the bottom closures 31

and 32, respectively, are fixedly secured. Each of these shafts is provided with a crank arm 33 and 34, respectively, at one end, and these crank arms are connected by links 35 and 36 to the opposite ends, respectively, of a vertically movable equalizer bar 37. This equalizer bar (Fig. 7) is secured at its central part to a vertically movable slide member 38 guided between ribs 39 and 40 forming a part of the end frame of the pan, the ribs being spaced apart to provide a guideway for the slide 38. As thus arranged the two closure members are constrained to turn through substantially equal angles, thus insuring quick dumping and accurate closing.

The upper end of the slide 38 (which constitutes a latch carrier) is provided with a pair of spaced upstanding lugs 41 between which a latch member 42 is arranged. This latch member is pivoted on a pin 43 secured in the lugs 41 and is furnished with an actuating tail 44 projecting outwardly away from the end of the pan, and with a latching hook 45 adapted to engage an abutment 46 extending between and uniting the rib members 39 and 40 near their upper ends. The latch is also furnished with a downwardly extending stop member 47 adapted to engage the upper end of the slide 38, thereby to limit movement of the latch hook 45 toward the end of the pan.

A pan-closing pin 48 projects outwardly from the upper part of the slide 37, substantially in the vertical plane of the latch tail 44, and a compression spring 49 is interposed between the pin 48 and the tail 44, such spring being conveniently seated in pockets in the opposing faces of the pin and tail and normally tending to swing the latch in a counterclockwise direction as viewed in Fig. 7.

The upper part of the end frame of the machine is furnished with a bracket 50 whose lower end may, if desired, project downwardly below the overhang of the frame and in position to engage the upper member of the end frame of the pan, thereby to limit upward movement of the pan. This guide member 50 is furnished with a vertically extending guideway which receives the upper part of a vertically elongate slide member 51, the guideway being of such length as to constrain the slide member 51 to move in a rectilinear path and in a vertical direction, even though the lower part of this slide member projects well below the lower part of the guide bracket. This slide member 51 is provided with a transversely widened portion 52 having a vertical slot 53 into which project the latch tail 44 and the pan-closing pin 48. The sides of this slot are so spaced that, while permitting free up and down movement of the pin 48, they limit lateral movement of the pin and thus prevent the pan from oscillating to an undesirable extent about its fulcrum 27. The upper end wall 54 of the slot, and a part 55 adjacent to the lower end of the slot 53 constitute latch-releasing and pan-closing elements, respectively, but in the normal load-receiving position of the parts these elements are spaced substantially from the latch tail 44 and the pin 48, respectively, so as not to interfere with the free movement of the pan in a vertical direction during the weighing operation.

It may be noted that the latch tail 44, the pin 48, and the slot 53 in the slide 51 are all disposed substantially in the vertical plane of the fulcrum 27 and that the various parts which are supported by the pan fulcrum are all substantially symmetrical with respect to the vertical plane of the fulcrum so that there is no unbalanced weight or other force tending to tip the pan one way or the other.

Near its lower end the slide 51 is provided with a pair of forwardly projecting pins 56 and 57, respectively, which may, if desired, be furnished with anti-friction rollers, the pin 56 having a rearward extension providing the pan-closing element 55. One arm 58 of a pan-dumping and pan-closing lever is disposed between the pins 56 and 57 (or between the rollers carried by such pins if the rollers are employed). This dumping and pan-closing lever is a bell crank lever including the arm 58 and a second arm 60, and is fulcrumed to turn on a stub shaft 59 (Figs. 1 and 16) supported by a plate 59^a adapted to be secured to the end frame of the machine by means of bolts 59^b. The lever arm 60 carries a pair of spaced cam members 61 and 62 (Fig. 2) which are adapted to be engaged successively by a crank member 63, which may consist of a pin with an anti-friction roller mounted thereon, carried by a rotary member 65^a turning on a stub shaft 64 also mounted on the plate 59^a. This crank 63 is eccentric to the axis of the shaft 64 and turns in a counterclockwise direction, as indicated by the arrow B in Fig. 2, and in so turning first engages the cam 61, thereby to raise the arm 60 and depress the arm 58, and subsequently engages the cam 62, thereby to depress the arm 60 and raise the arm 58. The part 65^a is secured to a sprocket wheel 65^b concentric with the shaft 64, and this sprocket wheel is driven by a chain 65 passing about a sprocket wheel 66 coaxial with the shaft 7.

Referring to Figs. 13 and 14, the shaft 7 is shown as furnished at its forward end with a fixed collar 67 having an arcuate slot or recess 68 in its inner radial face. This slot or recess 68 is furnished at one end with the abrupt shoulder 69 but gradually decreases in depth, as shown at 70, Fig. 13. The sprocket wheel 66 is provided with a sleeve 66^a, one end of which abuts the collar 67, and this sleeve is furnished with a pocket which receives a sliding clutch pin 71 which is urged outwardly by means of a spring 72 so that its end normally projects into the recess 68. When the shaft 7 turns in the direction of the arrow A (Fig. 14), the abrupt shoulder 69 of the collar 67 engages the pin 71 and turns the sprocket wheel in the same direction, but if for any reason the carding machine should be reversely driven so as to turn the shaft 7 reversely, the pin 71 will ride up on the inclined surface 70 of the recess 68 and will thus fail to drive the sprocket wheel and the card feeder mechanism so that the latter will remain idle.

The stub shaft 59 carries a second lever having an arm 73 provided with the counterweight 74, and this arm normally rests upon a fixed stop 76 carried by the machine frame. The lever 73 also has a second arm which extends along and substantially parallel to the arm 58 of the pan-dumping lever and is provided near its end with a toe portion 75 which underlies the arm 58. This arrangement is such that during the pan-filling operation the arm 58 is supported by the toe 75 in its mid or neutral position, as shown in Fig. 1. However, if the arm 58 is depressed, it will at the same time raise the weighted arm 73, but if arm 58 is raised above the normal position it recedes from the toe 75.

The stub shaft 59 carries a third lever having a weighted arm 77 provided with the stop lug 78

(Fig. 16) which normally rests upon a stop or abutment 79 projecting from the machine frame. This third lever, which is a restarting lever for the spike apron, is provided with a cam surface 80 adapted at times to be engaged by the crank member 63, thereby to lift the weighted arm 77, and is also provided with an arm 81 to which the lower end of the trip resetting rod 22 is pivotally connected.

Referring to Figs. 9 to 12, the bracket 23 which supports the fulcrum 24 for the scale beam is furnished with an apertured boss 23^a at its upper end, such boss having an opening, here shown as of substantially triangular cross section, and having its wall split to provide for expansion or contraction of this opening. This split in the wall is indicated at 23^b (Fig. 11) and the walls of the boss, at opposite sides of the split, may be drawn toward each other by means of a clamping bolt 23^c. The fulcrum member 24 preferably consists of a bar of hard steel or other suitable wear-resistant material, preferably polygonal, and, as here shown, triangular in cross section. One end of this triangular bar is seated in the opening in the boss 23^a and is firmly clamped therein by means of the bolt 23^c although it may be removed by loosening the bolt. The arrangement of the opening is such that when the bar is inserted therein, one of its corners is directed upwardly to form the knife edge 24^a. By removing this bar from the boss, it may be turned and reinserted in the opening so as to present a fresh edge or corner to serve as the knife edge.

As the scale beam is usually made of cast iron or other relatively soft material, it is preferred to provide a wear-resistant member for engagement with the knife edge 24^a. This wear-resistant member, as here disclosed, preferably consists of a piece of sheet metal of the desired wear-resistant qualities, for example, alloy steel, nitrided steel, or the like, having a horizontal flange 82 which underlies the lower edge of the scale beam 25 and which provides a flat, substantially horizontal undersurface to rest on the knife edge 24^a. The wear-resistant member also has a vertical flange 83 disposed against the rear side of the scale beam 25 and has an opening for the reception of a bolt 89 securing it to the scale beam. Preferably an adjustable stop collar member 84, is secured to the free end of the fulcrum bar 24 by means of a set screw 84^a. The end face of the stop collar is preferably beveled at 84^b and bears against the flange 83 of the wear pin. This collar limits the movement of the scale beam toward the bracket 23, and as a similar arrangement is provided at each end of the machine, it is obvious that the composite scale beam may be adjusted relatively to the machine frame, and when once adjusted is prevented from moving longitudinally of the knife edges.

In order to prevent the scale beam from moving transversely of the knife edge, a retainer member 87 is provided. This retainer member consists of a piece of sheet metal slotted at 88 for the reception of an attaching bolt 89 by which it is secured to the front face of the scale beam. The lower edge of this retainer member 87 is provided with a V-notch having divergent side walls 90 making a larger angle with each other than do the sides of the fulcrum bar, thus permitting the scale beam to tilt freely without interference, but at the same time serving to prevent bodily movement of the scale beam transversely of the knife edge.

That end of the scale beam which supports the fulcrum pin 27 is furnished with a split boss 25^a, split at 25^b (Fig. 9) and having a clamping bolt 25^c adapted removably to secure the fulcrum pin 27 in the boss. This fulcrum pin, like the fulcrum pin 24 previously described, preferably is a triangular bar of hardened steel with one of its corners directed upwardly to form the knife edge 27^a. This knife edge engages the under flat surface of a wear-resistant member comprising the lower horizontal flange 91 underlying the top member 28 of the end frame of the scale pan and having a vertical flange 92 disposed against the front face of the member 28. The member 28 is furnished with a downwardly directed toe 93 disposed opposite to the free end 94 of the fulcrum bar 27 for the purpose of preventing endwise displacement of the scale pan along the knife edge 27^a. To prevent accidental transverse displacement of the scale pan relatively to the knife edge, a retainer 95 is provided. This retainer preferably consists of a piece of sheet metal pivotally secured at 96 to the flange 92 of the wear-resistant member and having a curved slot at 97 which receives an adjusting bolt 98. This retainer is furnished with a wide V-notch 99 permitting free tipping of the scale pan about its fulcrum, but at the same time preventing bodily transverse movement of the pan. To facilitate the initial balancing of the pan on its fulcrum, it is preferable to make the wear-resistant member adjustable lengthwise of the member 28, and for this purpose the flange 92 may have an elongate slot 93^a which receives a clamping bolt 94^a.

When the scale pan latch is released, the bottom closures 31 and 32, together with the crank arms 33 and 34, the links 35 and 36, the equalizer bar 37, and the slide 38, all drop freely to allow the contents of the pan to fall, but in so dropping they acquire considerable momentum, and if their movement is suddenly arrested, there is a tendency to whip the pan closures 31 and 32 out of shape so that they do not thereafter close accurately. In order to cushion the downward blow of the moving parts, I prefer to provide a cushioning spring, having a resilient arm 100, consisting, for example, of a piece of spring wire coiled at one end to form coils 103 about a pin 101 projecting from the end frame of the pan and having its free extremity 101^a resting upon a boss 102, also projecting from the end frame of the pan. When the slide 38 drops, the pin 57 engages this spring arm at about the mid point of the latter and thus the blow is cushioned and the pan closures are protected against injury.

The rotating member 65^a which carries the crank 63 is furnished on its forward side with a crank pin 104 to which one end of a connecting rod 105 is secured. At its opposite end this connecting rod 105 is connected to one arm 106 of a bell crank lever pivoted on a stub shaft 107 carried by the machine frame. This bell crank has a second arm 108 connected by a link 109 to the push board 110 which, in usual manner, is guided to slide in a rectilinear path by means of guide members projecting into guideways 111 carried by the frame at opposite sides of the endless moving apron or belt 6.

In the normal operation of the machine, that is to say, while the pan is receiving its load, the parts occupy substantially the position shown in Fig. 1. In this position the scale beam 25 is substantially horizontal, the upper member of the pan is resting against the lower end of the guide 50, the dog 19 is disengaged from the teeth 18

so that the spike apron driving mechanism is in action, thereby raising the material from the bin for delivery to the pan, the lever arm 58 is substantially horizontal, the latch hook 45 engages the abutment 46, thus holding the pan closures in closed position, and the crank pin 63 is at that portion of its path in which it does not operatively engage either of the cams 61, 62 or 80.

As the pan receives its load, there comes a time when the load in the pan counterbalances the weight 26 and thereupon the pan drops until the scale beam 25 engages the stop 25^x secured to the end frame of the machine. This downward movement of the scale pan is freely permitted by reason of the clearance between the pin 48 and the member 55 at the lower end of the slot 53 in the slide 51. As the scale pan descends, the boss 21^a of the scale beam engages the collar 21^b, thus raising the trip rod 21 and causing the dog 19 to engage the teeth 18, thus stopping the shaft 12 and the further delivery of material by the spike apron.

During the above operations the rotating member 65^a has been turning slowly in a counterclockwise direction in accordance with the speed of operation of the carding machine and eventually the crank 63 engages the cam 61, as shown in Fig. 2. Continued rotation of the crank 63, by cooperation with the cam 61, raises the lever arm 60, thus moving the arm 58 downwardly and thereby moving the slide 51 downwardly until the upper wall 54 of the slot 53 comes into contact with the tail 44 of the latch, thus disengaging the latch from the abutment 46. The weight of the parts now causes the slide 38 with the equalizer bar 37 to descend, thereby opening the pan closures and allowing the material to fall freely onto the traveling apron 6. In moving downward, the arm 58 carries with it the toe 75, thus lifting the weight 74, and as the crank 63 passes the cam 61, the weight 74 immediately tends to restore the arm 58 to its normal substantially horizontal position, thus raising the slide 51 to the position shown in Fig. 4. This movement of the slide, assisted by the weight 26, restores the pan to its normal uppermost position, at the same time partially closing the bottom members 31 and 32 (Fig. 4). Continued movement of the crank 63 now brings it into operative contact with the cam 62, thereby depressing the arm 60 and positively raising the arm 58 to the position shown in Fig. 5. This moves the slide 51 upwardly to a sufficient extent to bring the member 55 into engagement with the pin 48 and to carry the latter up to a point such that the latch hook 45 is enabled to engage the abutment 46 just as the members 31 and 32 reach their closed position, so that the pan is now ready to receive a new load of material.

As the crank 63 leaves the cam 61, as above described, and before it fully engages the cam 62, it comes into contact with the surface 80 of the restarting lever, but this cam suurface 80 is so shaped that the arm 77 is not effectively raised until after the crank 63 has fully depressed the cam 62 and thus closed and locked the pan. Thereafter continued movement of the crank 63 so elevates the part 77 as to depress the arm 81, thereby pulling down on the resetting rod 22 and thus retracting the dog 19 from teeth 18, whereupon the spike apron is immediately started into operation to deliver more material to the pan. It may be noted that with the arrangement provided, a single crank member 63 successively dumps the pan, closes and locks the pan, and starts the spike apron into operation, but that the latter operation can not take place until the pan is fully closed and locked.

When the crank pin 63 runs off of the cam 62, the arm 58 immediately drops until it is caught by the toe 75 and is thereby supported in its central or neutral position. This movement of the arm 58 restores the slide 51 to its normal position, wherein the latch tail 44 and the pin 48 are free from contact with the spaced elements 54 and 55 of the slide 52.

As above described, the stub shaft 59 and the stub shaft 64 are carried by a plate 59^a which is independent of the end frame of the machine, and thus this plate with the parts carried thereby, if desired, may be assembled to form a unit which may be properly set up and adjusted at the factory and shipped for application to an existing machine, with the assurance that the parts will be properly related so as to obtain the desired relative timing of the several actions.

By the connections herein described the motion of the push board 110 is made more uniform and less jerky than in accordance with usual arrangements, since in this case its forward or operative motion is produced by a pulling action rather than a pushing action.

It will be noted, as above referred to, that the scale pan locking and releasing parts are all symmetrical with respect to the pivotal axis of the pan so that the opening and closing of the pan does not tend to set up violent oscillations either in the pan or in the scale beam, while at the same time the pan is balanced so that it does not tend to tilt in one direction or the other during filling. Furthermore, the present arrangement is such as to prevent the pan from being oscillated in response to side thrust exerted by the pan-dumping and resetting lever, the slide member 51 acting as a stabilizer and guide, so that the pan is prevented from oscillating in response to any such eccentric thrust, and thus accuracy of weighing is greatly enhanced as compared with prior arrangements.

While I have herein illustrated one desirable embodiment of the invention by way of example, it is to be understood that substitutions of material and of equivalents, and a rearrangement of parts may be made without departing from the spirit of the invention, and while the invention is herein illustrated as applied to a card feeder, certain of its features are equally applicable to mechanism useful for automatically weighing other materials.

I claim:

1. Weighing mechanism of the class described having in combination a scale beam and a scale pan fulcrumed thereon, means providing a substantially vertical fixed guideway, a slide member arranged to slide vertically in said guideway, and means normally spaced from said slide member, but operative to engage said slide member at all positions of the scale beam and pan for preventing excessive sway of the pan about its fulcrum axis.

2. Weighing mechanism of the class described having a scale beam, a scale pan, means on the beam providing a pivotal axis for the pan, a pair of closure members pivoted to turn about axes parallel to that of the pan and symmetrically disposed relatively to the pan axis, a slide member, and means guiding said slide member so that elements thereof move in the vertical plane of the pan axis, means connecting the slide

member to each of the closure members, releasable latch means for holding the slide member in elevated position with the closure member closed, and a latch releasing element guided to move substantially in the vertical plane of the pan axis.

3. Weighing mechanism of the class described having in combination a scale beam and a scale pan, the beam having a fulcrum support providing a pivotal axis for the pan and the pan having a movable bottom closure, a slide member so guided that elements thereof move substantially in the vertical plane of the pan axis, means connecting said slide member to the closure, latch means normally retaining the slide member in position to hold the closure in closed position, and release means for releasing the latch means to permit the closure to open, said release means comprising an element guided to move substantially in the vertical plane of the pan axis.

4. Weighing mechanism of the class described having in combination a scale beam and a scale pan fulcrumed thereon, said pan having an end member and a relatively movable bottom closure, a movable latch carrier, means connecting the bottom closure to the latch carrier, a latch mounted on the latch carrier, an abutment carried by the end member of the pan with which the latch engages in one position of the latch carrier thereby to hold the bottom closure in closed position, and a latch releasing slide moving in fixed guides and comprising a release element moving substantially in the vertical plane of the pan axis.

5. Weighing mechanism of the class described having in combination a scale beam and a scale pan, the beam having a fulcrum support providing a pivotal axis for the pan and the pan having an end member and a relatively movable bottom closure, a slide member carried by the pan, means guiding the slide member to move in a predetermined path, means connecting the slide member to the closure, a latch member on the slide member, an abutment carried by the end member of the pan with which the latch member normally engages, thereby to hold the closure in closed position, and release means for releasing the latch member from the abutment, said release means comprising an element which moves in a path substantially in the vertical plane of the pan axis.

6. Weighing mechanism of the class described having a scale beam, a scale pan, means on the beam providing a pivotal axis for the pan, a pair of closure members pivoted to turn about axes parallel to that of the pan and symmetrically disposed relatively to the pan axis, a slide member and means guiding said slide member to move in the vertical plane of the pan axis, means connecting the slide member to each of the closure members, a pin projecting from the slide member substantially in the vertical plane of the pan axis, and means cooperable with the pin to prevent excessive sway of the pan while permitting free vertical movement of the slide member.

7. Weighing mechanism of the class described having in combination a scale beam and a scale pan, the beam having a fulcrum support providing a pivotal axis for the pan and the pan having a movable bottom closure, a slide member carried by the pan, means guiding the slide member to move up and down in a predetermined path, a pivoted latch mounted on the slide member, an abutment carried by the pan, a spring tending to swing the latch member into position to engage the abutment, a stop operative to limit movement of the latch by its spring, and means for disengaging the latch from the abutment thereby to permit the slide member to descend and allow the closure to open.

8. Weighing mechanism of the class described having a scale beam, a scale pan, means on the beam providing a pivotal axis for the pan, a pair of closure members pivoted to turn about axes parallel to that of the pan and symmetrically disposed relatively to the pan axis, a slide member and means guiding said slide member to move in the vertical plane of the pan axis, means connecting the slide member to each of the closure members, releasable latch means substantially in the vertical plane of the pan axis normally operative to hold the slide member in elevated position with the closure members closed, and means for releasing the latch means, thereby to permit the slide member to descend and the pan to open.

9. Weighing mechanism of the class described having a scale beam, a scale pan, means on the beam providing a pivotal axis for the pan, a pair of closure members pivoted to turn about axes parallel to that of the pan and symmetrically disposed relatively to the pan axis, a slide member and means guiding said slide member to move in the vertical plane of the pan axis, means connecting the slide member to each of the closure members, retaining means comprising a movable latch member on the slide member for holding the slide member in elevated position with the pan closed, said latch having a projecting tail and means engageable with the latch tail for releasing the latch thereby to permit the slide member to descend and the pan to open.

10. Weighing mechanism of the class described having in combination a scale beam and a scale pan, the beam having a fulcrum support providing a pivotal axis for the pan and the pan having a movable bottom closure, a slide member carried by the pan, means guiding the slide member to move up and down substantially in the plane of the fulcrum point of the pan, a pivoted latch mounted on the slide member, an abutment carried by the pan with which the latch normally engages, thereby to hold the closure in closed position, a spring tending to hold the latch in engagement with the abutment, a tail projecting from the latch, and means engageable with the latch tail for swinging the latch out of engagement with the abutment.

11. Weighing mechanism of the class described having a scale beam, a scale pan, means on the beam providing a pivotal axis for the pan, a pair of closure members pivoted to turn about axes parallel to that of the pan and symmetrically disposed relatively to the pan axis, a slide member and means guiding said slide member to move in the vertical plane of the pan axis, means connecting the slide member to each of the closure members, a latch on the slide member, means with which the latch normally engages to hold the slide member in elevated position with the pan closed, a latch releasing tail projecting from the latch and a pin projecting from the slide member, both tail and pin being substantially in the vertical plane of the pan axis, and a vertically movable member having an element engageable with the tail to release the latch thereby to permit the slide member to drop and the pan to open, said vertically movable member

also having an element engageable with the pin to elevate the slide member and thereby to close the pan.

12. Weighing mechanism of the class described having a scale beam, a scale pan, means on the beam providing a pivotal axis for the pan, a pair of closure members pivoted to turn about axes parallel to that of the pan and symmetrically disposed relatively to the pan axis, a slide member and means guiding said slide member to move in the vertical plane of the pan axis, means connecting the slide member to each of the closure members, a latch on the slide, an abutment with which the latch normally engages to hold the slide elevated and the pan closed, a latch-releasing tail projecting from the latch and a pin projecting from the slide member, a vertically movable guide having an elongate slot to which the latch tail and the pin project, and means for moving the guide downwardly to cause the upper wall of its slot to engage the latch tail and thereby release the latch, and to move the guide member upwardly thereby to cause the lower wall of its slot to engage the pin and elevate the slide member.

13. Weighing mechanism of the class described having a scale beam, a scale pan, means on the beam providing a pivotal axis for the pan, a pair of closure members pivoted to turn about axes parallel to that of the pan and symmetrically disposed relatively to the pan axis, a slide member and means guiding said slide member to move in the vertical plane of the pan axis, means connecting the slide member to each of the closure members, a pivoted latch carried by the slide member, an abutment with which the latch normally engages when the slide is in elevated position, a latch-releasing tail projecting from the latch and a pin projecting from the slide member, a vertically moving guide constraining the slide member to move in a vertical path, a pair of pins projecting from said vertically movable guide member, a lever arm disposed between said pins, and a cam for moving said lever arm up and down, said guide having elements engageable with the latch tail and pin respectively, as said guide member is moved upwardly and downwardly by the lever.

14. Weighing mechanism of the class described having a scale beam, a scale pan, means on the beam providing a pivotal axis for the pan, a pair of closure members pivoted to turn about axes parallel to that of the pan and symmetrically disposed relatively to the pan axis, a slide member, and means guiding said slide member to move in the vertical plane of the pan axis, means connecting the slide member to each of the closure members, and means cooperable with said slide member to prevent excessive sway of the pan about its axis.

15. Weighing mechanism of the class described having a scale beam, a scale pan, means on the beam providing a pivotal axis for the pan, a pair of closure members pivoted to turn about axes parallel to that of the pan and symmetrically disposed relatively to the pan axis, a slide member and means guiding said slide member to move in the vertical plane of the pan axis, means connecting the slide member to each of the closure members, a releasable latch normally holding the slide member in elevated position with the pan closed, and means operative to release the latch thereby to permit the slide member to descend and the pan to open, and means operative thereafter to elevate the slide member thereby to close the pan and reengage the latch.

16. Weighing mechanism of the class described having a scale beam, a scale pan, means on the beam providing a pivotal axis for the pan, a pair of closure members pivoted to turn about axes parallel to that of the pan and symmetrically disposed relatively to the pan axis, a slide member and means guiding said slide member to move in the vertical plane of the pan axis, means connecting the slide member to each of the closure members, a pin projecting from the slide member substantially in the vertical plane of the pan axis, and a guide member substantially fixed as respects lateral movement and having a vertically elongate slot for the reception of said pin, the lateral walls of the slot being so spaced as to permit free vertical movement of the pin while preventing substantial lateral movement thereof.

17. A card feeder having weighing mechanism including a dumping scale pan provided with a movable closure, and a latch normally locking the closure in closed position, said latch having an operating tail, a pan-closing pin, a slide mounted in guides and having elements normally spaced from the latch tail and from the pan-closing pin, respectively, during the weighing operation, a single lever arranged to move said slide in opposite directions, and a single rotating part operative to tilt the lever whereby to move the slide first in one direction and then in the other.

18. A machine of the class described comprising a scale beam and a scale pan supported thereby, the pan having a movable closure, a latch normally operative to retain the closure in closed position, a vertically movable slide member having elements operative respectively during the down and up movement of said slide to release the latch so that the pan may open, and to close the pan respectively, a single lever engaging said slide member, cam elements carried by the lever, and a single moving part engageable successively with said cam elements for moving the lever positively in opposite directions.

19. A card feeder having weighing mechanism including a dumping scale pan provided with a latch controlled movable closure normally locked in closed position, a member for releasing the closure latch, a pan-closing member, a slide arranged to slide in fixed guides and comprising elements normally spaced from the latch release member and from the pan-closing member, respectively, during the weighing operation, a single lever arranged to move said slide and thereby bring said elements into operative engagement with the latch release member and the pan-closing member respectively, and a single rotating part operative to actuate the lever.

20. A machine of the class described comprising a scale beam and a scale pan supported thereby, the pan having a movable closure, a latch normally operative to retain the closure in closed position, a vertically movable slide member having elements operative, respectively, during the down and up movements of said slide to release the latch, so that the pan may open, and to close the pan respectively, a single lever engaging said slide member, a pair of spaced cam elements mounted on the lever, a moving part operative first by engagement with one of said cam elements to tilt the lever thereby to move the slide and release the latch, said moving part thereafter engaging the other cam element and

thereby tilting the lever to move the slide so as to close the pan.

21. A machine of the class described comprising a scale beam and a scale pan supported thereby, the pan having a movable closure, a latch normally operative to retain the closure in closed position, a vertically movable slide member having elements operative, respectively, during the down and up movements of said slide to release the latch so that the pan may open and to close the pan respectively, a single lever engaging said slide member, a pair of spaced cam elements mounted on the lever, a moving part operative first by engagement with one of said cam elements to tilt the lever thereby to move the slide and release the latch, said moving part thereafter engaging the other cam element and thereby tilting the lever to move the slide so as to close the pan, and means operative during the interval between engagement of the several cams by said moving part to restore the lever to its normal position.

22. In combination in a card feeder of the kind having fiber delivery means, devices for starting and stopping the delivery means, a dumping scale pan arranged to receive fiber from the delivery means, a scale beam supporting the pan, a movable closure for the pan, a releasable latch for the closure, and means responsive to downward movement of the pan and beam when loaded with fiber to stop the delivery means, a single rotating drive member, and actuating means operative successively to release the latch, to open the pan, to close the pan and to restart the delivery means, said actuating means comprising a single rotating part acting at different points in its path to initiate said several operations.

23. In combination in a card feeder of the kind having fiber delivery means, devices for starting and stopping the delivery means, a dumping scale pan arranged to receive fiber from the delivery means, a scale beam supporting the pan, a movable closure for the pan, a releasable latch for the closure, and means responsive to downward movement of the pan and beam when loaded with fiber to stop the delivery means, a single rotating drive member, a lever having an arm operative by downward or upward movement, respectively, to release the latch and open the pan, and to close the pan, said lever having a pair of spaced cams so arranged with respect to said rotating drive member as to be engaged successively by the latter thereby first to swing the lever arm upwardly and then downwardly, a second lever, connections between said latter lever and the devices for starting and stopping the delivery means, and a part carried by said second lever and so disposed in the path of said rotating drive member as to be operatively engaged thereby to restart the delivery mechanism after the pan has been closed.

24. In combination in a card feeder of the kind having fiber delivery means, devices for starting and stopping the delivery means, a dumping scale pan arranged to receive fiber from the delivery means, a scale beam supporting the pan, a movable closure for the pan, a releasable latch for the closure, and means responsive to downward movement of the pan and beam when loaded with fiber to stop the delivery means, a single rotating drive member, a lever having a pair of spaced cams disposed in the path of said rotating member and engageable successively by the latter, the lever moving in response to such engagement and thereby first releasing the latch to dump the pan and then close the pan, and a third cam engageable by said rotating member thereby to restart the delivery means after the pan has been closed.

25. A card feeder operative to deliver fibrous material at a predetermined rate to a carding machine, said card feeder comprising a weighing scale having a dumping pan, pan dumping means comprising a rotary drive member, and uni-directional drive connections from the card for turning said drive member so long as the card is driven forwardly, said connections permitting reverse operation of the card without reversely turning the drive member.

26. A card feeder operative to deliver fibrous material at a predetermined rate to a carding machine, said card feeder comprising a weighing scale having a dumping pan, pan-dumping means comprising a rotary drive member, and connections from the card for driving said member, said connections comprising a uni-directional clutch transmission operative to turn the drive member in the forward direction when the card is operating in normal manner, but to leave the drive member idle when the card is reversed.

27. A card feeder operative to deliver fibrous material at a predetermined rate to a carding machine, said card feeder comprising a weighing scale havng a dumping pan, pan-dumping means comprising a drive member, and means for transmitting movement from the card to the drive member for turning the latter, said transmitting means comprising a unidirectional positive clutch operative to turn the drive member in the forward direction during normal operation of the card, but to slip and allow the drive member to remain idle when the card is reversed.

28. A card feeder comprising a dumping scale pan, power driven pan loading mechanism, and means for dumping the pan, an endless apron arranged to receive material dumped from the pan, a pair of substantially parallel shafts arranged to support and drive the apron, means, independent of the pan loading mechanism, for turning one of said shafts, a unidirectional clutch comprising a driving element turning with the other of said shafts, a driven element, and means operated by said driven element for operating the pan-dumping means.

29. Control means for the dumping scale pan of a card feeder comprising a support, a plurality of stub shafts carried thereby, a pan-dumping and closing lever mounted on one shaft, a rotary drive element mounted on the other shaft, and means whereby the support with its stub shafts may be attached as a unit to the frame of a card feeder.

30. Control means for the dumping scale pan of a card feeder having intermittently operating delivery mechanism, said control means comprising a support, a plurality of shafts carried by the support, a plurality of levers mounted on one of said shafts, one of said levers being operative to dump the pan and thereafter to close the pan, and another of said levers being operative to restart the delivery mechanism after stopping, a rotary drive element mounted on the other shaft and operative to actuate the several levers on the first shaft, and means for attaching the support with its shafts as a unit to the frame of a card feeder.

JOSEPH B. HOWE.